PLOTTED: 05/11/2026
PLOT STYLE: ----

CITY OF HOUSTON

HOUSTON PUBLIC WORKS CAPITAL PROJECTS

WHITE OAKS WASTEWATER TREATMENT PLANT IMPROVEMENTS

60% SUBMITTAL

WBS NO. R-000265-0158-3

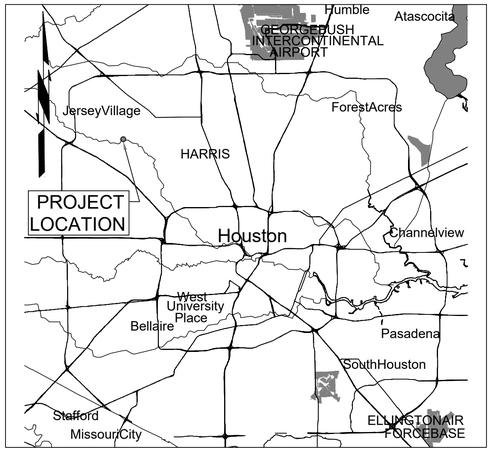

LOCATION MAP

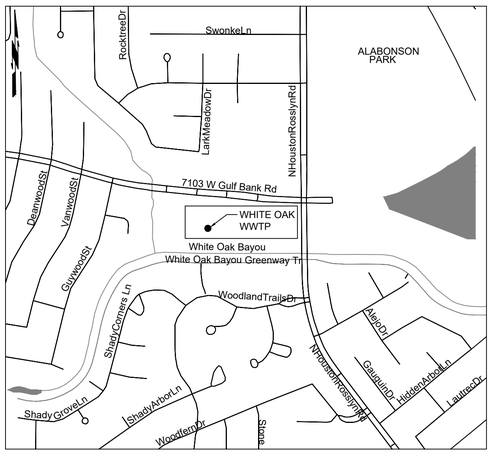

VICINITY MAP
KEY MAP NO ### X
GIMS MAP NO ### X

TDLR EABPR _____

MAYOR
JOHN WHITMIRE

CONTROLLER
CHRIS HOLLINS

DISTRICT COUNCIL MEMBERS

AMY PECK, DISTRICT A
TARSHA JACKSON, DISTRICT B
JOE PANZARELLA, DISTRICT C
CAROLYN EVANS–SHABAZZ, DISTRICT D
FRED FLICKINGER, DISTRICT E
TIFFANY D. THOMAS, DISTRICT F
MARY NAN HUFFMAN, DISTRICT G
MARIO CASTILLO, DISTRICT H
JOAQUIN MARTINEZ, DISTRICT I
EDWARD POLLARD, DISTRICT J
MARTHA CASTEX–TATUM, DISTRICT K

COUNCIL MEMBERS AT–LARGE

JULIAN RAMIREZ, POSITION 1
WILLIE DAVIS, POSITION 2
TWILA CARTER, POSITION 3
ALEJANDRA SALINAS, POSITION 4
SALLIE ALCORN, POSITION 5

NO.	DATE	REVISION	APP.

MBROH ENGINEERING
11757 KATY FWY,
SUITE 625
HOUSTON, TX 77077
713-468-2545

SURVEYED BY:
FB NO.

THESE DOCUMENTS ARE FOR INTERIM REVIEW AND ARE NOT INTENDED FOR CONSTRUCTION, BIDDING, OR PERMIT PURPOSES.
HANS POURES
TEXAS P.E. NO. 131630
DATE: 11/5/2026

CITY OF HOUSTON
HOUSTON PUBLIC WORKS

WHITE OAKS
WWTP IMPROVEMENTS
GENERAL
COVER SHEET

WBS NUMBER	FOR CITY OF HOUSTON USE ONLY
R-000265-0158-3	
DRAWING SCALE	
NONE	
CITY OF HOUSTON PM	
SHAHIDUR RAHMAN, PE	
G-00 SHEET NO. OF	

FILE PATH: P:\Projects\0106 – City Of Houston\20031 – White Oak WWTP Phase II\4.0 CAD\4.2 Electrical\G-00 COVER SHEET.dwg

DRAWING INDEX

SEQ. NO.	DWG. NO.	DESCRIPTION
GENERAL		
1	G–00	COVER SHEET
2	G–01	DRAWING INDEX - I
3	G–02	DRAWING INDEX - II
SURVEY		
4	G–04	SWINGTIES SHEET 1 OF 1
5	G–03	SURVEY CONTROL MAP SHEET 1 OF 1
6	G–05	W.O.W.W.T.P. TOPOGRAPHIC SURVEY 1 OF 3
7	G–06	W.O.W.W.T.P. TOPOGRAPHIC SURVEY 2 OF 3
8	G–07	W.O.W.W.T.P. TOPOGRAPHIC SURVEY 3 OF 3
CIVIL		
9	C–01	GENERAL NOTES
10	C–02	DEMOLITION PLAN SHEET 1
11	C–03	DEMOLITION PLAN SHEET 2
12	C–04	PROPOSED SITE PLAN
13	C–05	GRADING AND DRAINAGE DETAIL PLAN SHEET 1
14	C–06	GRADING AND DRAINAGE PLAN SHEET 2
15	C–07	YARD PIPING PLAN AND PROFILE
16	C–08	SWPP PLAN SHEET 1
17	C–09	SWPP PLAN SHEET 2
18	C–10	SWPP DETAILS
19	C–11	DETAILS
PROCESS MECHANICAL		
20	M–01	LEGEND
21	M–02	OVERALL PLAN
22	M–03	DEMOLITION PLAN CLARIFIER SPLITTER BOX STOPLOGS
23	M–04	DEMOLITION PLAN WAS PUMP STATION
24	M–05	DEMOLITION PLAN BLOWER BUILDING
25	M–06	AERATION BASIN IMPROVEMENT 1
26	M–07	AERATION BASIN IMPROVEMENT 2
27	M–08	AERATION BASIN IMPROVEMENT 3
28	M–09	WAS PUMP STATION PLAN
29	M–10	WAS PUMP STATION SECTIONS
30	M–11	PROPOSED BLOWER BUILDING PLAN
31	M–12	PROPOSED BLOWER BUILDING SECTION A
32	M–13	PROPOSED BLOWER BUILDING SECTION B
33	M–14	SECONDARY CLARIFIER IMPROVEMENT 1
34	M–15	SECONDARY CLARIFIER IMPROVEMENT 2 – PLAN
35	M–16	SECONDARY CLARIFIER IMPROVEMENT 2 – SECTION
36	M–17	SODIUM HYPOCHLORITE SYSTEM IMPROVEMENT
STRUCTURAL		
37	S–01	STRUCTURAL NOTES I
38	S–02	STRUCTURAL NOTES II
39	S–03	STRUCTURAL NOTES III
40	S–04	STRUCTURAL NOTES IV
41	S–05	SPECIAL INSPECTIONS I
42	S–06	SPECIAL INSPECTIONS II
43	S–07	SPECIAL INSPECTIONS III
44	S–08	PROJECT SYMBOLS & ABBREVIATIONS
45	S–09	ELECTRICAL SERVICE PLATFORM PLAN
46	S–10	ELECTRICAL SERVICE PLATFORM SECTIONS AND DETAILS I
47	S–11	ELECTRICAL SERVICE PLATFORM SECTIONS AND DETAILS II
48	S–12	BLOWER BUILDING FOUNDATION PLAN
49	S–13	BLOWER BUILDING INTERMEDIATE PLAN AT 88.40
50	S–14	BRIDGE CRANE FRAMING PLAN
51	S–15	ROOF FRAMING PLAN
52	S–16	OVERALL SECTION I
53	S–17	OVERALL SECTION II
54	S–18	OVERALL SECTION III
55	S–19	CONCRETE SECTIONS AND DETAILS I
56	S–20	CONCRETE SECTIONS AND DETAILS II
57	S–21	CONCRETE SECTIONS AND DETAILS III
58	S–22	CONCRETE SECTIONS AND DETAILS IV
59	S–23	STEEL SECTIONS AND DETAILS I
60	S–24	STEEL SECTIONS AND DETAILS II
61	S–25	STEEL SECTIONS AND DETAILS III
62	S–26	STEEL SECTIONS AND DETAILS IV
63	S–27	AERATION BASIN FOUNDATION PLAN
64	S–28	AERATION BASIN UPPER PLAN
65	S–29	AERATION BASIN ELEVATIONS I
66	S–30	AERATION BASIN ELEVATIONS II
67	S–31	AERATION BASIN ELEVATIONS III
68	S–32	AERATION BASIN ELEVATIONS IV
69	S–33	AERATION BASIN SECTIONS AND DETAILS
70	S–34	CLARIFIERS FOUNDATION PLAN
71	S–35	CLARIFIERS UPPER PLAN

SEQ. NO.	DWG. NO.	DESCRIPTION
STRUCTURAL (CONTINUED)		
72	S–36	CLARIFIERS ELEVATIONS I
73	S–37	CLARIFIERS ELEVATIONS II
74	S–38	CLARIFIERS ELEVATIONS III
75	S–39	CLARIFIERS ELEVATIONS IV
76	S–40	CLARIFIERS ELEVATIONS V
77	S–41	CLARIFIERS ELEVATIONS VI
78	S–42	CLARIFIERS ELEVATIONS VII
79	S–43	CLARIFIERS SECTIONS AND DETAILS I
80	S–44	CLARIFIERS SECTIONS AND DETAILS II
81	S–45	WAS PUMP STATION DEMOLITION PLAN
82	S–46	WAS PUMP STATION MODIFICATION PLAN
83	S–47	WAS PUMP STATION SECTIONS AND DETAILS I
84	S–48	WAS PUMP STATION SECTIONS AND DETAILS II
85	S–60	TYPICAL STRUCTURAL DETAILS I
86	S–61	TYPICAL STRUCTURAL DETAILS II
87	S–62	TYPICAL STRUCTURAL DETAILS III
88	S–63	TYPICAL STRUCTURAL DETAILS IV
89	S–64	TYPICAL STRUCTURAL DETAILS V
90	S–65	TYPICAL STRUCTURAL DETAILS VI
91	S–66	TYPICAL STRUCTURAL DETAILS VII
92	S–67	TYPICAL STRUCTURAL DETAILS VIII
93	S–68	TYPICAL STRUCTURAL DETAILS IX
94	S–69	TYPICAL STRUCTURAL DETAILS X
95	S–70	TYPICAL STRUCTURAL DETAILS XI
ARCHITECTURAL		
96	A–01	SITE PLAN
97	A–02	BLOWER BUILDING FLOOR PLAN
98	A–03	BLOWER BUILDING ELEVATIONS
99	A–04	BLOWER BUILDING ELEVATIONS
100	A–05	BLOWER BUILDING SECTION
101	A–06	BLOWER BUILDING SECTION
102	A–07	BLOWER BUILDING ROOF PLAN
103	A–08	BLOWER BUILDING REFLECTED CEILING PLAN
104	A–09	ROOF DETAILS
105	A–10	ROOF DETAILS
106	A–11	ANALYZER BUILDING FLOOR PLAN
107	A–12	EXTERIOR WALLS & DOORS REPAIRS
108	A–13	EXTERIOR DOOR SCHEDULE
HVAC		
109	H–01	LEGENDS SYMBOLS AND ABBREVIATIONS
110	H–02	BLOWER BUILDING FLOOR PLAN
111	H–03	BLOWER BUILDING SECTION
112	H–04	BLOWER BUILDING PERSPECTIVES
113	H–05	ADMINISTRATION BUILDING DEMOLITION PLAN
114	H–06	ADMINISTRATION BUILDING NEW PLAN
115	H–07	LIFT STATION DEMOLITION PLAN
116	H–08	LIFT STATION NEW PLANS
117	H–09	SCUM PUMP STATION DEMOLITION PLAN
118	H–10	SCUM PUMP STATION NEW PLAN
119	H–11	SCUM PUMP STATION PERSPECTIVE
120	H–12	LIFT STATION MCC BUILDING DEMOLITION PLAN
121	H–13	LIFT STATION MCC BUILDING NEW PLAN
PLUMBING		
122	P–01	LEGENDS SYMBOLS AND ABBREVIATIONS
123	P–02	BLOWER BUILDING DRAINAGE PLAN
124	P–03	CHEMICAL STORAGE DEMOLITION PLAN
125	P–04	CHEMICAL STORAGE NEW PLAN
ELECTRICAL		
126	E–01	GENERAL NOTES
127	E–02	LEGENDS SYMBOLS & ABBREVIATIONS – I
128	E–03	LEGENDS SYMBOLS & ABBREVIATIONS – II
129	E–04	OVERALL DEMOLITION ELECTRICAL SITE PLAN
130	E–05	DEMOLITION – PARTIAL SITE PLAN I
131	E–06	DEMOLITION – PARTIAL SITE PLAN II
132	E–07	DEMOLITION – BLOWER BUILDING ELECTRICAL PLAN
133	E–08	DEMOLITION – WAS ELECTRICAL BUILDING PLAN
134	E–09	DEMOLITION – WAS POWER PLAN
135	E–10	DEMOLITION – ANALYZER BUILDING PLAN
136	E–11	MODIFIED – OVERALL SITE PLAN
137	E–12	MODIFIED – PARTIAL SITE PLAN I
138	E–13	MODIFIED – PARTIAL SITE PLAN II
139	E–14	MODIFIED – PARTIAL SITE PLAN III
140	E–15	MODIFIED – ELECTRICAL SERVICE ENTRANCE POWER PLAN
141	E–16	MODIFIED – ELECTRICAL SERVICE ENTRANCE CONTROL PLAN
142	E–17	MODIFIED – BLOWER BUILDING POWER PLAN

NO.	DATE	REVISION	APP.

MBROH ENGINEERING
11757 KATY FWY,
SUITE 625
HOUSTON, TX 77077
713-468-2545

SURVEYED BY:

FB NO.

THESE DOCUMENTS ARE FOR INTERIM REVIEW AND ARE NOT INTENDED FOR CONSTRUCTION, BIDDING, OR PERMIT PURPOSES.

HANS POURES

TEXAS P.E. NO. 131630

DATE: 10/14/2026

CITY OF HOUSTON
HOUSTON PUBLIC WORKS

WHITE OAKS
WWTP IMPROVEMENTS

GENERAL

DRAWING INDEX -I

WBS NUMBER	FOR CITY OF HOUSTON USE ONLY
R-000265-0158-3	
DRAWING SCALE	
1" = 40'	
CITY OF HOUSTON PM	
SHAHIDUR RAHMAN, PE	
SHEET NO. 2 OF 189	

G-01

PLOTTED: 19/10/2026

PLOT STYLE: ----

FILE PATH: P:\Projects\0106 – City Of Houston\20031 – White Oak WWTP Phase II\4.0 CAD\4.2 Electrical\E-04 OVERALL DEMOLITION ELECTRICAL SITE PLAN.dwg

DRAWING INDEX

SEQ. NO.	DWG. NO.	DESCRIPTION
ELECTRICAL (CONTINUED)		
143	E–18	MODIFIED – BLOWER BUILDING LIGHTING PLAN
144	E–19	MODIFIED – BLOWER BUILDING CONTROL PLAN
145	E–20	MODIFIED – WAS POWER PLAN
146	E–21	MODIFIED – WAS CONTROL PLAN
147	E–22	MODIFIED – ANALYZER BUILDING POWER PLAN
148	E–23	MODIFIED – ANALYZER BUILDING CONTROL PLAN
149	E–24	MODIFIED – ANALYZER BUILDING LIGHTING PLAN
150	E–25	MODIFIED – OVERALL SITE GROUNDING
151	E–26	MODIFIED – SERVICE ENTRANCE GROUNDING PLAN
152	E–27	MODIFIED – BLOWER BUILDING GROUNDING PLAN
153	E–28	MODIFIED – ANALYZER BUILDING GROUNDING PLAN
154	E–29	DEMOLITION – ONE–LINE MCC–1 & MCC–1A
155	E–30	DEMOLITION – ONE–LINE MCC–2
156	E–31	DEMOLITION – ONE–LINE MCC–3
157	E–32	DEMOLITION – ONE–LINE MCC–4
158	E–33	MODIFIED – ONE–LINE MCC–1
159	E–34	MODIFIED – ONE–LINE MCC–2
160	E–35	MODIFIED – ONE–LINE MCC–3
161	E–36	MODIFIED – CONDUIT SCHEDULE
162	E–37	DEMOLITION PANEL SCHEDULES
163	E–38	MODIFIED PANEL SCHEDULES I
164	E–39	STANDARD DETAILS I
165	E–40	STANDARD DETAILS II
166	E–41	STANDARD DETAILS III
167	E–42	STANDARD DETAILS IV
168	E–43	STANDARD DETAILS V
169	E–44	STANDARD DETAILS VI
170	E–45	STANDARD DETAILS VII
171	E–46	STANDARD DETAILS VIII
172	E–47	STANDARD DETAILS IX
173	E–48	STANDARD DETAILS X
INSTRUMENTATION		
174	I–01	GENERAL NOTES & LEGEND
175	I–02	EXISTING SYSTEM ARCHITECTURE
176	I–03	MODIFIED SYSTEM ARCHITECTURE
177	I–04	CHEMICAL STORAGE AND DECHLORINATION BUILDING
178	I–05	EMERGENCY GENERATOR I
179	I–06	EMERGENCY GENERATOR II
180	I–07	AERATION BLOWERS P&ID
181	I–08	WAS PUMP STATION P&ID
182	I–09	EXISTING DECHLORINATION PLC PANEL ENCLOSURE
183	I–10	EXISTING DECHLORINATION PLC PANEL LAYOUT
184	I–11	WAS PUMP PLC PANEL ENCLOSURE
185	I–12	WAS PUMP PLC PANEL LAYOUT
186	I–13	BLOWER MASTER PLC PANEL ENCLOSURE
187	I–14	BLOWER MASTER PLC PANEL LAYOUT
188	I–15	INSTALLATION DETAILS I
189	I–16	INSTALLATION DETAILS II

NO.	DATE	REVISION	APP.

MBROH ENGINEERING
11757 KATY FWY,
SUITE 625
HOUSTON, TX 77077
713-468-2545

SURVEYED BY:
FB NO.

THESE DOCUMENTS ARE FOR INTERIM REVIEW AND ARE NOT INTENDED FOR CONSTRUCTION, BIDDING, OR PERMIT PURPOSES.
HANS POURES
TEXAS P.E. NO. 131630
DATE: 10/14/2026

CITY OF HOUSTON
HOUSTON PUBLIC WORKS

WHITE OAKS
WWTP IMPROVEMENTS
GENERAL
DRAWING INDEX -II

WBS NUMBER	FOR CITY OF HOUSTON USE ONLY
R-000265-0158-3	
DRAWING SCALE	
1" = 40'	
CITY OF HOUSTON PM	
SHAHIDUR RAHMAN, PE	
SHEET NO. 3 OF 189	

G-02

PLOTTED: 19/10/2026
PLOT STYLE: ----
FILE PATH: P:\Projects\0106 – City Of Houston\20031 – White Oak WWTP Phase II\4.0 CAD\4.2 Electrical\E–04 OVERALL DEMOLITION ELECTRICAL SITE PLAN.dwg

PLOTTED: 19/10/2026
PLOT STYLE: ----
FILE PATH: P:\Projects\0106 - City Of Houston\20031 - White Oak WWTP Phase II\4.0 CAD\4.2 Electrical\E-04 OVERALL DEMOLITION ELECTRICAL SITE PLAN.dwg

CONTROL PT. #1

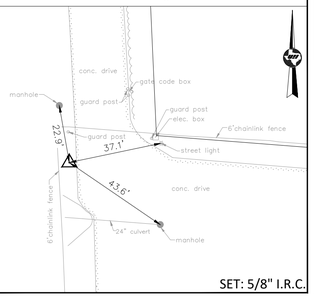

SET: 5/8" I.R.C.

CONTROL PT. #2

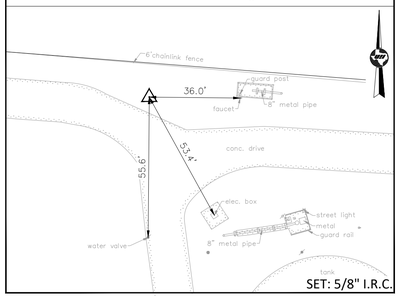

SET: 5/8" I.R.C.

CONTROL PT. #3

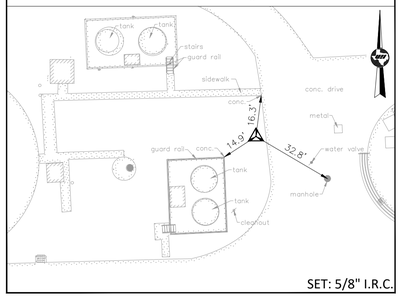

SET: 5/8" I.R.C.

CONTROL PT. #4

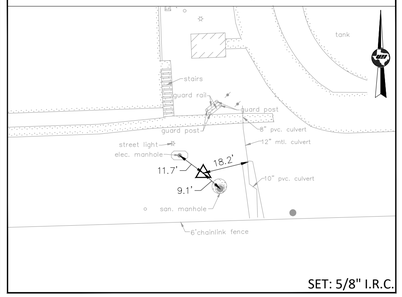

SET: 5/8" I.R.C.

CONTROL PT. #5

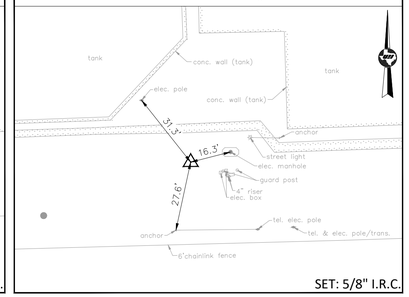

SET: 5/8" I.R.C.

CONTROL PT. #6

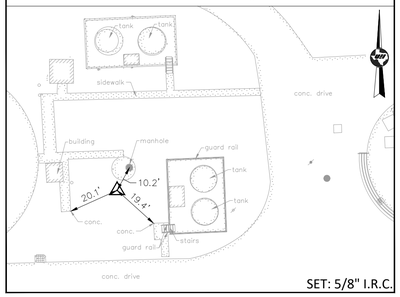

SET: 5/8" I.R.C.

CONTROL PT. #7

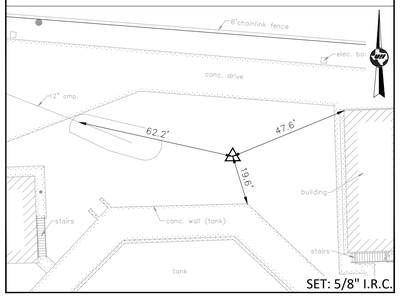

SET: 5/8" I.R.C.

CONTROL PT. #8

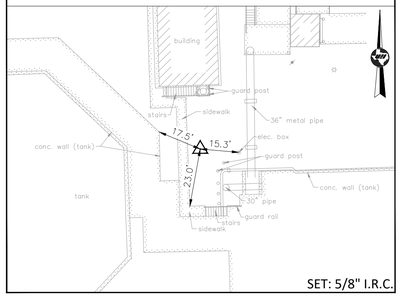

SET: 5/8" I.R.C.

CONTROL PT. #9

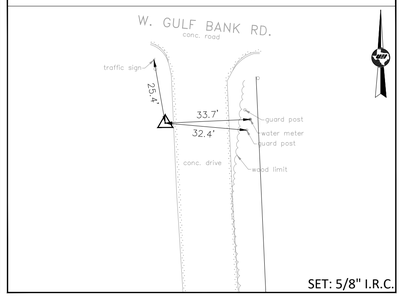

SET: 5/8" I.R.C.

CONTROL PT. #10

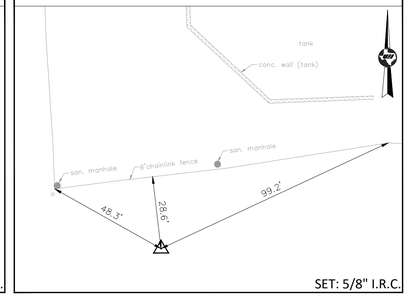

SET: 5/8" I.R.C.

CONTROL PT. #11

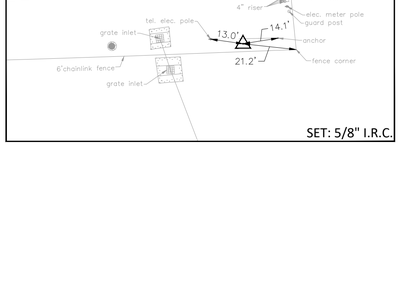

SET: 5/8" I.R.C.

CONTROL PT. #12

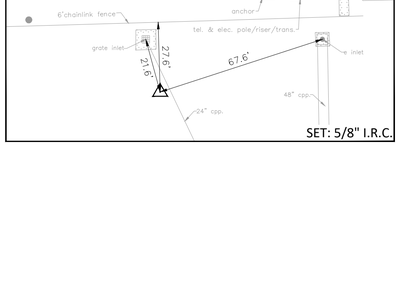

SET: 5/8" I.R.C.

CONTROL PT. #15

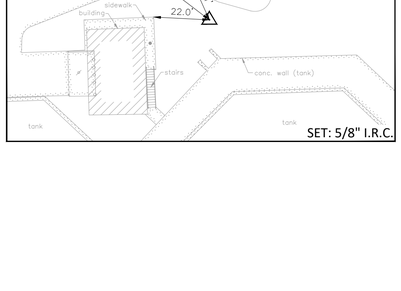

SET: 5/8" I.R.C.

LEGEND:

- PROPERTY LINE
- 10' U.E. EASEMENT
- RIGHT-OF-WAY / PROPERTY LINE
- (TRV.) N 00° 00' 00" E. TRAVERSE LINE
- (BL.) N 00° 00' 00" E. BASELINE
- 5989 RIGHT OF WAY MONUMENTS

GENERAL NOTES:
CP= indicates Traverse Point
BP# indicates Baseline Point
(TRV.) indicates Traverse Line
(BL) indicates Baseline Line
CM indicates Control Monument
Fnd. indicates Found
RT indicates Right
LT indicates Left
XC indicates 'X' Cut
I.P. indicates Iron Pipe
I.R. indicates Iron Rod
I.R.C. indicates Iron Rod w/Cap
P.I.P. indicates Pinch Iron Pipe
MAG indicates MAG Nail
U.T.S. indicates unable to set
PC indicates Point of Curve
PCC indicates Point of Compound Curvature
PT indicates Point of Tangent
TBM indicates Temporary Benchmark
#XXXX indicates Address
W.L.E. indicates Water Line Easement
U.E. indicates Utility Easement
S.S.E. indicates Sanitary Sewer Easement
S.E. indicates Storm Sewer Easement
B.L. indicates Building Line
M.R.H.C., TX. indicates Map Records Harris County, Texas
D.R.H.C., TX. indicates Deed Records Harris County, Texas
H.C.C.F. indicates Harris County Clerk's File
O.P.R.R.P.H.C., TX, indicates Official Public Records Real Property Harris County, Texas

NOTES:

1. ALL BEARINGS AND COORDINATES SHOWN HEREON ARE TIED TO THE NSRS AND EXPRESSED IN THE TEXAS COORDINATE SYSTEM, SOUTH CENTRAL ZONE 4204, NAD 83' (2011), ITRF (EPOCH 2010.0000), NAVD '88 (GEOID 99).
2. ALL DISTANCES SHOWN HEREON ARE SURFACE VALUES. ALL COORDINATES SHOWN HEREON ARE GRID VALUES UNLESS OTHERWISE NOTED. TO CONVERT SURFACE VALUES TO GRID VALUES MULTIPLY BY THE SCALE FACTOR OF 0.999870017.
3. THE RIGHT OF WAY SHOWN HEREON IS BASED ON THE BEST AVAILABLE EVIDENCE FOUND IN THE FIELD AT THE TIME OF THE SURVEY COUPLED WITH THE DOCUMENTS OF RECORD IN THE COUNTY CLERK'S OFFICE PROVIDED BY COURTHOUSE SPECIALISTS.
4. TO CONVERT ELEVATIONS FROM NAVD 88' (GD 99) DATUM TO NAVD 88' (GD 18) SUBTRACT 0.42 FEET. HELD TSARP 050085 FOR CONVERSION FACTOR.
5. THE TRACTS OF LAND SHOWN ON THIS ALIGNMENT MAP LIE WITHIN ZONE AE (SHADED) AS SHOWN ON THE FEDERAL EMERGENCY MANAGEMENT AGENCY FLOOD INSURANCE MAP, ACCORDING TO PANEL #465 OF 1150, FIRM MAP NUMBER 48201C0465M FOR HARRIS COUNTY, TEXAS, AND INCORPORATED AREAS. REVISED JUNE 9, 2014.

NO.	DATE	REVISION	APP.

CERTIFICATION:

I HEREBY CERTIFY THAT: (1) THIS PLAT WAS PREPARED FROM AN ON THE GROUND SURVEY MADE UNDER MY SUPERVISION; (2) THAT THIS PLAT CORRECTLY REPRESENTS THE FACTS FOUND AT THE TIME OF SURVEY; (3) THAT THIS PLAT AND THE SURVEY IT REPRESENTS, CONFORMS TO THE REQUIREMENTS OF THE LAND SURVEYING PRACTICES ACT IN EFFECT AT THE TIME OF THE SURVEY FOR THE TYPE OF PROFESSIONAL SERVICE SO STATED.

TYPE OF PROFESSIONAL SERVICE: TOPOGRAPHIC AND R.O.W. SURVEY

CHRISTIN M. NORRIS, R.P.L.S. 6207 DATE

INTERIM REVIEW ONLY
Document incomplete: Not intended for permit or construction.
Surveyor: Christin M. Norris
TX R.P.L.S. No. 6207
Date: 06/05/2026

MBROH 20 ENGINEERING
11757 KATY FWY,
SUITE 625
HOUSTON, TX 77077
713-468-2545

SURVEYED BY:
FB NO.

THESE DOCUMENTS ARE FOR INTERIM REVIEW AND ARE NOT INTENDED FOR CONSTRUCTION, BIDDING, OR PERMIT PURPOSES.
HANS POURES
TEXAS P.E. NO. 131630
DATE: 10/14/2026

CITY OF HOUSTON
HOUSTON PUBLIC WORKS

WHITE OAKS WWTP IMPROVEMENTS

SURVEY

SWINGTIES
SHEET 1 OF 1

WBS NUMBER	FOR CITY OF HOUSTON USE ONLY
R-000265-0158-3	
DRAWING SCALE	
1" = 40'	
CITY OF HOUSTON PM	
SHAHIDUR RAHMAN, PE	
SHEET NO. 4 OF 189	

G-04

PLOTTED: 19/10/2026
PLOT STYLE: ----
FILE PATH: P:\Projects\0106 - City Of Houston\20031 - White Oak WWTP Phase II\4.0 CAD\4.2 Electrical\E-04 OVERALL DEMOLITION ELECTRICAL SITE PLAN.dwg

HARRIS COUNTY FLOODPLAIN REFERENCE MARKS

Floodplain RM No.:	050085	**Reference Mark Status**	Recovered
Stream Number:	E100-00-00	**Date:**	6/4/2013
		Condition:	Recovered
County: Harris	**State:** Texas	**Established By:**	Landtech Consultants, Inc.
Key Map No.:	411N	**Date Established:**	5/1/2003
NGS Classification(1):	Range VI	**Watershed:**	White Oak Bayou
RM's Directly Tied:	050080,050330,050350	**Survey Method Horz:**	GPSOBS
Units of Measure:	US Survey Foot	**Survey Method Vert:**	GPSOBS
Horizontal Datum:	NAD83	**Vertical Datum:**	NAVD88
Horizontal Adj.(2):	2001 Adjustment	**Vertical Adj.(3):**	2001 Adjustment
Projection Zone:	Texas South Central 4204	**Geoid Model Used:**	GEOID99 (CONUS)
Station Name:	050085	**Contractor PID:**	43
Marker:	BRASS DISC	**Rod Depth:**	NA
Stamping:	E100 BM16	**Sleeve Depth:**	NA
Mark Logo:	HCFCD	**Geoid Height:**	-89.65
Latitude:	29° 52' 35.99199" N	**Northing:**	13882955.34
Longitude:	95° 29' 39.55419" W	**Easting:**	3079342.64
Ellipsoid Height:	-3.10	**Elevation(4):**	86.80
Convergence:	1° 43' 03"	**Scale Factor:**	0.9999078
Satellite Observable:	YES	**Elevation Factor:**	1.00000014
NGS PID (if applic):	NA	**Combined Factor:**	0.99990795

Notes:

1. This is NGS' new classification system. Range VI indicates that this position meets the 0.02m-0.05m Accuracy Standard for Horizontal Position, Ellipsoidal Height, and Orthometric Height (elevation) at the 95% confidence level (m=meters).
2. Horizontal Adjustment - This survey is constrained to the NGS Published Horizontal positions of the geodetic stations adjusted by NGS in 2001.
3. Vertical Adjustment - This survey is constrained to the NGS Published Elevation for Northeast 2250 CORS ARP adjusted by NGS in 2001 and as published in PID AJ6430. Epoch Date 1997.00.
4. The elevation shown equals the Ellipsoid Height minus Geoid Height (from GEOID99) plus a constant of 0.253 feet.
5. The elevation is established by differential leveling techniques, utilizing the published elevations from nearby Reference Marks.

Station Recovery Data: Report an Issue with a Reference Mark - submit to Harris County Flood Control

HARRIS COUNTY FLOODPLAIN REFERENCE MARKS

Floodplain RM Number: 050085
Stream Number: E100-00-00
Northing: 13882955.34 **Easting:** 3079342.64 **Elevation:** 86.80

Location:

N Houston Rosslyn Road @ White Oak Bayou

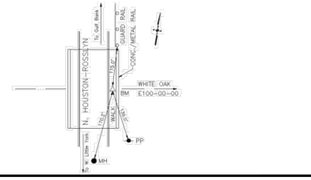

To Reach Description

From the intersection of W. Little York and Bingle, north along Rosslyn 0.9 miles to the benchmark on the right.

Photo 1-Station Detail:



Photo 2-Station Area Picture:



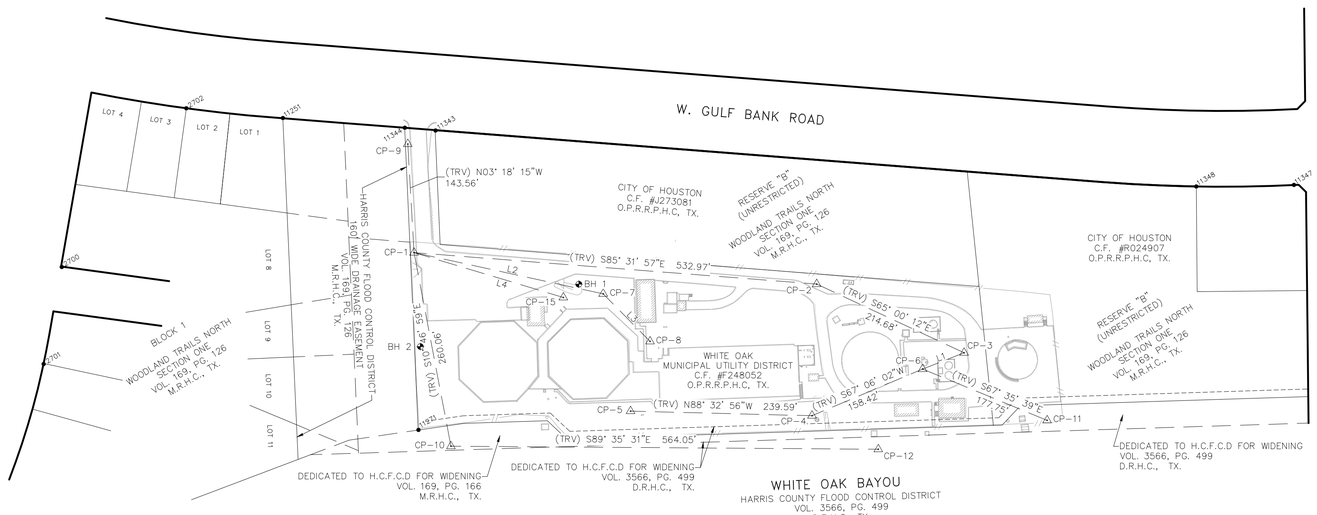

SITE MON.
C.O.H. MON. # 5062-8407
BRASS DISC IN CONC.
X=3,079,342.61
Y=13,882,955.53
ELEV=86.38'

100 0 50 100 200
SCALE: 1" = 100'

LEGEND:

- PROPERTY LINE
- 10' U.E. EASEMENT
- RIGHT-OF-WAY PROPERTY LINE
- (TRV.) N 00° 00' 00" E. TRAVERSE LINE
- (BL.) N 00° 00' 00" E. BASELINE
- 8969 RIGHT OF WAY MONUMENTS

GENERAL NOTES:
CP= indicates Traverse Point
BP# indicates Baseline Point
(TRV.) indicates Traverse Line
(BL) indicates Baseline Line
CM indicates Control Monument
Fnd. indicates Found
RT indicates Right
LT indicates Left
XC indicates 'X' Cut
I.P. indicates Iron Pipe
I.R. indicates Iron Rod
I.R.C. indicates Iron Rod w/Cap
P.I.P. indicates Pinch Iron Pipe
MAG indicates MAG Nail
U.T.S. indicates unable to set
PC indicates Point of Curve
PCC indicates Point of Compound Curvature
PT indicates Point of Tangent
TBM indicates Temporary Benchmark
#XXXX indicates Address
W.L.E. indicates Water Line Easement
U.E. indicates Utility Easement
S.S.E. indicates Sanitary Sewer Easement
S.E. indicates Storm Sewer Easement
B.L. indicates Building Line
M.R.H.C., TX. indicates Map Records Harris County, Texas
D.R.H.C., TX. indicates Deed Records Harris County, Texas
H.C.C.F. indicates Harris County Clerk's File
O.P.R.R.P.H.C., TX. indicates Official Public Records Real Property Harris County, Texas

NOTES:

1. ALL BEARINGS AND COORDINATES SHOWN HEREON ARE TIED TO THE NSRS AND EXPRESSED IN THE TEXAS COORDINATE SYSTEM, SOUTH CENTRAL ZONE 4204, NAD 83' (2011), ITRF (EPOCH 2010.0000), NAVD '88 (GEOID 99).
2. ALL DISTANCES SHOWN HEREON ARE SURFACE VALUES. ALL COORDINATES SHOWN HEREON ARE GRID VALUES UNLESS OTHERWISE NOTED. TO CONVERT SURFACE VALUES TO GRID VALUES MULTIPLY BY THE SCALE FACTOR OF 0.999870017.
3. THE RIGHT OF WAY SHOWN HEREON IS BASED ON THE BEST AVAILABLE EVIDENCE FOUND IN THE FIELD AT THE TIME OF THE SURVEY COUPLED WITH THE DOCUMENTS OF RECORD IN THE COUNTY CLERK'S OFFICE PROVIDED BY COURTHOUSE SPECIALISTS.
4. TO CONVERT ELEVATIONS FROM NAVD 88' (GD 99) DATUM TO NAVD 88' (GD 18) SUBTRACT 0.42 FEET. HELD TSARP 050085 FOR CONVERSION FACTOR.
5. THE TRACTS OF LAND SHOWN ON THIS ALIGNMENT MAP LIE WITHIN ZONE AE (SHADED) AS SHOWN ON THE FEDERAL EMERGENCY MANAGEMENT AGENCY FLOOD INSURANCE MAP, ACCORDING TO PANEL #465 OF 1150, FIRM MAP NUMBER 48201C0465M FOR HARRIS COUNTY, TEXAS, AND INCORPORATED AREAS. REVISED JUNE 9, 2014.

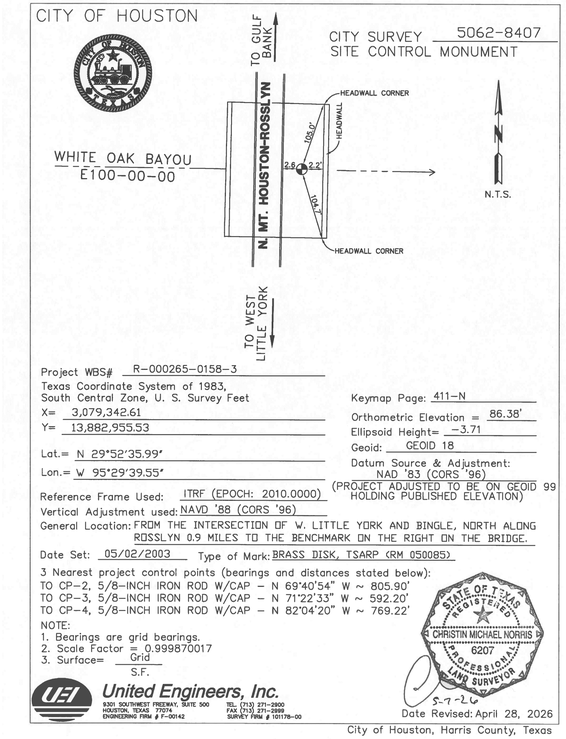

Project WBS# R-000265-0158-3
Texas Coordinate System of 1983, South Central Zone, U. S. Survey Feet
X= 3,079,342.61
Y= 13,882,955.53
Lat.= N 29°52'35.99"
Lon.= W 95°29'39.55"
Reference Frame Used: ITRF (EPOCH: 2010.0000)
Vertical Adjustment used: NAVD '88 (CORS '96)
General Location: FROM THE INTERSECTION OF W. LITTLE YORK AND BINGLE, NORTH ALONG ROSSLYN 0.9 MILES TO THE BENCHMARK ON THE RIGHT ON THE BRIDGE.
Date Set: 05/02/2003 Type of Mark: BRASS DISK, TSARP (RM 050085)
Keymap Page: 411-N
Orthometric Elevation = 86.38'
Ellipsoid Height= -3.71
Geoid: GEOID 18
Datum Source & Adjustment: NAD '83 (CORS '96) (PROJECT ADJUSTED TO BE ON GEOID 99 HOLDING PUBLISHED ELEVATION)

3 Nearest project control points (bearings and distances stated below):
TO CP-2, 5/8-INCH IRON ROD W/CAP – N 69°40'54" W ~ 805.90'
TO CP-3, 5/8-INCH IRON ROD W/CAP – N 71°22'33" W ~ 592.20'
TO CP-4, 5/8-INCH IRON ROD W/CAP – N 82°04'20" W ~ 769.22'

NOTE:
1. Bearings are grid bearings.
2. Scale Factor = 0.999870017
3. Surface= Grid / S.F.

STATE OF TEXAS REGISTERED CHRISTIN MICHAEL NORRIS 6207 PROFESSIONAL LAND SURVEYOR
5-7-26

United Engineers, Inc.
9301 SOUTHWEST FREEWAY, SUITE 500 HOUSTON, TEXAS 77074
ENGINEERING FIRM # F-00142 TEL: (713) 271-2900 FAX (713) 271-2989 SURVEY FIRM # 101178-00

Date Revised: April 28, 2026
City of Houston, Harris County, Texas

TSARP CONVERSION REFERENCE MONUMENT

(TSARP) HARRIS COUNTY FLOODPLAIN REFERENCE MARK NUMBER 050085
FLOOD PLAIN REFERENCE MARK, BRASS DISC, STAMPED E 100 BM16, FROM THE INTERSECTION OF W. LITTLE YORK AND BINGLE, TRAVEL NORTH ALONG NORTH HOUSTON ROSSLYN ROAD 0.9 MILES TO THE BENCHMARK ON EAST SIDEWALK OF BRIDGE OVER WHITE OAK BAYOU.
PUBLISHED ELEV= 86.80' (NAVD 1988, 2001 ADJUSTMENT, GEOID 99)
OBSERVED ELEV= 86.38' (NAVD 1988, GEOID 18)

TBM LIST:

TBM 'A', CP-1, 5/8-INCH IRON ROD WITH CAP. (SEE RECOVERY SKETCH) ELEV=83.34'
TBM 'B', CP-2, 5/8-INCH IRON ROD WITH CAP. (SEE RECOVERY SKETCH) ELEV=82.46'
TBM 'C', CP-3, 5/8-INCH IRON ROD WITH CAP. (SEE RECOVERY SKETCH) ELEV=82.38'
TBM 'D', CP-4, 5/8-INCH IRON ROD WITH CAP. (SEE RECOVERY SKETCH) ELEV=83.03'
TBM 'E', CP-5, 5/8-INCH IRON ROD WITH CAP. (SEE RECOVERY SKETCH) ELEV=83.29'
TBM 'F', CP-6, 5/8-INCH IRON ROD WITH CAP. (SEE RECOVERY SKETCH) ELEV=82.91'
TBM 'G', CP-7, 5/8-INCH IRON ROD WITH CAP. (SEE RECOVERY SKETCH) ELEV=83.30'
TBM 'H', CP-8, 5/8-INCH IRON ROD WITH CAP. (SEE RECOVERY SKETCH) ELEV=83.66'
TBM 'I', CP-9, 5/8-INCH IRON ROD WITH CAP. (SEE RECOVERY SKETCH) ELEV=82.72'
TBM 'J', CP-10, 5/8-INCH IRON ROD WITH CAP. (SEE RECOVERY SKETCH) ELEV=83.37'
TBM 'K', CP-11, 5/8-INCH IRON ROD WITH CAP. (SEE RECOVERY SKETCH) ELEV=80.83'
TBM 'L', CP-12, 5/8-INCH IRON ROD WITH CAP. (SEE RECOVERY SKETCH) ELEV=82.21'
TBM 'M', CP-15, 5/8-INCH IRON ROD WITH CAP. (SEE RECOVERY SKETCH) ELEV=83.25'

BOREHOLE TABLE				
POINT #	GRID NORTHING	GRID EASTING	ELEVATION	DESCRIPTION
2001	13883235.08	3078273.01	82.94'	BH 1
2002	13883152.88	3078064.00	83.81'	BH 2

LINE TABLE		
LINE #	BEARING	LENGTH
L1	S 68°39'46" W	58.78'
L2	S 77°42'17" E	255.46'
L3	S 44°34'58" E	88.15'
L4	S 73°16'21" E	205.75'

R.O.W. MONUMENT TABLE			
POINT #	GRID NORTHING	GRID EASTING	DESCRIPTION
2700	13,883,257.88	3,077,590.74	5/8" iron rod
2701	13,883,129.90	3,077,566.89	1/2" iron rod
2702	13,883,467.30	3,077,755.12	1/2" iron rod
11251	13,883,454.45	3,077,882.58	1/2" iron rod w/cap
11271	13,883,042.92	3,078,061.45	5/8" iron rod
11343	13,883,437.96	3,078,084.09	5/8" iron rod bent
11344	13,883,441.60	3,078,043.48	5/8" iron rod
11347	13,883,366.21	3,079,216.72	5/8" iron rod bent
11348	13,883,364.12	3,079,087.85	5/8" iron rod

HORIZONTAL AND VERTICAL CONTROL TABLE				
POINT #	GRID NORTHING	GRID EASTING	ELEVATION	DESCRIPTION
CP-1	13,883,276.84	3,078,055.67	83.34'	SET 5/8" I.R.C.
CP-2	13,883,235.33	3,078,586.95	82.46'	SET 5/8" I.R.C.
CP-3	13,883,144.63	3,078,781.49	82.38'	SET 5/8" I.R.C.
CP-4	13,883,061.61	3,078,580.83	83.03'	SET 5/8" I.R.C.
CP-5	13,883,067.68	3,078,341.35	83.29'	SET 5/8" I.R.C.
CP-6	13,883,123.25	3,078,726.75	82.91'	SET 5/8" I.R.C.
CP-7	13,883,222.45	3,078,305.23	83.30'	SET 5/8" I.R.C.
CP-8	13,883,159.67	3,078,367.10	83.66'	SET 5/8" I.R.C.
CP-9	13,883,420.14	3,078,047.39	82.72'	SET 5/8" I.R.C.
CP-10	13,883,021.40	3,078,104.32	83.37'	SET 5/8" I.R.C.
CP-11	13,883,055.50	3,078,891.06	80.83'	SET 5/8" I.R.C.
CP-12	13,883,017.39	3,078,668.28	82.21'	SET 5/8" I.R.C.
CP-15	13,883,217.63	3,078,252.69	83.25'	SET 5/8" I.R.C.

CERTIFICATION:

I HEREBY CERTIFY THAT: (1) THIS PLAT WAS PREPARED FROM AN ON THE GROUND SURVEY MADE UNDER MY SUPERVISION; (2) THAT THIS PLAT CORRECTLY REPRESENTS THE FACTS FOUND AT THE TIME OF SURVEY; (3) THAT THIS PLAT AND THE SURVEY IT REPRESENTS, CONFORMS TO THE REQUIREMENTS OF THE LAND SURVEYING PRACTICES ACT IN EFFECT AT THE TIME OF THE SURVEY FOR THE TYPE OF PROFESSIONAL SERVICE SO STATED.

TYPE OF PROFESSIONAL SERVICE: TOPOGRAPHIC AND R.O.W. SURVEY

CHRISTIN M. NORRIS, R.P.L.S. 6207 DATE

INTERIM REVIEW ONLY
Document incomplete: Not intended for permit or construction.
Surveyor: Christin M. Norris
TX R.P.L.S. No. 6207
Date: 06/05/2026

NO.	DATE	REVISION	APP.

MBROH 20 ENGINEERING
11757 KATY FWY,
SUITE 625
HOUSTON, TX 77077
713-468-2545

SURVEYED BY:
FB NO.

THESE DOCUMENTS ARE FOR INTERIM REVIEW AND ARE NOT INTENDED FOR CONSTRUCTION, BIDDING, OR PERMIT PURPOSES.
HANS POURES
TEXAS P.E. NO. 131630
DATE: 10/14/2026

CITY OF HOUSTON
HOUSTON PUBLIC WORKS

WHITE OAKS WWTP IMPROVEMENTS

SURVEY

SURVEY CONTROL MAP
SHEET 1 OF 1

WBS NUMBER	FOR CITY OF HOUSTON USE ONLY
R-000265-0158-3	
DRAWING SCALE	
1" = 100'	
CITY OF HOUSTON PM	
SHAHIDUR RAHMAN, PE	
SHEET NO. 5 OF 189	G-03

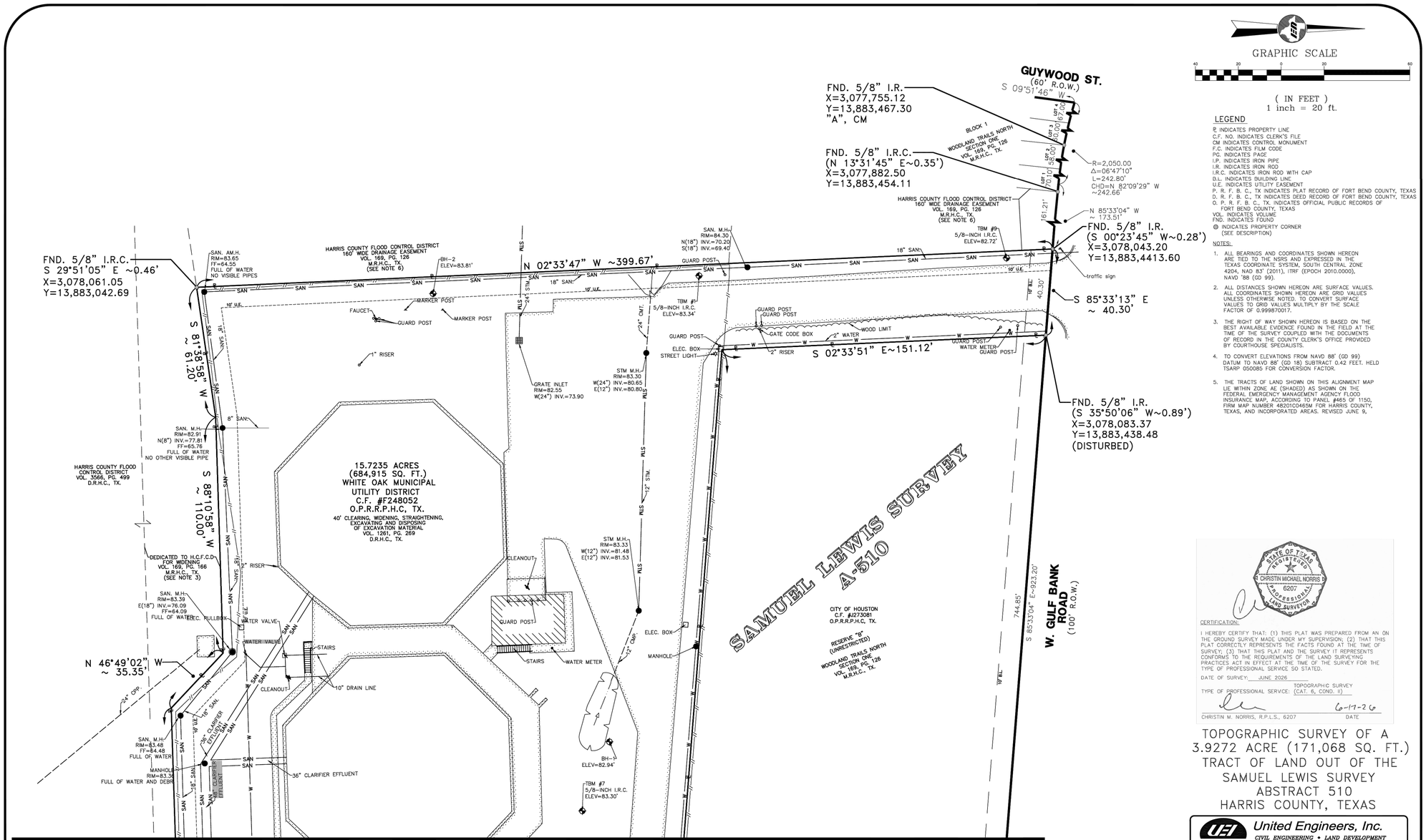

GRAPHIC SCALE

40 20 0 20 40

(IN FEET)
1 inch = 20 ft.

LEGEND

℄ INDICATES PROPERTY LINE
C.F. NO. INDICATES CLERK'S FILE
CM INDICATES CONTROL MONUMENT
F.C. INDICATES FILM CODE
PG. INDICATES PAGE
I.P. INDICATES IRON PIPE
I.R. INDICATES IRON ROD
I.R.C. INDICATES IRON ROD WITH CAP
B.L. INDICATES BUILDING LINE
U.E. INDICATES UTILITY EASEMENT
P. R. F. B. C., TX INDICATES PLAT RECORD OF FORT BEND COUNTY, TEXAS
D. R. F. B. C., TX INDICATES DEED RECORD OF FORT BEND COUNTY, TEXAS
O. P. R. F. B. C., TX. INDICATES OFFICIAL PUBLIC RECORDS OF FORT BEND COUNTY, TEXAS
VOL. INDICATES VOLUME
FND. INDICATES FOUND
◎ INDICATES PROPERTY CORNER (SEE DESCRIPTION)

NOTES:

1. ALL BEARINGS AND COORDINATES SHOWN HEREON ARE TIED TO THE NSRS AND EXPRESSED IN THE TEXAS COORDINATE SYSTEM, SOUTH CENTRAL ZONE 4204, NAD 83' (2011), ITRF (EPOCH 2010.0000), NAVD '88 (GD 99).
2. ALL DISTANCES SHOWN HEREON ARE SURFACE VALUES. ALL COORDINATES SHOWN HEREON ARE GRID VALUES UNLESS OTHERWISE NOTED. TO CONVERT SURFACE VALUES TO GRID VALUES MULTIPLY BY THE SCALE FACTOR OF 0.999870017.
3. THE RIGHT OF WAY SHOWN HEREON IS BASED ON THE BEST AVAILABLE EVIDENCE FOUND IN THE FIELD AT THE TIME OF THE SURVEY COUPLED WITH THE DOCUMENTS OF RECORD IN THE COUNTY CLERK'S OFFICE PROVIDED BY COURTHOUSE SPECIALISTS.
4. TO CONVERT ELEVATIONS FROM NAVD 88' (GD 99) DATUM TO NAVD 88' (GD 18) SUBTRACT 0.42 FEET. HELD TSARP 050085 FOR CONVERSION FACTOR.
5. THE TRACTS OF LAND SHOWN ON THIS ALIGNMENT MAP LIE WITHIN ZONE AE (SHADED) AS SHOWN ON THE FEDERAL EMERGENCY MANAGEMENT AGENCY FLOOD INSURANCE MAP, ACCORDING TO PANEL #465 OF 1150, FIRM MAP NUMBER 48201C0465M FOR HARRIS COUNTY, TEXAS, AND INCORPORATED AREAS. REVISED JUNE 9,

STATE OF TEXAS REGISTERED CHRISTIN MICHAEL NORRIS 6207 PROFESSIONAL LAND SURVEYOR

CERTIFICATION:

I HEREBY CERTIFY THAT: (1) THIS PLAT WAS PREPARED FROM AN ON THE GROUND SURVEY MADE UNDER MY SUPERVISION; (2) THAT THIS PLAT CORRECTLY REPRESENTS THE FACTS FOUND AT THE TIME OF SURVEY; (3) THAT THIS PLAT AND THE SURVEY IT REPRESENTS CONFORMS TO THE REQUIREMENTS OF THE LAND SURVEYING PRACTICES ACT IN EFFECT AT THE TIME OF THE SURVEY FOR THE TYPE OF PROFESSIONAL SERVICE SO STATED.

DATE OF SURVEY: JUNE 2026

TYPE OF PROFESSIONAL SERVICE: TOPOGRAPHIC SURVEY (CAT. 6, COND. II)

CHRISTIN M. NORRIS, R.P.L.S., 6207 — DATE 6-17-26

TOPOGRAPHIC SURVEY OF A
3.9272 ACRE (171,068 SQ. FT.)
TRACT OF LAND OUT OF THE
SAMUEL LEWIS SURVEY
ABSTRACT 510
HARRIS COUNTY, TEXAS

United Engineers, Inc.
CIVIL ENGINEERING • LAND DEVELOPMENT
CONSTRUCTION MANAGEMENT
SURVEYING • UTILITY ENGINEERING
ENGINEERING FIRM # F-000142 SURVEY FIRM # 101178-00
10375 RICHMOND AVENUE, SUITE 1325 TEL. (713) 271-2900
HOUSTON, TEXAS 77042 FAX (713) 271-2999

DATE: MAY, 2026
DRAWING NAME: "W.O.W.W.T.P. TOPOGRAPHIC SURVEY"
JOB No. 226-049
SHT. 1 OF 3
SCALE: 1"=20'

NO.	DATE	REVISION	APP.

MBROH 20 ENGINEERING
11757 KATY FWY,
SUITE 625
HOUSTON, TX 77077
713-468-2545

SURVEYED BY:
FB NO.

CITY OF HOUSTON
HOUSTON PUBLIC WORKS

WHITE OAKS WWTP IMPROVEMENTS

SURVEY
W.O.W.W.T.P. TOPOGRAPHIC
SURVEY 1 OF 3

WBS NUMBER	FOR CITY OF HOUSTON USE ONLY
R-000265-0158-3	
DRAWING SCALE	
N.T.S.	
CITY OF HOUSTON PM	
SHAHIDUR RAHMAN, PE	

G-05 SHEET NO. 6 OF 189

PLOTTED: 05/11/2026
PLOT STYLE: ----
FILE PATH: P:\Projects\0106 - City Of Houston\20031 - White Oak WWTP Phase II\4.0 CAD\4.2 Electrical\G-05 W.O.W.W.T.P. TOPOGRAPHIC SURVEY 1 OF 3.dwg

PLOTTED: 05/11/2026
PLOT STYLE: ----
FILE PATH: P:\Projects\0106 - City Of Houston\20031 - White Oak WWTP Phase II\4.0 CAD\4.2 Electrical\G-06 W.O.W.W.T.P. TOPOGRAPHIC SURVEY 2 OF 3.dwg

NO.	DATE	REVISION	APP.

MATCH LINE SHEET "A"

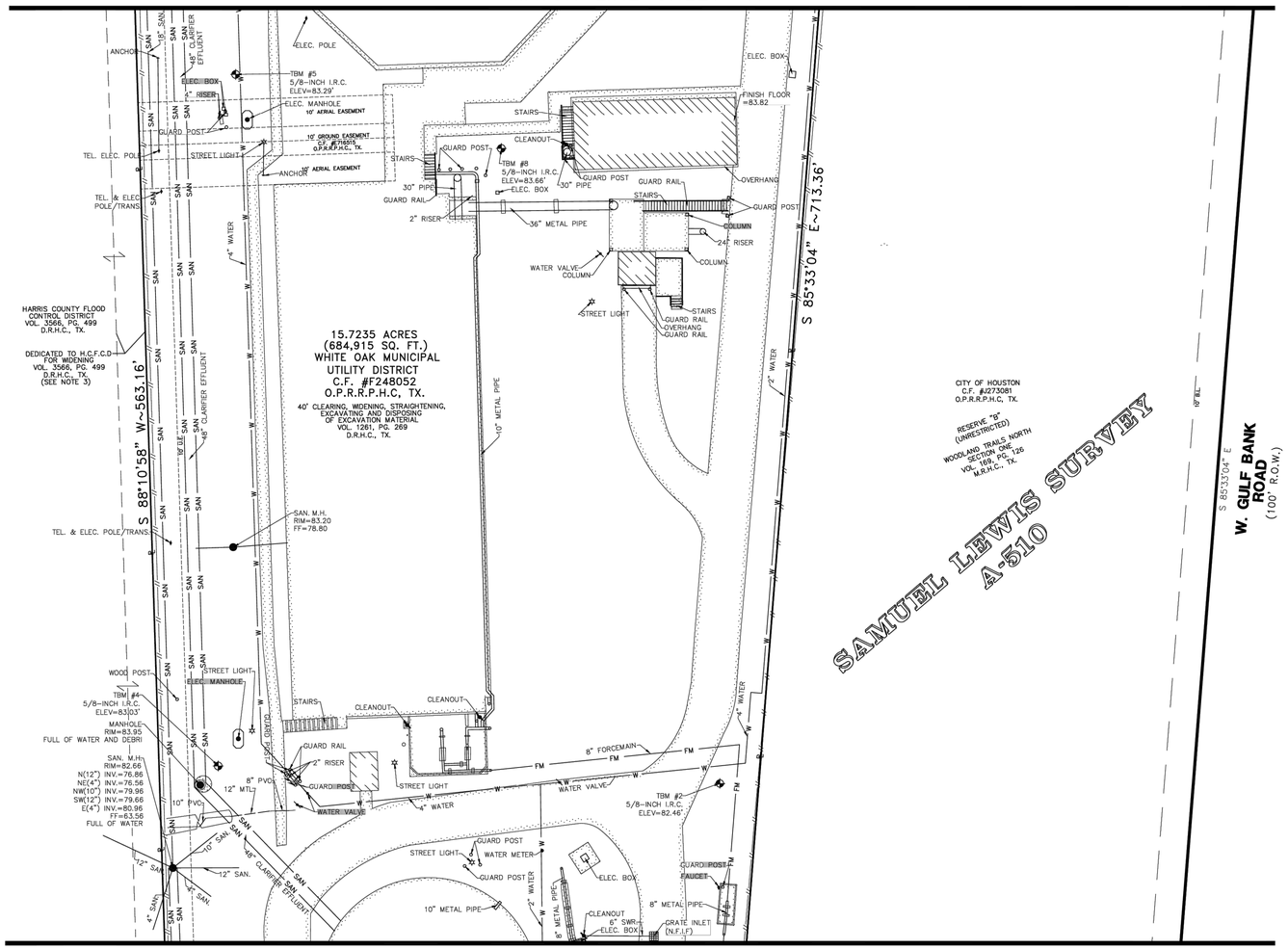

MATCH LINE SHEET "C"

GRAPHIC SCALE

40 20 0 20 40

(IN FEET)
1 inch = 20 ft.

LEGEND

℄ INDICATES PROPERTY LINE
C.F. NO. INDICATES CLERK'S FILE
CM INDICATES CONTROL MONUMENT
F.C. INDICATES FILM CODE
PG. INDICATES PAGE
I.P. INDICATES IRON PIPE
I.R. INDICATES IRON ROD
I.R.C. INDICATES IRON ROD WITH CAP
B.L. INDICATES BUILDING LINE
U.E. INDICATES UTILITY EASEMENT
P. R. F. B. C., TX INDICATES PLAT RECORD OF FORT BEND COUNTY, TEXAS
D. R. F. B. C., TX INDICATES DEED RECORD OF FORT BEND COUNTY, TEXAS
O. P. R. F. B. C., TX INDICATES OFFICIAL PUBLIC RECORDS OF FORT BEND COUNTY, TEXAS
VOL. INDICATES VOLUME
FND. INDICATES FOUND
◎ INDICATES PROPERTY CORNER (SEE DESCRIPTION)

NOTES:

1. ALL BEARINGS AND COORDINATES SHOWN HEREON ARE TIED TO THE NSRS AND EXPRESSED IN THE TEXAS COORDINATE SYSTEM, SOUTH CENTRAL ZONE 4204, NAD 83' (2011), ITRF (EPOCH 2010.0000), NAVD '88 (GD 99).
2. ALL DISTANCES SHOWN HEREON ARE SURFACE VALUES. ALL COORDINATES SHOWN HEREON ARE GRID VALUES UNLESS OTHERWISE NOTED. TO CONVERT SURFACE VALUES TO GRID VALUES MULTIPLY BY THE SCALE FACTOR OF 0.999870017.
3. THE RIGHT OF WAY SHOWN HEREON IS BASED ON THE BEST AVAILABLE EVIDENCE FOUND IN THE FIELD AT THE TIME OF THE SURVEY COUPLED WITH THE DOCUMENTS OF RECORD IN THE COUNTY CLERK'S OFFICE PROVIDED BY COURTHOUSE SPECIALISTS.
4. TO CONVERT ELEVATIONS FROM NAVD 88' (GD 99) DATUM TO NAVD 88' (GD 18) SUBTRACT 0.42 FEET. HELD TSARP 050085 FOR CONVERSION FACTOR.
5. THE TRACTS OF LAND SHOWN ON THIS ALIGNMENT MAP LIE WITHIN ZONE AE (SHADED) AS SHOWN ON THE FEDERAL EMERGENCY MANAGEMENT AGENCY FLOOD INSURANCE MAP, ACCORDING TO PANEL #465 OF 1150, FIRM MAP NUMBER 48201C0465M FOR HARRIS COUNTY, TEXAS, AND INCORPORATED AREAS. REVISED JUNE 9,

STATE OF TEXAS REGISTERED CHRISTIN MICHAEL NORRIS 6207 PROFESSIONAL LAND SURVEYOR

CERTIFICATION:

I HEREBY CERTIFY THAT: (1) THIS PLAT WAS PREPARED FROM AN ON THE GROUND SURVEY MADE UNDER MY SUPERVISION; (2) THAT THIS PLAT CORRECTLY REPRESENTS THE FACTS FOUND AT THE TIME OF SURVEY; (3) THAT THIS PLAT AND THE SURVEY IT REPRESENTS CONFORMS TO THE REQUIREMENTS OF THE LAND SURVEYING PRACTICES ACT IN EFFECT AT THE TIME OF THE SURVEY FOR THE TYPE OF PROFESSIONAL SERVICE SO STATED.

DATE OF SURVEY: JUNE 2026

TYPE OF PROFESSIONAL SERVICE: TOPOGRAPHIC SURVEY (CAT. 6, COND. II)

CHRISTIN M. NORRIS, R.P.L.S., 6207 — DATE 6-17-26

TOPOGRAPHIC SURVEY OF A
3.9272 ACRE (171,068 SQ. FT.)
TRACT OF LAND OUT OF THE
SAMUEL LEWIS SURVEY
ABSTRACT 510
HARRIS COUNTY, TEXAS

United Engineers, Inc.
CIVIL ENGINEERING • LAND DEVELOPMENT
CONSTRUCTION MANAGEMENT
SURVEYING • UTILITY ENGINEERING
ENGINEERING FIRM # F-000143 SURVEY FIRM # 10178-00
10375 RICHMOND AVENUE, SUITE 1325 TEL. (713) 271-2900
HOUSTON, TEXAS 77042 FAX (713) 271-2999

DATE: MAY, 2026
DRAWING NAME: "W.O.W.W.T.P. TOPOGRAPHIC SURVEY"
JOB No. 226-049
SHT. 2 OF 3
SCALE: 1"=20'

MBROH 20 ENGINEERING
11757 KATY FWY,
SUITE 625
HOUSTON, TX 77077
713-468-2545

SURVEYED BY:
FB NO.

CITY OF HOUSTON
HOUSTON PUBLIC WORKS

WHITE OAKS WWTP IMPROVEMENTS

SURVEY
W.O.W.W.T.P. TOPOGRAPHIC
SURVEY 2 OF 3

WBS NUMBER	FOR CITY OF HOUSTON USE ONLY
R-000265-0158-3	
DRAWING SCALE	
N.T.S.	
CITY OF HOUSTON PM	
SHAHIDUR RAHMAN, PE	

G-06 SHEET NO. 7 OF 189

FILE PATH: P:\Projects\0106 - City Of Houston\20031 - White Oak WWTP Phase II\4.0 CAD\4.2 Electrical\G-07 W.O.W.W.T.P. TOPOGRAPHIC SURVEY 3 OF 3.dwg
PLOT STYLE: ----
PLOTTED: 05/11/2026

NO.	DATE	REVISION	APP.

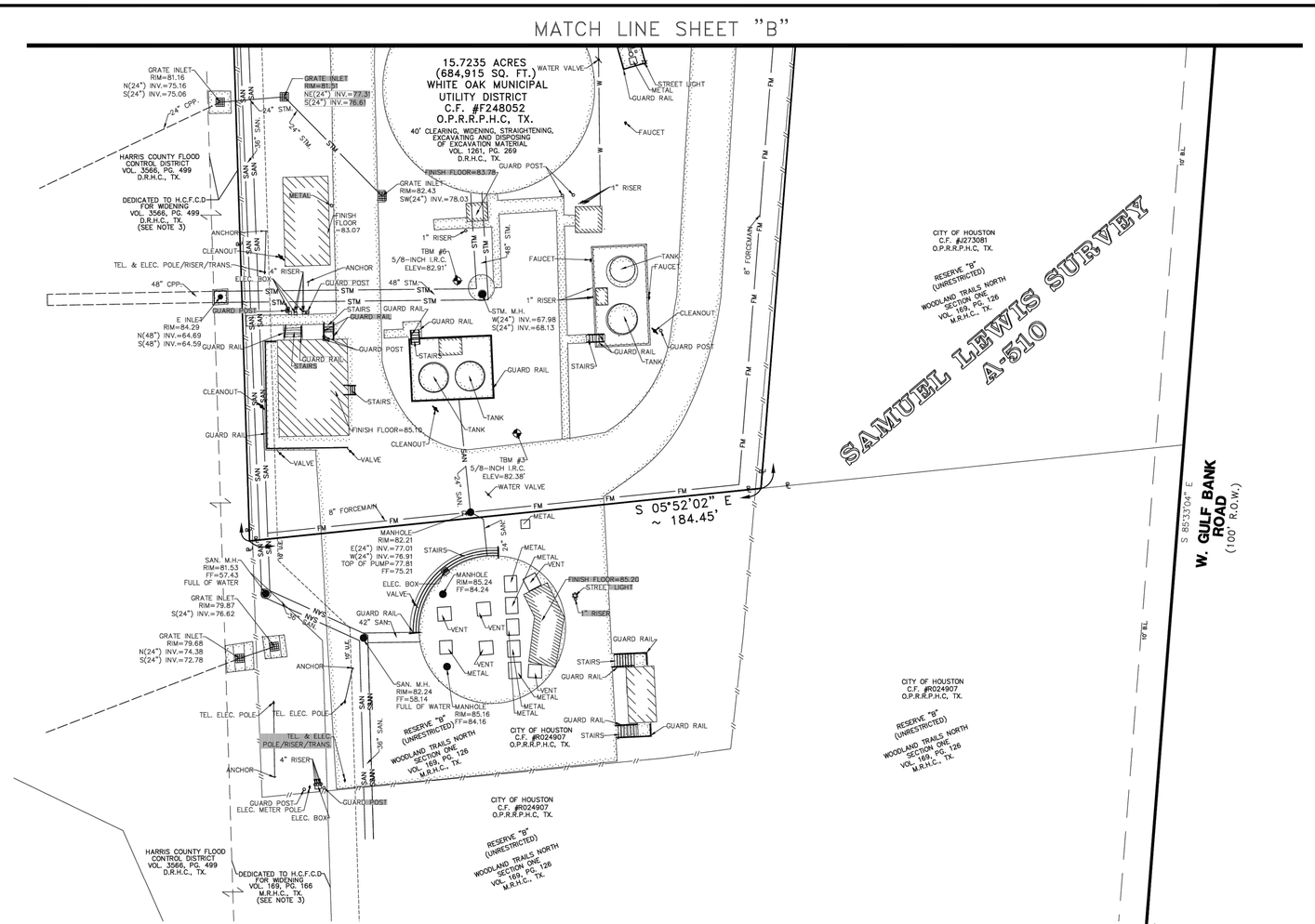

GRAPHIC SCALE

40 20 0 20 40

(IN FEET)
1 inch = 20 ft.

LEGEND

℄ INDICATES PROPERTY LINE
C.F. NO. INDICATES CLERK'S FILE
CM INDICATES CONTROL MONUMENT
F.C. INDICATES FILM CODE
PG. INDICATES PAGE
I.P. INDICATES IRON PIPE
I.R. INDICATES IRON ROD
I.R.C. INDICATES IRON ROD WITH CAP
D.L. INDICATES BUILDING LINE
U.E. INDICATES UTILITY EASEMENT
P. R. F. B. C., TX INDICATES PLAT RECORD OF FORT BEND COUNTY, TEXAS
D. R. F. B. C., TX INDICATES DEED RECORD OF FORT BEND COUNTY, TEXAS
O. P. R. F. B. C., TX. INDICATES OFFICIAL PUBLIC RECORDS OF FORT BEND COUNTY, TEXAS
VOL. INDICATES VOLUME
FND. INDICATES FOUND
◎ INDICATES PROPERTY CORNER (SEE DESCRIPTION)

NOTES:

1. ALL BEARINGS AND COORDINATES SHOWN HEREON ARE TIED TO THE NSRS AND EXPRESSED IN THE TEXAS COORDINATE SYSTEM, SOUTH CENTRAL ZONE 4204, NAD 83' (2011), ITRF (EPOCH 2010.0000), NAVD '88 (GD 99).
2. ALL DISTANCES SHOWN HEREON ARE SURFACE VALUES. ALL COORDINATES SHOWN HEREON ARE GRID VALUES UNLESS OTHERWISE NOTED. TO CONVERT SURFACE VALUES TO GRID VALUES MULTIPLY BY THE SCALE FACTOR OF 0.999870017.
3. THE RIGHT OF WAY SHOWN HEREON IS BASED ON THE BEST AVAILABLE EVIDENCE FOUND IN THE FIELD AT THE TIME OF THE SURVEY COUPLED WITH THE DOCUMENTS OF RECORD IN THE COUNTY CLERK'S OFFICE PROVIDED BY COURTHOUSE SPECIALISTS.
4. TO CONVERT ELEVATIONS FROM NAVD 88' (GD 99) DATUM TO NAVD 88' (GD 18) SUBTRACT 0.42 FEET. HELD TSARP 050085 FOR CONVERSION FACTOR.
5. THE TRACTS OF LAND SHOWN ON THIS ALIGNMENT MAP LIE WITHIN ZONE AE (SHADED) AS SHOWN ON THE FEDERAL EMERGENCY MANAGEMENT AGENCY FLOOD INSURANCE MAP, ACCORDING TO PANEL #465 OF 1150, FIRM MAP NUMBER 48201C0465M FOR HARRIS COUNTY, TEXAS, AND INCORPORATED AREAS. REVISED JUNE 9,

STATE OF TEXAS REGISTERED CHRISTIN MICHAEL NORRIS 6207 PROFESSIONAL LAND SURVEYOR

CERTIFICATION:

I HEREBY CERTIFY THAT: (1) THIS PLAT WAS PREPARED FROM AN ON THE GROUND SURVEY MADE UNDER MY SUPERVISION; (2) THAT THIS PLAT CORRECTLY REPRESENTS THE FACTS FOUND AT THE TIME OF SURVEY; (3) THAT THIS PLAT AND THE SURVEY IT REPRESENTS CONFORMS TO THE REQUIREMENTS OF THE LAND SURVEYING PRACTICES ACT IN EFFECT AT THE TIME OF THE SURVEY FOR THE TYPE OF PROFESSIONAL SERVICE SO STATED.

DATE OF SURVEY: JUNE 2026
TYPE OF PROFESSIONAL SERVICE: TOPOGRAPHIC SURVEY (CAT. 6, COND. II)

6-17-26
CHRISTIN M. NORRIS, R.P.L.S., 6207 DATE

TOPOGRAPHIC SURVEY OF A 3.9272 ACRE (171,068 SQ. FT.) TRACT OF LAND OUT OF THE SAMUEL LEWIS SURVEY ABSTRACT 510 HARRIS COUNTY, TEXAS

United Engineers, Inc.
CIVIL ENGINEERING • LAND DEVELOPMENT
CONSTRUCTION MANAGEMENT
SURVEYING • UTILITY ENGINEERING
ENGINEERING FIRM # F-000142 SURVEY FIRM # 10178-00
10375 RICHMOND AVENUE, SUITE 1325 TEL (713) 271-2900
HOUSTON, TEXAS 77042 FAX (713) 271-2999

DATE: MAY, 2026
DRAWING NAME: "W.O.W.W.T.P. TOPOGRAPHIC SURVEY"
JOB No. 226-049
SHT. 3 OF 3
SCALE: 1"=20'

MBROH 20 ENGINEERING
11757 KATY FWY,
SUITE 625
HOUSTON, TX 77077
713-468-2545

SURVEYED BY:
FB NO.

CITY OF HOUSTON
HOUSTON PUBLIC WORKS

WHITE OAKS WWTP IMPROVEMENTS

SURVEY
W.O.W.W.T.P. TOPOGRAPHIC
SURVEY 3 OF 3

WBS NUMBER	FOR CITY OF HOUSTON USE ONLY
R-000265-0158-3	
DRAWING SCALE	
N.T.S.	
CITY OF HOUSTON PM	
SHAHIDUR RAHMAN, PE	

PLOTTED: 28/10/2026
PLOT STYLE: Coh_ctb_230809.ctb
FILE PATH: \\ushou8-fil003\houprojects\BIA\BIA01\Mbroh Engineering\D39B4701_White Oak WWTP\700CADD\702civil\702.1 PRODUCTION DRAWINGS\1-GENERAL NOTES.dwg

GENERAL NOTES – INSIDE CITY LIMITS:

1. UNLESS OTHERWISE NOTED AND APPROVED ON DRAWINGS, CONSTRUCT CIVIL INFRASTRUCTURE IN ACCORDANCE WITH THE EFFECTIVE EDITION OF THE HOUSTON PUBLIC WORKS STANDARD CONSTRUCTION SPECIFICATIONS, STANDARD CONSTRUCTION DETAILS, AND SUPPLEMENTS, ADDENDA AND AMENDMENTS THERETO. THE LATEST EDITION OF THE ABOVE PUBLICATIONS CAN BE FOUND AT: HTTP://WWW.HOUSTONPERMITTINGCENTER.ORG/OFFICE-CITY-ENGINEER/DESIGN-AND-CONSTRUCTION-STANDARDS.
2. THE DESIGN MUST BE CONSISTENT WITH THE EFFECTIVE EDITION OF HOUSTON PUBLIC WORKS INFRASTRUCTURE DESIGN MANUAL AND TCEQ (TEXAS COMMISSION ON ENVIRONMENTAL QUALITY) REQUIREMENTS.
3. THE GEOTECHNICAL INVESTIGATION FOR THIS PROJECT WAS CONDUCTED IN ACCORDANCE WITH CHAPTER 11 OF THE LATEST EDITION OF THE PUBLICATION INFRASTRUCTURE DESIGN MANUAL, PUBLISHED BY HOUSTON PUBLIC WORKS. SOILS REPORT INFORMATION IS PENDING.
4. UTILITIES PRESENTED ON THESE DRAWINGS ARE SHOWN BASED ON THE BEST AVAILABLE INFORMATION. CONTRACTOR SHALL VERIFY THE EXACT LOCATIONS IN THE FIELD PRIOR TO COMMENCING CONSTRUCTION. CONTRACTOR SHALL NOTIFY TEXAS ONE CALL AT 713-223-4567/811 OR 800-344-8377 AND LONE STAR NOTIFICATION CENTER AT 800-669-8344 AT LEAST 48 HOURS BEFORE PROCEEDING WITH ANY EXCAVATION. UTILITIES MARKED WITHIN THE PUBLIC RIGHT OF WAY OR IN EASEMENTS SHALL COMPLY WITH TAC TITLE 16, PART 1, CHAPTER 18, RULE §18.6 AND THE AMERICAN PUBLIC WORKS ADMINISTRATION (APWA) UNIFORM COLOR CODE.
5. CONTRACTOR SHALL BE RESPONSIBLE FOR DAMAGES TO EXISTING WATER, WASTEWATER, STORM WATER LINES AND TRAFFIC CONTROL DEVICES. DAMAGES SHALL BE REPAIRED IN ACCORDANCE WITH THE EFFECTIVE EDITION OF HOUSTON PUBLIC WORKS, STANDARD CONSTRUCTION SPECIFICATIONS FOR WASTEWATER COLLECTION SYSTEM, WATER LINES, STORM DRAINAGE, STREET PAVING, AND TRAFFIC AND STANDARD CONSTRUCTION DETAILS FOR WASTEWATER COLLECTION SYSTEMS, WATER LINES, STORM DRAINAGE, STREET PAVING, AND TRAFFIC, REFERENCED ABOVE AND SUPPLEMENTS, ADDENDA AND AMENDMENTS THERETO, AT NO ADDITIONAL COST TO THE CITY OF HOUSTON.
6. CONTRACTOR SHALL NOTIFY THE OFFICE OF THE CITY ENGINEER, HOUSTON PUBLIC WORKS @ 832-394-9098 OR VIA FAX AT 832-395-4424 FOR INSPECTION AT LEAST 48 HOURS PRIOR TO COMMENCING CONSTRUCTION.
7. ADEQUATE DRAINAGE SHALL BE MAINTAINED AT ALL TIMES DURING CONSTRUCTION AND ANY DRAINAGE DITCH OR STRUCTURE DISTURBED DURING CONSTRUCTION SHALL BE RESTORED TO EXISTING CONDITIONS OR BETTER AND TO THE SATISFACTION OF THE OWNING AUTHORITY.
8. CONTRACTOR SHALL TAKE NECESSARY PRECAUTIONS TO PROTECT ROOT SYSTEMS OF SHRUBS, PLANTS AND TREES ALONG THE AREA OF EXCAVATION.
9. CONTRACTOR SHALL COMPLY WITH LATEST EDITION OF OSHA REGULATIONS AND THE STATE OF TEXAS LAWS CONCERNING EXCAVATION.
10. CONTRACTOR SHALL MAINTAIN A SET OF REDLINE DRAWINGS AND RECORD AS-BUILT CONDITIONS DURING CONSTRUCTION. THESE AS-BUILT DRAWINGS WILL BE SUBMITTED TO THE DESIGN CONSULTANT WHO WILL MAKE THE CHANGES ON THE ORIGINAL TRACINGS, LABEL EACH SHEET IN THE SET AS "RECORD DRAWINGS", AND RETURN IT TO THE OFFICE OF THE CITY ENGINEER.

STORM CONSTRUCTION NOTES:

1. STORM SEWER SHALL BE REINFORCED CONCRETE PIPE (C-76, CLASS III), AND SHALL BE INSTALLED, BEDDED, AND BACK FILLED IN ACCORDANCE WITH THE CITY OF HOUSTON DRAWING NOS. 2317-02, 02317-3, 02317-05, 02317-06, AND 02317-07 AS APPLICABLE UNLESS OTHERWISE SHOWN ON THE DRAWINGS.
2. ALL STORM SEWER CONSTRUCTED IN SIDELOT EASEMENT SHALL BE R.C.P (C-76, CLASSIII) AND SHALL BE EMBEDDED IN ACCORDANCE WITH THE CITY OF HOUSTON DRAWING NOS. 02317-02, 02317-03, 02317-05, 02317-06, AND 02317-07 AS APPLICABLE.
3. ALL SEWER UNDER PROPOSED OR FUTURE PAVEMENT AND TO A POINT ONE (1) FOOT BACK OF ALL PROPOSED OR FUTURE CURBS SHALL BE BACKFILLED WITH 1-1/2 SACK CEMENT/C.Y. STABILIZED SAND TO WITHIN ONE (1) FOOT OF SUBGRADE. THE REMAINING DEPTH OF TRENCH SHALL BE BACKFILLED WITH SUITABLE EARTH MATERIAL.
4. ALL TRENCH BACKFILL SHALL BE IN 8" LIFTS, WITH TESTS TAKEN AT 100 FOOT INTERVALS IN EACH LIFT, AND MECHANICALLY COMPACTED TO A DENSITY OF NOT LESS THAN 95% OF THE MAXIMUM DRY DENSITY AS DETERMINED BY THE STANDARD PROCTOR COMPACTION TEST (ASTM D-698/AASHTO T99).
5. CIRCULAR AND ELLIPTICAL REINFORCED CONCRETE PIPE SHALL BE INSTALLED USING RUBBER GASKET JOINT CONFORMING TO ASTM C443 AND ASTM C877 RESPECTIVELY.
6. ALL STORM SEWER PIPES AND INLET LEADS SHALL BE 24" AND LARGER R.C.P. (C-76, CLASS III).
7. ALL PROPOSED PIPE STUB-OUTS FROM MANHOLES AND INLET LEADS ARE TO BE PLUGGED WITH 8" BRICK WALLS UNLESS OTHERWISE NOTED.
8. MINIMUM HORIZONTAL CLEARANCE BETWEEN ANY STORM PIPE AND BOX SHALL BE AT LEAST 48-INCHES FROM EXTERIOR OF THE STORM PIPE OR BOX TO THE EXTERIOR OF THE EXISTING OR PROPOSED PUBLIC OR PRIVATE UTILITY AND OTHER APPURTENANCES. MINIMUM VERTICAL CLEARANCE BETWEEN ANY STORM PIPE AND BOX SHALL BE AT LEAST 24-INCHES FROM EXTERIOR OF THE STORM PIPE OR BOX TO THE EXTERIOR OF THE EXISTING OR PROPOSED PUBLIC OR PRIVATE UTILITY AND OTHER APPURTENANCES.
9. ADJUST MANHOLE COVERS TO GRADE CONFORMING TO REQUIREMENTS OF SECTION 02086-ADJUSTING MANHOLES, INLETS, AND VALVE BOXES TO GRADE.
10. THE CONTRACTOR SHALL BE RESPONSIBLE FOR PROTECTING, MAINTAINING, AND RESTORING ANY BACK SLOPE DRAINAGE SYSTEM DISTURBED AS A RESULT OF THIS WORK.
11. ALL DITCHES SHALL BE GRADED TO PROPOSED ELEVATIONS TO INSURE PROPER DRAINAGE. ALL OUTFALLS SHALL BE PROPERLY BACKFILLED AND COMPACTED. ALL DISTURBED AREA SHALL BE REGRADED, SEEDED, AND FERTILIZED.
12. ALL DRIVEWAYS WILL BE LOCATED TO AVOID EXISTING CURB INLET STRUCTURES.

A. GENERAL CIVIL NOTES

1. ALL CIVIL WORK SHALL CONFORM TO THE CONTRACT DOCUMENTS AND APPLICABLE CITY OF HOUSTON REQUIREMENTS, INCLUDING THE PROJECT-APPLICABLE INFRASTRUCTURE DESIGN MANUAL, STANDARD CONSTRUCTION SPECIFICATIONS, STANDARD DETAILS, AND PROJECT-SPECIFIC SPECIFICATIONS.
2. NO DEVIATION FROM THE CONTRACT DRAWINGS OR SPECIFICATIONS SHALL BE MADE WITHOUT APPROVAL IN ACCORDANCE WITH THE CONTRACT DOCUMENTS.
3. CONTRACTOR SHALL VERIFY EXISTING. CONDITIONS, ELEVATIONS, AND DIMENSIONS AFFECTING THE WORK PRIOR TO CONSTRUCTION OF THE AFFECTED WORK. REPORT DISCREPANCIES BETWEEN FIELD CONDITIONS AND THE CONTRACT DOCUMENTS TO THE ENGINEER PRIOR TO PROCEEDING WITH THE AFFECTED WORK.
4. DO NOT SCALE DIMENSIONS OR ELEVATIONS FROM THE DRAWINGS.
5. CONTRACTOR SHALL COORDINATE CIVIL WORK WITH STRUCTURAL, ARCHITECTURAL, PROCESS MECHANICAL, ELECTRICAL, INSTRUMENTATION AND CONTROL, PLUMBING, AND OTHER APPLICABLE DISCIPLINE CONTRACT DOCUMENTS.
6. REPORT CONFLICTS, DISCREPANCIES, ERRORS, OR OMISSIONS AFFECTING THE WORK TO THE ENGINEER PRIOR TO CONSTRUCTION OF THE AFFECTED WORK.
7. PROTECT EXISTING STRUCTURES, UTILITIES, PIPING, EQUIPMENT, PAVEMENT, DRAINAGE FACILITIES, AND OTHER IMPROVEMENTS DESIGNATED TO REMAIN.
8. MAINTAIN ACCESS TO EXISTING OPERATING FACILITIES DURING CONSTRUCTION EXCEPT AS OTHERWISE INDICATED OR AUTHORIZED BY THE OWNER.
9. COORDINATE INTERRUPTIONS OF EXISTING UTILITIES, PROCESS SYSTEMS, AND SERVICES WITH THE OWNER. DO NOT INTERRUP, OPERATE, MODIFY, OR OTHERWISE AFFECT EXISTING PLANT SYSTEMS WITHOUT PRIOR AUTHORIZATION.
10. EXISTING FEATURES SHOWN OUTSIDE OR ADJACENT TO THE LIMITS OF WORK ARE SHOWN FOR REFERENCE AND COORDINATION.
11. RESTORE AREAS DISTURBED BY CONSTRUCTION IN ACCORDANCE WITH THE CONTRACT DOCUMENTS. WHERE FINAL GRADES OR SURFACE IMPROVEMENTS ARE NOT OTHERWISE INDICATED, RESTORE DISTURBED AREAS TO A CONDITION COMPATIBLE WITH THE ADJACENT EXISTING CONDITIONS.
12. PROVIDE SMOOTH TRANSITIONS BETWEEN PROPOSED AND EXISTING PAVEMENT, GRAVEL, SIDEWALK, EARTHEN, AND OTHER FINISHED SURFACES UNLESS OTHERWISE SHOWN.
13. LAYDOWN/STAGING AREA LOCATION WILL BE SUBMITTED BY CONTRACTOR FOR OWNER'S APPROVAL.

B. EXISTING CONDITIONS AND UTILITY NOTES

1. EXISTING SURFACE AND SUBSURFACE FEATURES AND UTILITIES SHOWN ON THE DRAWINGS ARE BASED ON AVAILABLE RECORD INFORMATION, SURVEY INFORMATION, AND FIELD OBSERVATIONS. LOCATIONS AND ELEVATIONS SHALL BE CONSIDERED APPROXIMATE UNLESS OTHERWISE INDICATED.
2. CONTRACTOR SHALL FIELD VERIFY THE LOCATION, SIZE, AND ELEVATION OF EXISTING UTILITIES AT PROPOSED CONNECTIONS, CROSSINGS, FOUNDATIONS, EXCAVATIONS, AND OTHER LOCATIONS WHERE EXISTING UTILITIES MAY CONFLICT WITH THE WORK PRIOR TO CONSTRUCTION OF THE AFFECTED WORK.
3. WHERE EXISTING UTILITIES OR FACILITIES ARE ENCOUNTERED THAT ARE NOT SHOWN, OR ARE FOUND AT LOCATIONS, SIZES, OR ELEVATIONS DIFFERENT FROM THOSE SHOWN, PROTECT THE FACILITY AND NOTIFY THE ENGINEER PRIOR TO PROCEEDING WITH THE AFFECTED WORK.
4. SUPPORT AND PROTECT EXISTING UTILITIES AND FACILITIES DESIGNATED TO REMAIN DURING CONSTRUCTION.
5. DO NOT REMOVE, RELOCATE, ABANDON, OPERATE, OR OTHERWISE MODIFY AN EXISTING UTILITY OR PROCESS FACILITY UNLESS SPECIFICALLY INDICATED ON THE CONTRACT DRAWINGS OR AUTHORIZED BY THE OWNER.
6. VERIFY REQUIRED CLEARANCES BETWEEN PROPOSED IMPROVEMENTS AND EXISTING UTILITIES PRIOR TO CONSTRUCTION OF THE AFFECTED WORK. NOTIFY THE ENGINEER OF CONFLICTS PRIOR TO PROCEEDING.
7. EXISTING UTILITY INFORMATION SHOWN ON THE DRAWINGS DOES NOT RELIEVE THE CONTRACTOR OF REQUIRED UTILITY LOCATION AND NOTIFICATION REQUIREMENTS PRIOR TO EXCAVATION.

C. SURVEY AND CONTROL NOTES

1. HORIZONTAL AND VERTICAL CONTROL SHALL BE BASED ON THE PROJECT SURVEY AND CONTROL INFORMATION IDENTIFIED ON THIS SHEET.
2. ALL ELEVATIONS SHOWN ON THE CIVIL DRAWINGS ARE REFERENCED TO THE PROJECT VERTICAL DATUM IDENTIFIED ON THIS SHEET UNLESS OTHERWISE NOTED.
3. CONTRACTOR SHALL VERIFY PROJECT BENCHMARKS AND CONTROL PRIOR TO COMMENCING CONSTRUCTION. REPORT DISCREPANCIES TO THE ENGINEER PRIOR TO PROCEEDING WITH THE AFFECTED WORK.
4. CONTRACTOR SHALL PROTECT PROJECT BENCHMARKS, MONUMENTS, AND CONTROL POINTS TO REMAIN.
5. REPORT DISTURBED OR DAMAGED CONTROL TO THE ENGINEER

D. GEOTECHNICAL INFORMATION

1. THE GEOTECHNICAL INVESTIGATION FOR THIS PROJECT WAS PERFORMED BY HVJ ASSOCIATES, REPORT TITLED "HVJ FINAL GEOTECHNICAL REPORT' DATED, PROJECT/REPORT NO. HGT260175. REFER TO THE CONTRACT DOCUMENTS AND PROJECT GEOTECHNICAL REPORT FOR APPLICABLE SITE PREPARATION, EARTHWORK, FILL, COMPACTION, SUBGRADE, AND OTHER GEOTECHNICAL REQUIREMENTS.

HORIZONTAL DATUM

BASIS OF COORDINATES

THE HORIZONTAL DATUM IS BASED ON THE TEXAS COORDINATE SYSTEM OF 1983, SOUTH CENTRAL ZONE (4204), NAD 83 (2011), ITRF (EPOCH 2010.0000).
COORDINATES ARE GRID VALUES AND ARE TIED TO THE NATIONAL SPATIAL REFERENCE SYSTEM (NSRS).
ALL DISTANCES ARE SURFACE VALUES UNLESS OTHERWISE NOTED.
TO CONVERT SURFACE VALUES TO GRID VALUES, MULTIPLY BY THE COMBINED SCALE FACTOR OF 0.999870017.

VERTICAL DATUM

BENCHMARK:

PRIMARY BENCHMARK: CITY OF HOUSTON SITE CONTROL
MONUMENT NO. 5062-8407 (TSARP RM 050085).
PROJECT ELEVATIONS ARE BASED ON NAVD 88 (GEOID 99).
TSARP RM 050085 WAS HELD FOR VERTICAL CONTROL.
PUBLISHED ELEVATION: 86.80 FEET (NAVD 88, GEOID 99).
TO CONVERT ELEVATIONS FROM NAVD 88 (GEOID 99) TO NAVD 88 (GEOID 18), SUBTRACT 0.42 FEET.

FLOOD PLAIN NOTES

THE SUBJECT SITE IS LOCATED WITHIN THE 100-YEAR SPECIAL FLOOD HAZARD AREA, ZONE "AE", AS SHOWN ON THE FEDERAL EMERGENCY MANAGEMENT AGENCY (FEMA) FLOOD INSURANCE RATE MAP (FIRM), MAP NO. 48201C0465M, PANEL 465 OF 1150, FOR HARRIS COUNTY, TEXAS AND INCORPORATED AREAS, DATED JUNE 9, 2014. ANY REFERENCE TO THE 100-YEAR FLOOD PLAIN OR FLOOD HAZARD ZONES IS BASED ON DATA PROVIDED BY THE FEDERAL EMERGENCY MANAGEMENT AGENCY'S NATIONAL FLOOD INSURANCE PROGRAM AND SHOULD NOT BE INTERPRETED AS A STUDY OR DETERMINATION OF THE FLOODING PROPENSITIES OF THIS PROPERTY.

SWPPP CONSTRUCTION NOTES:

1. CONTRACTOR SHALL IMPLEMENT INLET PROTECTION DEVICES AND REINFORCED FILTER FABRIC BARRIER ALONG ROAD AND SIDE DITCHES AT LOCATIONS SHOWN ON THE TYPICAL STORM WATER POLLUTION PREVENTION (SWPP) PLANS TO KEEP SILT AND OR EXCAVATED MATERIALS FROM ENTERING INTO THE STORM WATER INLETS AND DITCHES EVENTUALLY POLLUTING THE RECEIVING STORM.
2. DURING THE EXCAVATION PHASE OF THE PROJECT, CONTRACTOR SHALL SCHEDULE THE WORK IN SHORT SEGMENTS SO THAT EXCAVATION MATERIAL CAN BE QUICKLY HAULED AWAY FROM THE SITE AND TO PREVENT IT FROM STAYING UNCOLLECTED ON THE EXISTING PAVEMENT. ANY LOOSE EXCAVATED MATERIAL WHICH FALLS ON PAVEMENTS OR DRIVEWAYS SHALL BE SWEPT BACK INTO THE EXCAVATED AREA.
3. CONTRACTOR SHALL CLEAN UP THE EXISTING STREET INTERSECTIONS AND DRIVEWAYS DAILY, AS NECESSARY, TO REMOVE ANY EXCESS MUD, SILT OR ROCK TRACKED FORM THE EXCAVATED AREA.
4. CONTRACTOR SHALL FOLLOW GOOD HOUSEKEEPING PRACTICES DURING THE CONSTRUCTION OF THE PROJECT, ALWAYS CLEANING UP DIRT AND LOOSE MATERIAL AS CONSTRUCTION PROGRESSES.
5. CONTRACTOR TO INSPECT AND MAINTAIN THE AREAS LISTED BELOW AT LEAST ONCE EVERY FOURTEEN (14) CALENDAR DAYS AND WITHIN 24 HOURS OF THE END OF A STORM EVENT OF 0.5 INCHES OR GREATER.
   - DISTURBED AREAS OF THE CONSTRUCTION SITE THAT HAVE NOT BEEN FINALLY STABILIZED.
   - AREAS USED FOR STORAGE OF MATERIALS THAT ARE EXPOSED TO PRECIPITATION.
   - STRUCTURAL CONTROL MEASURES.
   - LOCATIONS WHERE VEHICLES ENTER OR EXIT THE SITE.
6. CONTRACTOR TO BE RESPONSIBLE TO MAINTAIN EXISTING DITCHES AND OR CULVERTS FOR UNOBSTRUCTED DRAINAGE AT ALL TIMES. WHERE SODDING IS DISTURBED BY EXCAVATION ON BACKFILLING OPERATIONS, SUCH AREAS SHALL BE REPLACED BY SEEDING OR SODDING. SLOPES 4:1 OR STEEPER SHALL BE REPLACED BY BLOCK SODDING.

ABBREVIATIONS:

RD	ROAD
ROW	RIGHT OF WAY
SAN	SANITARY
SSE	SANITARY SEWER EASEMENT
ST	STREET
STM	STORM
SWR	SEWER
TBM	TEMPORARY BENCHMARK
TYP	TYPICAL
UE	UTILITY EASEMENT
WL	WATER LINE
WLE	WATER LINE EASEMENT
WM	WATER METER
WV	WATER VALVE
WWTP	WASTE WATER TREATMENT PLANT
MH	MANHOLE

ABBREVIATIONS:

NTS	NOT TO SCALE
OH	OVERHEAD
PL	PROPERTY LINE
PROP	PROPOSED
PVMT	PAVEMENT

NO.	DATE	REVISION	APP.

Jacobs
JACOBS ENGINEERING GROUP INC.
818 TOWN & COUNTRY BLVD
SUITE 500 281-721-8400
TEXAS REGISTRATION NO.: F-2966

MBROH 20 ENGINEERING
11757 KATY FWY,
SUITE 625
HOUSTON, TX 77077
713-468-2545

SURVEYED BY:
FB NO.

THESE DOCUMENTS ARE FOR INTERIM REVIEW AND NOT FOR CONSTRUCTION, BIDDING OR PERMIT PURPOSES.
RESPONSIBLE ENGINEER:
JACOBS ENGINEERING GROUP INC
SRI LAKSHMI JASTI, P.E.
TEXAS REGISTRATION NO. F-2966
60% SUBMITTAL

CITY OF HOUSTON
HOUSTON PUBLIC WORKS

WHITE OAKS WWTP IMPROVEMENTS

CIVIL

GENERAL NOTES

WBS NUMBER	FOR CITY OF HOUSTON USE ONLY
R-000265-0158-3	
DRAWING SCALE	
NOT TO SCALE	
CITY OF HOUSTON PM	
SHAHIDUR RAHMAN, PE	

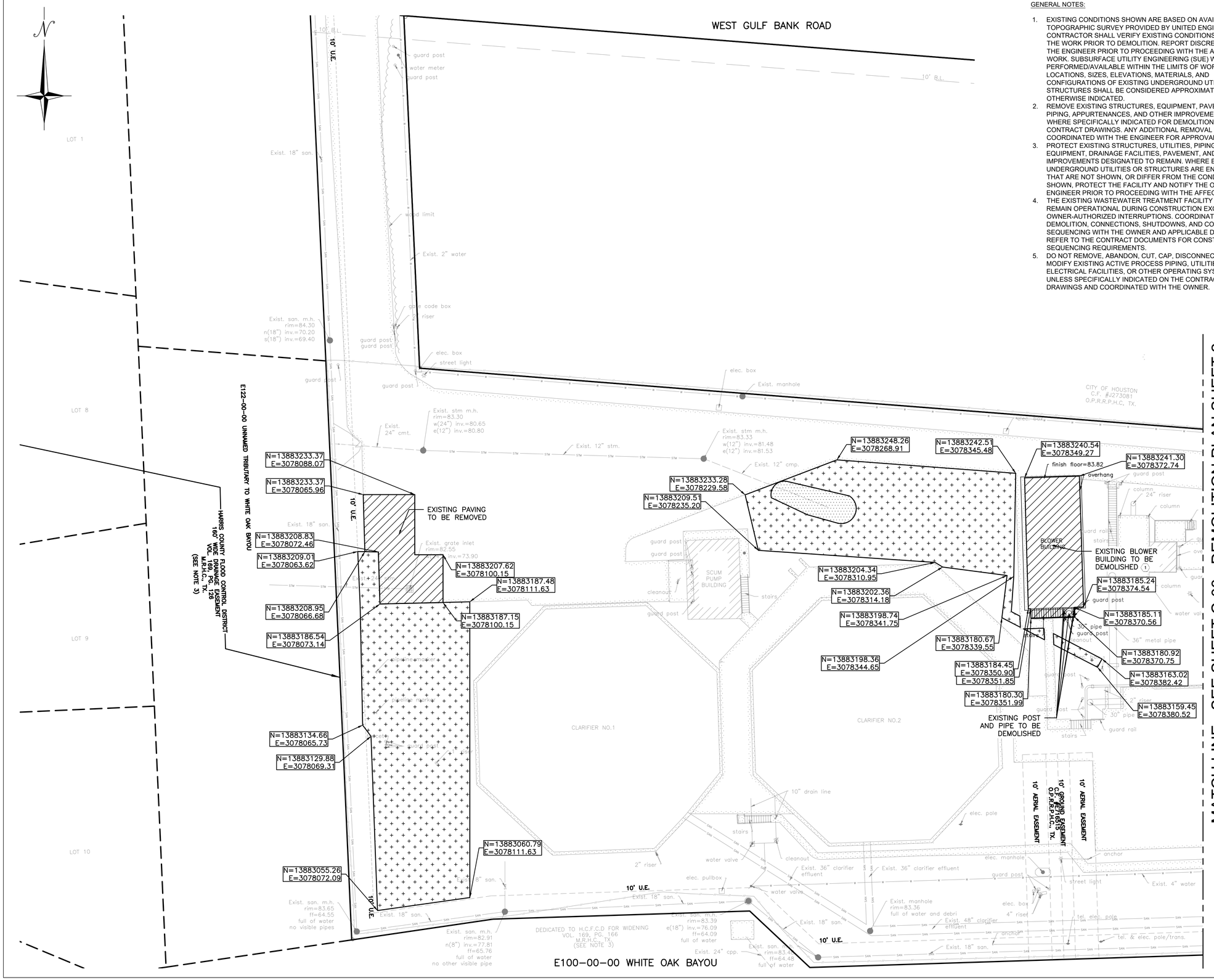

GENERAL NOTES:

1. EXISTING CONDITIONS SHOWN ARE BASED ON AVAILABLE TOPOGRAPHIC SURVEY PROVIDED BY UNITED ENGINEERS, INC, CONTRACTOR SHALL VERIFY EXISTING CONDITIONS AFFECTING THE WORK PRIOR TO DEMOLITION. REPORT DISCREPANCIES TO THE ENGINEER PRIOR TO PROCEEDING WITH THE AFFECTED WORK. SUBSURFACE UTILITY ENGINEERING (SUE) WAS NOT PERFORMED/AVAILABLE WITHIN THE LIMITS OF WORK. LOCATIONS, SIZES, ELEVATIONS, MATERIALS, AND CONFIGURATIONS OF EXISTING UNDERGROUND UTILITIES AND STRUCTURES SHALL BE CONSIDERED APPROXIMATE UNLESS OTHERWISE INDICATED.
2. REMOVE EXISTING STRUCTURES, EQUIPMENT, PAVEMENT, PIPING, APPURTENANCES, AND OTHER IMPROVEMENTS ONLY WHERE SPECIFICALLY INDICATED FOR DEMOLITION ON THE CONTRACT DRAWINGS. ANY ADDITIONAL REMOVAL SHALL BE COORDINATED WITH THE ENGINEER FOR APPROVAL.
3. PROTECT EXISTING STRUCTURES, UTILITIES, PIPING, EQUIPMENT, DRAINAGE FACILITIES, PAVEMENT, AND OTHER IMPROVEMENTS DESIGNATED TO REMAIN. WHERE EXISTING UNDERGROUND UTILITIES OR STRUCTURES ARE ENCOUNTERED THAT ARE NOT SHOWN, OR DIFFER FROM THE CONDITIONS SHOWN, PROTECT THE FACILITY AND NOTIFY THE OWNER AND ENGINEER PRIOR TO PROCEEDING WITH THE AFFECTED WORK.
4. THE EXISTING WASTEWATER TREATMENT FACILITY SHALL REMAIN OPERATIONAL DURING CONSTRUCTION EXCEPT FOR OWNER-AUTHORIZED INTERRUPTIONS. COORDINATE DEMOLITION, CONNECTIONS, SHUTDOWNS, AND CONSTRUCTION SEQUENCING WITH THE OWNER AND APPLICABLE DISCIPLINES. REFER TO THE CONTRACT DOCUMENTS FOR CONSTRUCTION SEQUENCING REQUIREMENTS.
5. DO NOT REMOVE, ABANDON, CUT, CAP, DISCONNECT, OR MODIFY EXISTING ACTIVE PROCESS PIPING, UTILITIES, ELECTRICAL FACILITIES, OR OTHER OPERATING SYSTEMS UNLESS SPECIFICALLY INDICATED ON THE CONTRACT DRAWINGS AND COORDINATED WITH THE OWNER.
6. REMOVE AND DISPOSE OF DEMOLISHED MATERIAL, CLEARING AND GRUBBING DEBRIS, AND OTHER WASTE MATERIAL OFF SITE IN ACCORDANCE WITH THE CONTRACT DOCUMENTS AND APPLICABLE REGULATORY REQUIREMENTS, EXCEPT WHERE MATERIAL IS SPECIFICALLY INDICATED FOR SALVAGE, REUSE, OR DELIVERY TO THE OWNER.
7. WHERE DEMOLITION DISTURBS EXISTING AREAS OUTSIDE THE LIMITS OF PROPOSED PERMANENT IMPROVEMENTS, RESTORE THE DISTURBED AREA TO A CONDITION COMPATIBLE WITH ADJACENT EXISTING CONDITIONS IN ACCORDANCE WITH THE CONTRACT DOCUMENTS.
8. PRIOR TO DEMOLITION, EXCAVATION, OR CONSTRUCTION THAT MAY AFFECT EXISTING UNDERGROUND FACILITIES, CONTRACTOR SHALL FIELD VERIFY THE LOCATION, SIZE, ELEVATION, MATERIAL, SERVICE STATUS, AND CONFIGURATION OF EXISTING UTILITIES AND STRUCTURES AS NECESSARY TO PERFORM THE WORK. WHERE FIELD-VERIFIED CONDITIONS DIFFER FROM THE CONTRACT DRAWINGS OR CREATE A CONFLICT WITH THE PROPOSED WORK, CONTRACTOR SHALL NOT PROCEED WITH THE AFFECTED WORK AND SHALL NOTIFY THE ENGINEER FOR RESOLUTION.
9. DURING EXCAVATION OR DEMOLITION ADJACENT TO EXISTING PIPING TO REMAIN, PROTECT PIPE, COATINGS, LININGS, JOINTS, FITTINGS, FLEXIBLE COUPLINGS, CATHODIC PROTECTION COMPONENTS, SUPPORTS, AND APPURTENANCES FROM DAMAGE.
10. DEMOLITION, CLEARING, AND GRUBBING ACTIVITIES SHALL NOT OBSTRUCT EXISTING DRAINAGE PATHS OR CHANNEL CONVEYANCE. MAINTAIN EXISTING DRAINAGE DURING DEMOLITION EXCEPT WHERE TEMPORARY MODIFICATIONS ARE SPECIFICALLY INDICATED OR AUTHORIZED.
11. CONTRACTOR SHALL PERFORM EXPLORATORY EXCAVATION OR OTHER APPROPRIATE FIELD VERIFICATION AS NECESSARY TO ESTABLISH EXISTING UTILITY AND UNDERGROUND STRUCTURE LOCATIONS AT POTENTIAL CONFLICTS PRIOR TO CONSTRUCTION OF THE AFFECTED PROPOSED IMPROVEMENTS. EXPLORATORY EXCAVATION SHALL BE COORDINATED WITH THE OWNER AND PERFORMED WITHOUT INTERRUPTION OR DAMAGE TO ACTIVE FACILITIES.
12. CONTRACTOR SHALL SUBMIT PROPOSED LAYDOWN AND MATERIAL STORAGE AREAS FOR CLIENT REVIEW AND APPROVAL PRIOR TO USE. UPON COMPLETION OF CONSTRUCTION, CONTRACTOR SHALL RESTORE ALL AREAS DISTURBED OR DAMAGED BY CONSTRUCTION ACTIVITIES, EQUIPMENT, OR TRAFFIC TO PRE-CONSTRUCTION CONDITIONS OR BETTER.

NOTES BY SYMBOL " ⬡ ":

1. REMOVE EXISTING STRUCTURE AND ASSOCIATED CIVIL IMPROVEMENTS WITHIN LIMITS SHOWN. REFER TO STRUCTURAL, PROCESS MECHANICAL, ELECTRICAL, AND OTHER DISCIPLINE DRAWINGS FOR ASSOCIATED DEMOLITION.

LEGEND

- STRUCTURE, PAVING AND EQUIPMENT DEMOLITION LIMITS
- CLEARING AND GRUBBING LIMITS
- PROPOSED 2-FT DEEP DEMUCKING OF EXISTING SWALE

NO.	DATE	REVISION	APP.

Jacobs
JACOBS ENGINEERING GROUP INC.
818 TOWN & COUNTRY BLVD
SUITE 500 281-721-8400
TEXAS REGISTRATION NO.: F-2966

MBROH 20 ENGINEERING
11757 KATY FWY,
SUITE 625
HOUSTON, TX 77077
713-468-2545

SURVEYED BY:
FB NO.

THESE DOCUMENTS ARE FOR INTERIM REVIEW AND NOT FOR CONSTRUCTION, BIDDING OR PERMIT PURPOSES.
RESPONSIBLE ENGINEER:
JACOBS ENGINEERING GROUP INC
SRI LAKSHMI JASTI, P.E.
TEXAS REGISTRATION NO. F-2966
60% SUBMITTAL

CITY OF HOUSTON
HOUSTON PUBLIC WORKS

WHITE OAKS WWTP IMPROVEMENTS

CIVIL

DEMOLITION PLAN SHEET 1

WBS NUMBER	FOR CITY OF HOUSTON USE ONLY
R-000265-0158-3	
DRAWING SCALE	
1" = 20'	
CITY OF HOUSTON PM	
SHAHIDUR RAHMAN, PE	

C-02 | SHEET NO. 10 OF 189

FILE PATH: \\ushou8-fil003\houprojects\BIA\BIA01\Mbroh Engineering\D3984701_White Oak WWTP\700CADD\702civil\702.1 PRODUCTION DRAWINGS\2-3-DEMOLITION PLAN SHEET 1-2.dwg PLOT STYLE: Coh_ctb_230809.ctb PLOTTED: 28/10/2026

FILE PATH: \\ushou8-fil003\houprojects\BIA\BIA01\Mbroh Engineering\D3984701_White Oak WWTP\700CADD\702civil\702.1 PRODUCTION DRAWINGS\2-3-DEMOLITION PLAN SHEET 1-2.dwg PLOT STYLE: Coh_ctb_230809.ctb PLOTTED: 28/10/2026

MATCH LINE - SEE SHEET C-02 - DEMOLITION PLAN SHEET 1

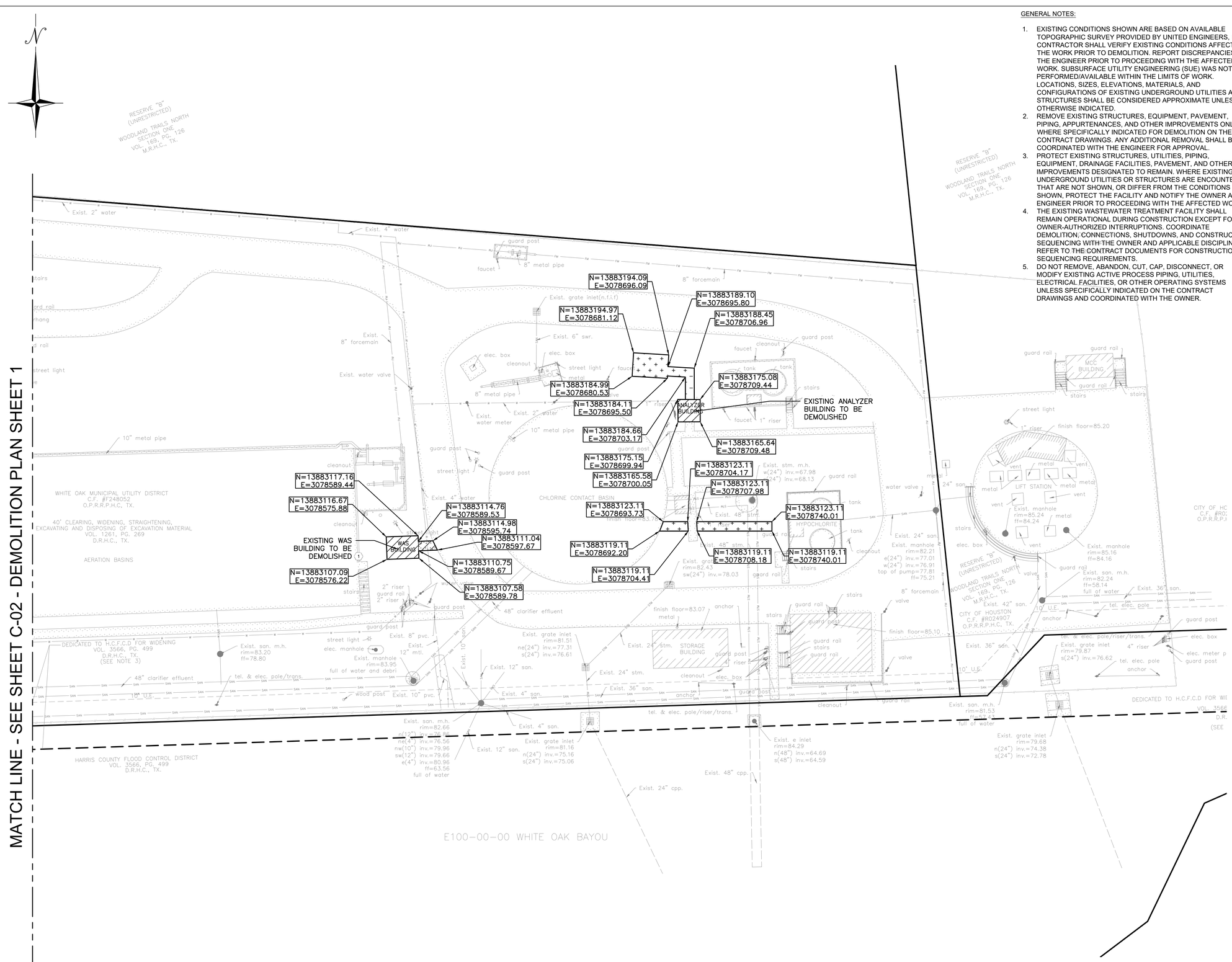

GENERAL NOTES:

1. EXISTING CONDITIONS SHOWN ARE BASED ON AVAILABLE TOPOGRAPHIC SURVEY PROVIDED BY UNITED ENGINEERS, INC, CONTRACTOR SHALL VERIFY EXISTING CONDITIONS AFFECTING THE WORK PRIOR TO DEMOLITION. REPORT DISCREPANCIES TO THE ENGINEER PRIOR TO PROCEEDING WITH THE AFFECTED WORK. SUBSURFACE UTILITY ENGINEERING (SUE) WAS NOT PERFORMED/AVAILABLE WITHIN THE LIMITS OF WORK. LOCATIONS, SIZES, ELEVATIONS, MATERIALS, AND CONFIGURATIONS OF EXISTING UNDERGROUND UTILITIES AND STRUCTURES SHALL BE CONSIDERED APPROXIMATE UNLESS OTHERWISE INDICATED.
2. REMOVE EXISTING STRUCTURES, EQUIPMENT, PAVEMENT, PIPING, APPURTENANCES, AND OTHER IMPROVEMENTS ONLY WHERE SPECIFICALLY INDICATED FOR DEMOLITION ON THE CONTRACT DRAWINGS. ANY ADDITIONAL REMOVAL SHALL BE COORDINATED WITH THE ENGINEER FOR APPROVAL.
3. PROTECT EXISTING STRUCTURES, UTILITIES, PIPING, EQUIPMENT, DRAINAGE FACILITIES, PAVEMENT, AND OTHER IMPROVEMENTS DESIGNATED TO REMAIN. WHERE EXISTING UNDERGROUND UTILITIES OR STRUCTURES ARE ENCOUNTERED THAT ARE NOT SHOWN, OR DIFFER FROM THE CONDITIONS SHOWN, PROTECT THE FACILITY AND NOTIFY THE OWNER AND ENGINEER PRIOR TO PROCEEDING WITH THE AFFECTED WORK.
4. THE EXISTING WASTEWATER TREATMENT FACILITY SHALL REMAIN OPERATIONAL DURING CONSTRUCTION EXCEPT FOR OWNER-AUTHORIZED INTERRUPTIONS. COORDINATE DEMOLITION, CONNECTIONS, SHUTDOWNS, AND CONSTRUCTION SEQUENCING WITH THE OWNER AND APPLICABLE DISCIPLINES. REFER TO THE CONTRACT DOCUMENTS FOR CONSTRUCTION SEQUENCING REQUIREMENTS.
5. DO NOT REMOVE, ABANDON, CUT, CAP, DISCONNECT, OR MODIFY EXISTING ACTIVE PROCESS PIPING, UTILITIES, ELECTRICAL FACILITIES, OR OTHER OPERATING SYSTEMS UNLESS SPECIFICALLY INDICATED ON THE CONTRACT DRAWINGS AND COORDINATED WITH THE OWNER.
6. REMOVE AND DISPOSE OF DEMOLISHED MATERIAL, CLEARING AND GRUBBING DEBRIS, AND OTHER WASTE MATERIAL OFF SITE IN ACCORDANCE WITH THE CONTRACT DOCUMENTS AND APPLICABLE REGULATORY REQUIREMENTS, EXCEPT WHERE MATERIAL IS SPECIFICALLY INDICATED FOR SALVAGE, REUSE, OR DELIVERY TO THE OWNER.
7. WHERE DEMOLITION DISTURBS EXISTING AREAS OUTSIDE THE LIMITS OF PROPOSED PERMANENT IMPROVEMENTS, RESTORE THE DISTURBED AREA TO A CONDITION COMPATIBLE WITH ADJACENT EXISTING CONDITIONS IN ACCORDANCE WITH THE CONTRACT DOCUMENTS.
8. PRIOR TO DEMOLITION, EXCAVATION, OR CONSTRUCTION THAT MAY AFFECT EXISTING UNDERGROUND FACILITIES, CONTRACTOR SHALL FIELD VERIFY THE LOCATION, SIZE, ELEVATION, MATERIAL, SERVICE STATUS, AND CONFIGURATION OF EXISTING UTILITIES AND STRUCTURES AS NECESSARY TO PERFORM THE WORK. WHERE FIELD-VERIFIED CONDITIONS DIFFER FROM THE CONTRACT DRAWINGS OR CREATE A CONFLICT WITH THE PROPOSED WORK, CONTRACTOR SHALL NOT PROCEED WITH THE AFFECTED WORK AND SHALL NOTIFY THE ENGINEER FOR RESOLUTION.
9. DURING EXCAVATION OR DEMOLITION ADJACENT TO EXISTING PIPING TO REMAIN, PROTECT PIPE, COATINGS, LININGS, JOINTS, FITTINGS, FLEXIBLE COUPLINGS, CATHODIC PROTECTION COMPONENTS, SUPPORTS, AND APPURTENANCES FROM DAMAGE.
10. DEMOLITION, CLEARING, AND GRUBBING ACTIVITIES SHALL NOT OBSTRUCT EXISTING DRAINAGE PATHS OR CHANNEL CONVEYANCE. MAINTAIN EXISTING DRAINAGE DURING DEMOLITION EXCEPT WHERE TEMPORARY MODIFICATIONS ARE SPECIFICALLY INDICATED OR AUTHORIZED.
11. CONTRACTOR SHALL PERFORM EXPLORATORY EXCAVATION OR OTHER APPROPRIATE FIELD VERIFICATION AS NECESSARY TO ESTABLISH EXISTING UTILITY AND UNDERGROUND STRUCTURE LOCATIONS AT POTENTIAL CONFLICTS PRIOR TO CONSTRUCTION OF THE AFFECTED PROPOSED IMPROVEMENTS. EXPLORATORY EXCAVATION SHALL BE COORDINATED WITH THE OWNER AND PERFORMED WITHOUT INTERRUPTION OR DAMAGE TO ACTIVE FACILITIES.
12. CONTRACTOR SHALL SUBMIT PROPOSED LAYDOWN AND MATERIAL STORAGE AREAS FOR CLIENT REVIEW AND APPROVAL PRIOR TO USE. UPON COMPLETION OF CONSTRUCTION, CONTRACTOR SHALL RESTORE ALL AREAS DISTURBED OR DAMAGED BY CONSTRUCTION ACTIVITIES, EQUIPMENT, OR TRAFFIC TO PRE-CONSTRUCTION CONDITIONS OR BETTER.

NOTES BY SYMBOL " ⬡ ":

1. REMOVE EXISTING STRUCTURE AND ASSOCIATED CIVIL IMPROVEMENTS WITHIN LIMITS SHOWN. REFER TO STRUCTURAL, PROCESS MECHANICAL, ELECTRICAL, AND OTHER DISCIPLINE DRAWINGS FOR ASSOCIATED DEMOLITION.

LEGEND

- STRUCTURE, PAVING AND EQUIPMENT DEMOLITION LIMITS
- CLEARING AND GRUBBING LIMITS

NO.	DATE	REVISION	APP.

Jacobs
JACOBS ENGINEERING GROUP INC.
818 TOWN & COUNTRY BLVD
SUITE 500 281-721-8400
TEXAS REGISTRATION NO.: F-2966

MBROH ENGINEERING 20
11757 KATY FWY,
SUITE 625
HOUSTON, TX 77077
713-468-2545

SURVEYED BY:
FB NO.

THESE DOCUMENTS ARE FOR INTERIM REVIEW AND NOT FOR CONSTRUCTION, BIDDING OR PERMIT PURPOSES.
RESPONSIBLE ENGINEER:
JACOBS ENGINEERING GROUP INC
SRI LAKSHMI JASTI, P.E.
TEXAS REGISTRATION NO. F-2966
60% SUBMITTAL

CITY OF HOUSTON
HOUSTON PUBLIC WORKS

WHITE OAKS WWTP IMPROVEMENTS

CIVIL

DEMOLITION PLAN SHEET 2

WBS NUMBER	FOR CITY OF HOUSTON USE ONLY
R-000265-0158-3	
DRAWING SCALE	
1" = 20'	
CITY OF HOUSTON PM	
SHAHIDUR RAHMAN, PE	

C-03 | SHEET NO. 11 OF 189

FILE PATH: \\ushou8-fil003\houprojects\BIA\BIA01\Mbroh Engineering\D39847101_White Oak WWTP\700CADD\702civil\702.1 PRODUCTION DRAWINGS\4-OVERALL PROPOSED SITE PLAN.dwg PLOT STYLE: Coh_ctb_230809.ctb PLOTTED: 28/10/2026

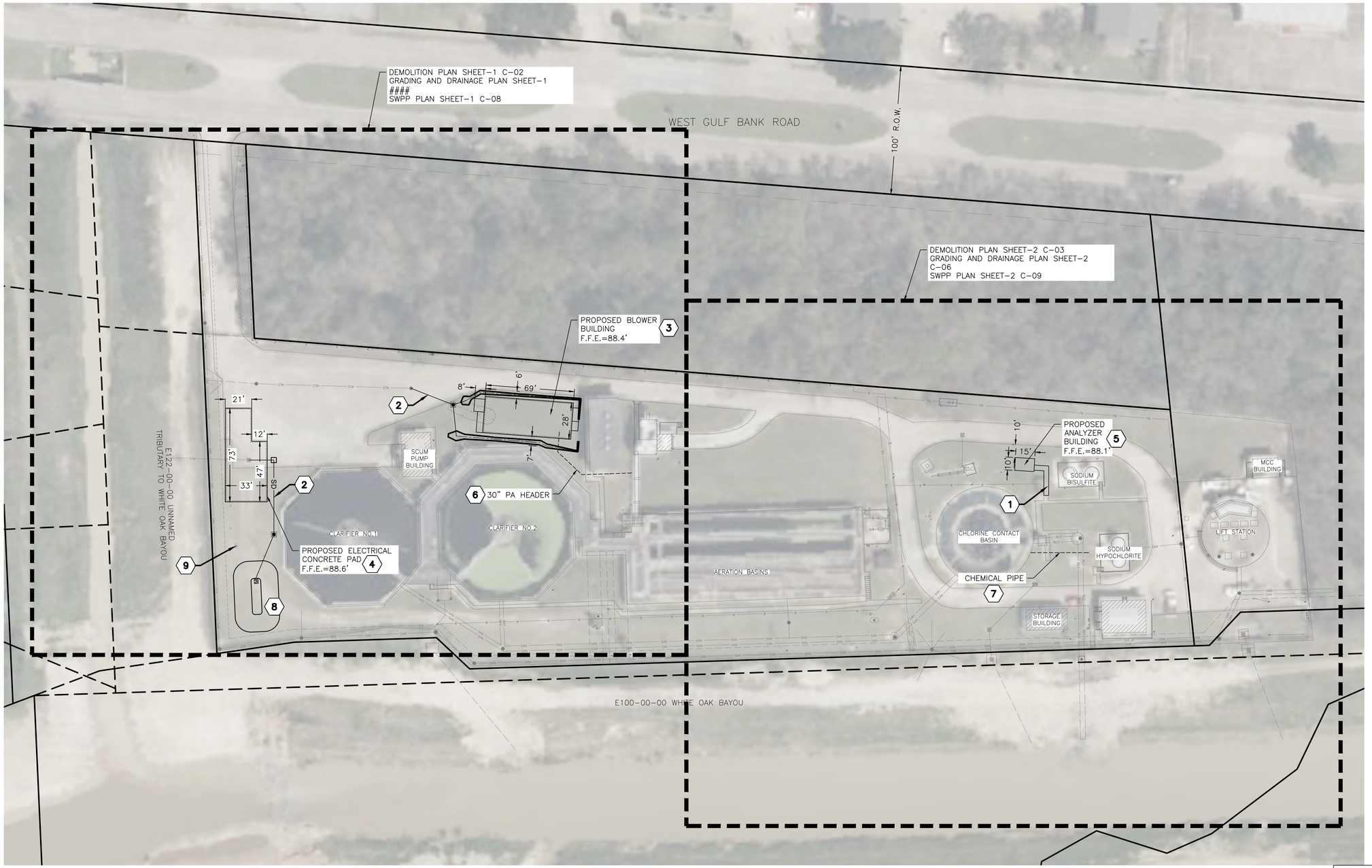

GENERAL NOTES:

1. FOR GENERAL CIVIL NOTES, LEGEND, AND ABBREVIATIONS, SEE DRAWING C-01.
2. FOR EXISTING CONDITIONS AND DEMOLITION REQUIREMENTS, SEE DRAWINGS C-02 AND C-03.
3. FOR DETAILED GRADING, DRAINAGE, FINISHED ELEVATIONS, AND GRADING LIMITS, SEE DRAWINGS C-05 AND C-06.
4. FOR STORMWATER POLLUTION PREVENTION AND EROSION AND SEDIMENT CONTROL REQUIREMENTS, SEE DRAWINGS C-08 AND C-09.
5. PROPOSED BUILDING, STRUCTURE, AND EQUIPMENT PAD LOCATIONS SHOWN ON THIS DRAWING SHALL BE COORDINATED WITH THE APPLICABLE STRUCTURAL, ARCHITECTURAL, PROCESS MECHANICAL, ELECTRICAL, INSTRUMENTATION AND CONTROL, AND OTHER DISCIPLINE DRAWINGS.
6. EXISTING FEATURES SHOWN ARE FOR SITE ORIENTATION AND COORDINATION. REFER TO THE DETAILED CIVIL DRAWINGS AND APPLICABLE DISCIPLINE DRAWINGS FOR ADDITIONAL INFORMATION.

NOTES BY SYMBOL " ⬡ ":

1. PROPOSED CONCRETE SIDEWALK.
2. PROPOSED STORM LINE REFER TO GRADING DRAINAGE SHEET.
3. PROPOSED BLOWER BUILDING. REFER TO STRUCTURAL, ARCHITECTURAL, PROCESS MECHANICAL, ELECTRICAL, AND OTHER APPLICABLE DISCIPLINE DRAWINGS FOR BUILDING AND EQUIPMENT INFORMATION.
4. PROPOSED ELECTRICAL EQUIPMENT CONCRETE PAD. REFER TO STRUCTURAL AND ELECTRICAL DRAWINGS FOR PAD AND EQUIPMENT INFORMATION.
5. PROPOSED ANALYZER BUILDING. REFER TO STRUCTURAL, ARCHITECTURAL, PROCESS MECHANICAL, ELECTRICAL, AND OTHER APPLICABLE DISCIPLINE DRAWINGS FOR BUILDING AND EQUIPMENT INFORMATION.
6. PROPOSED 30-INCH PA HEADER. REFER TO PROCESS MECHANICAL DRAWINGS FOR SIZE, MATERIAL, ELEVATION, CONNECTIONS, AND INSTALLATION REQUIREMENTS.
7. PROPOSED CHEMICAL PIPING. REFER TO PROCESS MECHANICAL DRAWINGS FOR SIZE, MATERIAL, ELEVATION, CONNECTIONS, AND INSTALLATION REQUIREMENTS.
8. PROPOSED DETENTION POND REFER GRADING DRAINAGE SHEET
9. FIELD VERIFY EXISTING POTABLE WATER LINE LOCATION, CONFIGURATION, AND FLOW DIRECTION. CONTRACTOR SHALL COORDINATE AND PERFORM ANY REQUIRED FAUCET/STUB-OUT RELOCATION TO MATCH ACTUAL FIELD CONDITIONS.

NO.	DATE	REVISION	APP.

Jacobs

JACOBS ENGINEERING GROUP INC.
818 TOWN & COUNTRY BLVD
SUITE 500 281-721-8400
TEXAS REGISTRATION NO.: F-2966

MBROH 20 ENGINEERING

11757 KATY FWY,
SUITE 625
HOUSTON, TX 77077
713-468-2545

SURVEYED BY:

FB NO.

THESE DOCUMENTS ARE FOR INTERIM REVIEW AND NOT FOR CONSTRUCTION, BIDDING OR PERMIT PURPOSES.
RESPONSIBLE ENGINEER:
JACOBS ENGINEERING GROUP INC
SRI LAKSHMI JASTI, P.E.
TEXAS REGISTRATION NO. F-2966
60% SUBMITTAL

CITY OF HOUSTON
HOUSTON PUBLIC WORKS

WHITE OAKS WWTP IMPROVEMENTS

CIVIL

PROPOSED SITE PLAN

WBS NUMBER	FOR CITY OF HOUSTON USE ONLY
R-000265-0158-3	
DRAWING SCALE	
1" = 40'	
CITY OF HOUSTON PM	
SHAHIDUR RAHMAN, PE	

FILE PATH: \\ushou8-fil003\houprojects\BIA\BIA01\Mbroh Engineering\D3984701_White Oak WWTP\700CADD\702civil\702.1 PRODUCTION DRAWINGS\5-GRADING AND DRAINAGE DETAIL PLAN SHEET1.dwg USE: Coh_ctb_230809.ctb PLOTTED: 28/10/2026

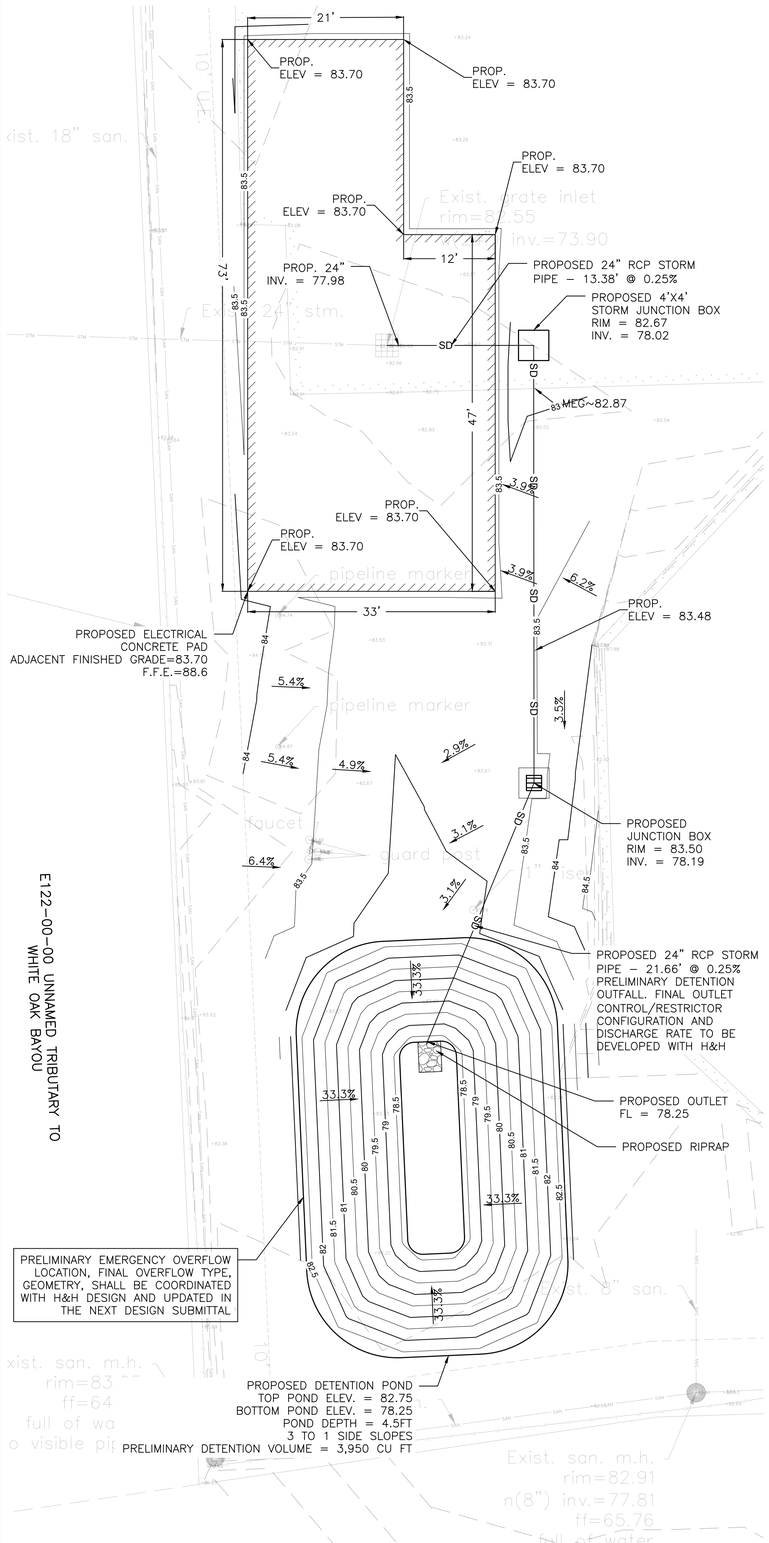

NOTE:

STORM SEWER PIPE SIZES SHALL BE AS SHOWN ON THE DRAWING. PIPE SIZES, SLOPES, AND ASSOCIATED HYDRAULIC PARAMETERS SHOWN AT 60% ARE PRELIMINARY AND SUBJECT TO FINAL H&H COORDINATION.

DRAINAGE DESIGN SHOWN AT THE 60% SUBMITTAL IS PRELIMINARY. DRAINAGE AREAS, DESIGN FLOWS, STORM SEWER AND DITCH/SWALE HYDRAULICS, DETENTION REQUIREMENTS, DESIGN WATER SURFACE ELEVATIONS, OUTFALL CONDITIONS, AND EMERGENCY OVERFLOW REQUIREMENTS WILL BE FURTHER EVALUATED IN COORDINATION WITH THE PROJECT H&H DESIGN. CIVIL GRADING AND DRAINAGE FEATURES WILL BE UPDATED AS REQUIRED FOR THE NEXT DESIGN SUBMITTAL.

GENERAL NOTES:

1. FOR GENERAL CIVIL, GRADING AND DRAINAGE, SURVEY, AND CONTROL NOTES, SEE DRAWING G-1.
2. PROPOSED CONTOURS AND SPOT ELEVATIONS REPRESENT FINISHED GRADE UNLESS OTHERWISE NOTED.
3. MATCH EXISTING GRADES AT THE LIMITS OF PROPOSED GRADING. CONTRACTOR SHALL VERIFY EXISTING GRADES AT TIE-IN LOCATIONS PRIOR TO CONSTRUCTION OF THE AFFECTED WORK AND REPORT DISCREPANCIES TO THE ENGINEER.
4. FINISHED FLOOR ELEVATIONS, TOP-OF-PAD ELEVATIONS, AND OTHER STRUCTURE ELEVATIONS SHOWN SHALL BE COORDINATED WITH THE APPLICABLE STRUCTURAL, ARCHITECTURAL, PROCESS, AND ELECTRICAL DRAWINGS.
5. EXISTING DRAINAGE STRUCTURES, MANHOLES, VALVES, CLEANOUTS, VAULTS, AND OTHER APPURTENANCES WITHIN THE LIMITS OF GRADING SHALL REMAIN ACCESSIBLE. ADJUST TO FINISHED GRADE ONLY WHERE SPECIFICALLY INDICATED.
6. EXISTING DRAINAGE FACILITIES AND FLOW PATHS SHALL REMAIN FUNCTIONAL EXCEPT WHERE MODIFICATIONS ARE SPECIFICALLY INDICATED ON THE CONTRACT DRAWINGS.
7. EXISTING UNDERGROUND UTILITIES AND STRUCTURES SHOWN WITHIN THE LIMITS OF GRADING ARE BASED ON AVAILABLE SURVEY AND RECORD INFORMATION AND HAVE NOT BEEN FIELD VERIFIED BY SUE WITHIN THE PROJECT WORK AREAS. CONTRACTOR SHALL VERIFY POTENTIAL CONFLICTS PRIOR TO CONSTRUCTION OF THE AFFECTED WORK AND NOTIFY THE ENGINEER OF CONDITIONS THAT DIFFER FROM THOSE SHOWN.
8. PROPOSED DITCH AND SWALE GRADING SHALL MATCH EXISTING FLOWLINES AND GRADES AT THE LIMITS SHOWN. PROVIDE POSITIVE DRAINAGE THROUGH THE PROPOSED DITCH AND SWALE IMPROVEMENTS WITHOUT CREATING UNINTENDED LOW POINTS OR OBSTRUCTIONS TO EXISTING DRAINAGE.
9. FLOODPLAIN/FLOODWAY MITIGATION GRADING SHALL BE CONSTRUCTED TO THE LIMITS AND ELEVATIONS SHOWN. DO NOT PLACE FILL WITHIN DESIGNATED MITIGATION AREAS EXCEPT AS SPECIFICALLY INDICATED.

NOTES BY SYMBOL " ⬡ ":

1. PROPOSED GRAVEL ACCESS ROAD.
2. PROPOSED CONCRETE SIDEWALK.
3. MATCH EXISTING GRADE.
4. EXISTING DRAINAGE STRUCTURE TO REMAIN. PROTECT DURING CONSTRUCTION.
5. ADJUST EXISTING STRUCTURE RIM/COVER TO PROPOSED FINISHED GRADE.
6. PROPOSED DRAINAGE SWALE/DITCH.

NO.	DATE	REVISION	APP.

Jacobs

JACOBS ENGINEERING GROUP INC.
818 TOWN & COUNTRY BLVD
SUITE 500 281-721-8400
TEXAS REGISTRATION NO.: F-2966

MBROH ENGINEERING 20

11757 KATY FWY,
SUITE 625
HOUSTON, TX 77077
713-468-2545

SURVEYED BY:
FB NO.

THESE DOCUMENTS ARE FOR INTERIM REVIEW AND NOT FOR CONSTRUCTION, BIDDING OR PERMIT PURPOSES.
RESPONSIBLE ENGINEER:
JACOBS ENGINEERING GROUP INC
SRI LAKSHMI JASTI, P.E.
TEXAS REGISTRATION NO. F-2966
60% SUBMITTAL

CITY OF HOUSTON
HOUSTON PUBLIC WORKS

WHITE OAKS WWTP IMPROVEMENTS

CIVIL

GRADING AND DRAINAGE DETAIL PLAN
SHEET 1

WBS NUMBER	FOR CITY OF HOUSTON USE ONLY
R-000265-0158-3	
DRAWING SCALE	
1" = 10'	
CITY OF HOUSTON PM	
SHAHIDUR RAHMAN, PE	

C-05

SHEET NO. 13 OF 189

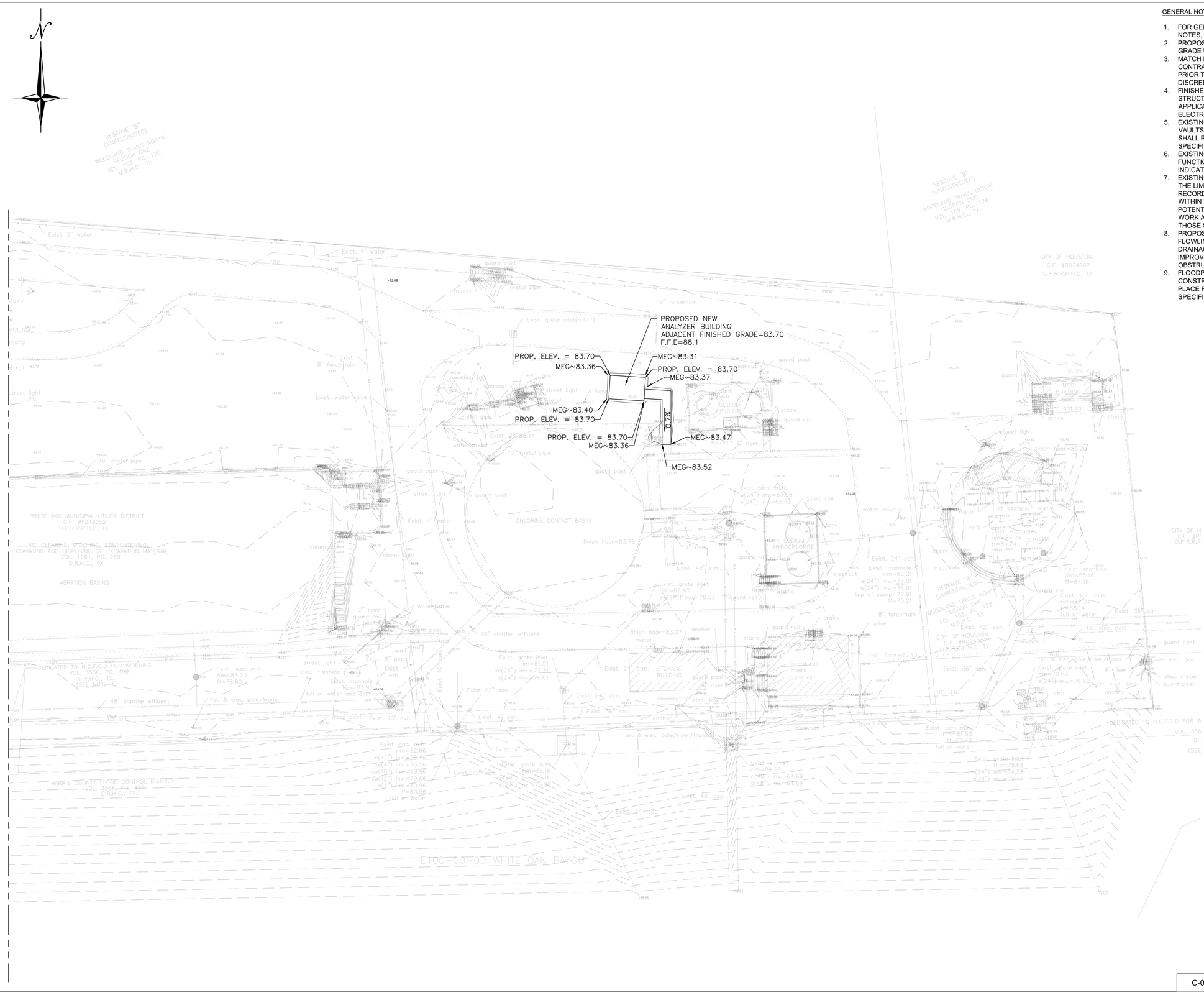
PROPOSED NEW ANALYZER BUILDING ADJACENT FINISHED GRADE=83.70 F.F.E=88.1
PROP. ELEV. = 83.70
MEG~83.36
MEG~83.31
PROP. ELEV. = 83.70
MEG~83.37
MEG~83.40
PROP. ELEV. = 83.70
PROP. ELEV. = 83.70
MEG~83.36
0.7%
MEG~83.47
MEG~83.52
RESERVE "B" (UNRESTRICTED) WOODLAND TRAILS NORTH SECTION ONE VOL. 169, PG. 126 M.R.H.C., TX.
CITY OF HOUSTON C.F. #R024907 O.P.R.R.P.H.C, TX.
WHITE OAK MUNICIPAL UTILITY DISTRICT C.F. #F248052 O.P.R.R.P.H.C, TX.
40' CLEARING, WIDENING, STRAIGHTENING, EXCAVATING AND DISPOSING OF EXCAVATION MATERIAL VOL. 1261, PG. 269 D.R.H.C., TX.
AERATION BASINS
DEDICATED TO H.C.F.C.D. FOR WIDENING VOL. 3566, PG. 499 D.R.H.C., TX. (SEE NOTE 2)
HARRIS COUNTY FLOOD CONTROL DISTRICT VOL. 3566, PG. 499 D.R.H.C., TX.
E100-00-00 WHITE OAK BAYOU
CHLORINE CONTACT BASIN
SODIUM HYPOCHLORITE
LIFT STATION
BUILDING
finish floor=83.78
finish floor=83.07
finish floor=85.10
finish floor=85.27
48" clarifier effluent
Exist. 2" water
Exist. 4" water
Exist. 8" forcemain
Exist. water valve
Exist. 10" metal pipe
Exist. 4" water
Exist. 2" riser
Exist. 48" clarifier effluent
Exist. 8" pvc.
Exist. 8" mtl.
Exist. 10" pvc.
Exist. 12" san.
Exist. 47 san.
Exist. 4" san.
Exist. 12" san.
Exist. 24" cpp.
Exist. 48" cpp.
Exist. 24" stm.
Exist. 36" san.
Exist. 48" stm.
Exist. 24" san.
Exist. 42" san.
Exist. 36" san.
Exist. 24" stm.
Exist. 10" U.E.
Exist. 4" riser
Exist. 24" stm.
Exist. 24" san.
Exist. 36" san.
Exist. 24" stm.
Exist. 24" san.
Exist. 24" stm.
Exist. 24" san.
Exist. 24" stm.
Exist. 24

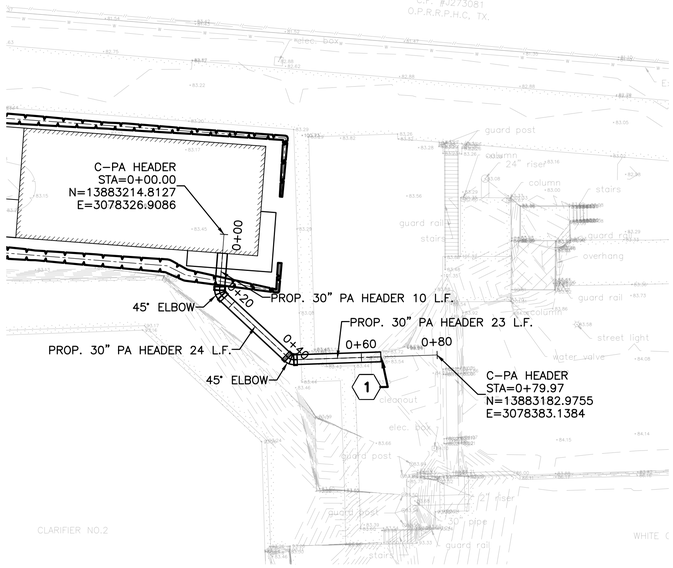

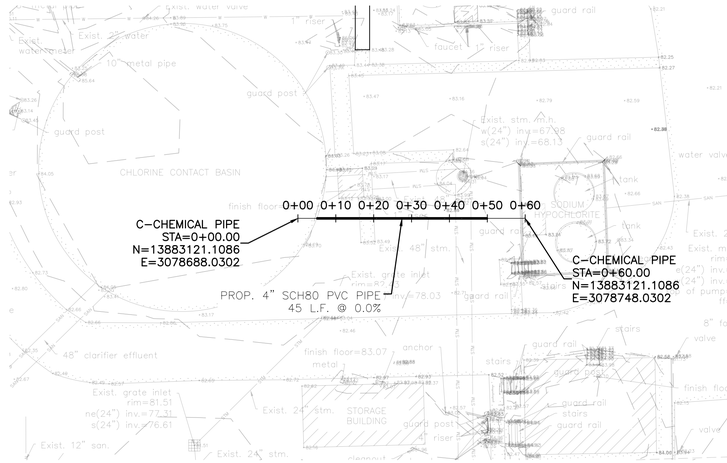

NOTES BY SYMBOL " ⬡ ":

1. CONNECT TO EXISTING BURIED AIR HEADER ON THE NORTH-SOUTH SIDE. THE EXISTING AIR HEADER BURIED DEPTH WAS PREVIOUSLY SHOWN AS APPROX. 6.25-FT. CONTRACTOR SHALL FIELD VERIFY THE EXACT PIPE LOCATION AND ELEVATION PRIOR TO CONSTRUCTION AND ALIGN THE NEW CONNECTION ACCORDINGLY.

NO.	DATE	REVISION	APP.

PA HEADER

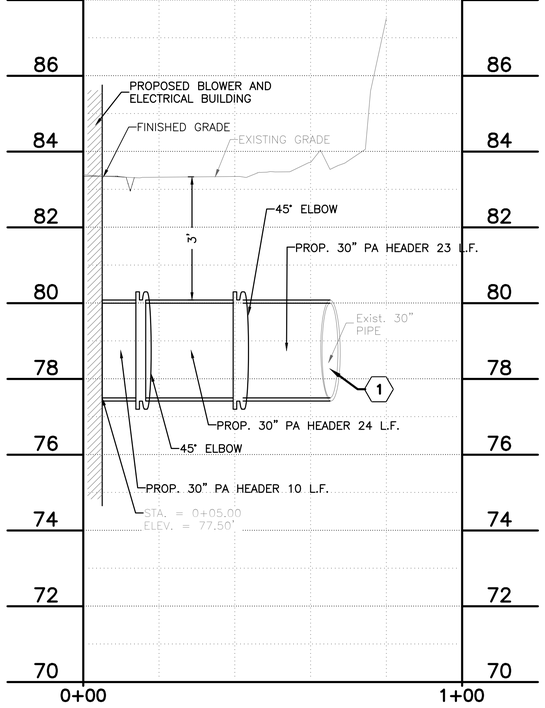

CHEMICAL PIPE

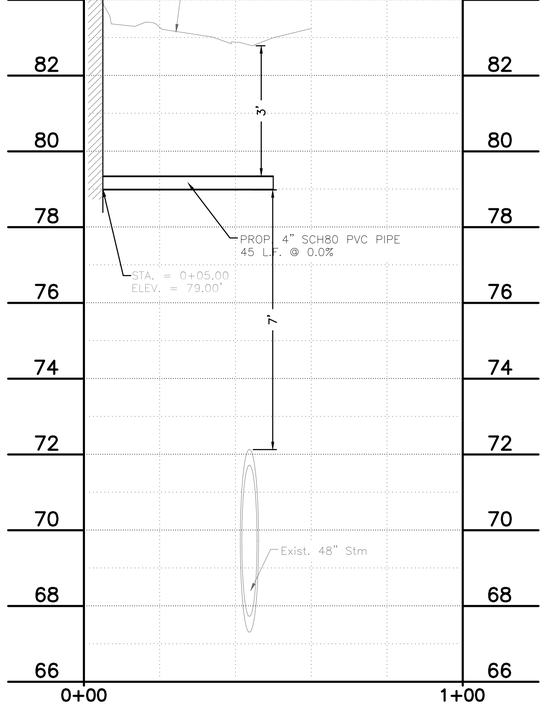

Jacobs
JACOBS ENGINEERING GROUP INC.
818 TOWN & COUNTRY BLVD
SUITE 500 281-721-8400
TEXAS REGISTRATION NO.: F-2966

MBROH ENGINEERING 20
11757 KATY FWY,
SUITE 625
HOUSTON, TX 77077
713-468-2545

SURVEYED BY:
FB NO.

THESE DOCUMENTS ARE FOR INTERIM REVIEW AND NOT FOR CONSTRUCTION, BIDDING OR PERMIT PURPOSES.
RESPONSIBLE ENGINEER:
JACOBS ENGINEERING GROUP INC
SRI LAKSHMI JASTI, P.E.
TEXAS REGISTRATION NO. F-2966
60% SUBMITTAL

CITY OF HOUSTON
HOUSTON PUBLIC WORKS

WHITE OAKS WWTP IMPROVEMENTS

CIVIL

YARD PIPING PLAN AND PROFILE

WBS NUMBER	FOR CITY OF HOUSTON USE ONLY
R-000265-0158-3	
DRAWING SCALE	
HORZ: 1" = 20' VERT: 1" = 2'	
CITY OF HOUSTON PM	
SHAHIDUR RAHMAN, PE	
C-07	SHEET NO. 15 OF 189

FILE PATH: \\ushou8-fil003\houprojects\BIA\BIA01\Mbroh Engineering\D3984701_White Oak WWTP\700CADD\702civil\702.1 PRODUCTION DRAWINGS\8-YARD PIPING PROFILE.dwg PLOT STYLE: Coh_ctb_230809.ctb PLOTTED: 28/10/2026

GENERAL NOTES:

1. EROSION CONTROL TO BORDER DISTURBED AREAS, DIRT PILES, AND ANY POTENTIAL STORM WATER DISCHARGE DURING ALL PERIODS OF CONSTRUCTION.

NO.	DATE	REVISION	APP.

LEGEND

- RFB — REINFORCED FILTER FABRIC BARRIER SEE DETAILS ON SHEET C-10
- CTW — CONCRETE TRUCK WASHOUT AREA SEE DETAILS ON SHEET C-10
- SC-1 — STABILIZED CONSTRUCTION ACCESS SEE DETAILS ON SHEET C-10
- RFD — TYPE 2 FILTER DAM
- FILL SITE
- IPB — INLET PROTECTION SEE DETAILS ON SHEET C-10

MATCH LINE - SEE SHEET C-09 - SWPP PLAN SHEET 2

Jacobs
JACOBS ENGINEERING GROUP INC.
818 TOWN & COUNTRY BLVD
SUITE 500 281-721-8400
TEXAS REGISTRATION NO.: F-2966

MBROH ENGINEERING
11757 KATY FWY,
SUITE 625
HOUSTON, TX 77077
713-468-2545

SURVEYED BY:
FB NO.

THESE DOCUMENTS ARE FOR INTERIM REVIEW AND NOT FOR CONSTRUCTION, BIDDING OR PERMIT PURPOSES.
RESPONSIBLE ENGINEER:
JACOBS ENGINEERING GROUP INC
SRI LAKSHMI JASTI, P.E.
TEXAS REGISTRATION NO. F-2966
60% SUBMITTAL

CITY OF HOUSTON
HOUSTON PUBLIC WORKS

WHITE OAKS WWTP IMPROVEMENTS

CIVIL

SWPP PLAN SHEET 1

WBS NUMBER	FOR CITY OF HOUSTON USE ONLY
R-000265-0158-3	
DRAWING SCALE	
1" = 20'	
CITY OF HOUSTON PM	
SHAHIDUR RAHMAN, PE	

C-08 | SHEET NO. 16 OF 189

FILE PATH: \\ushou8-fil003\houprojects\BIA\BIA01\Mbroh Engineering\D39844701_White Oak WWTP\700CADD\702civil\702.1 PRODUCTION DRAWINGS\9-10-SWPP PLAN SHEET 1-2.dwg PLOT STYLE: Coh_ctb_230809.ctb PLOTTED: 28/10/2026

FILE PATH: \\ushou8-fil003\houprojects\BIA\BIA01\Mbroh Engineering\D39847701_White Oak WWTP\700CADD\702civil\702.1 PRODUCTION DRAWINGS\9-10-SWPP PLAN SHEET 1-2.dwg PLOT STYLE: Coh_ctb_230809.ctb PLOTTED: 28/10/2026

MATCH LINE - SEE SHEET C-08 - SWPP PLAN SHEET 1

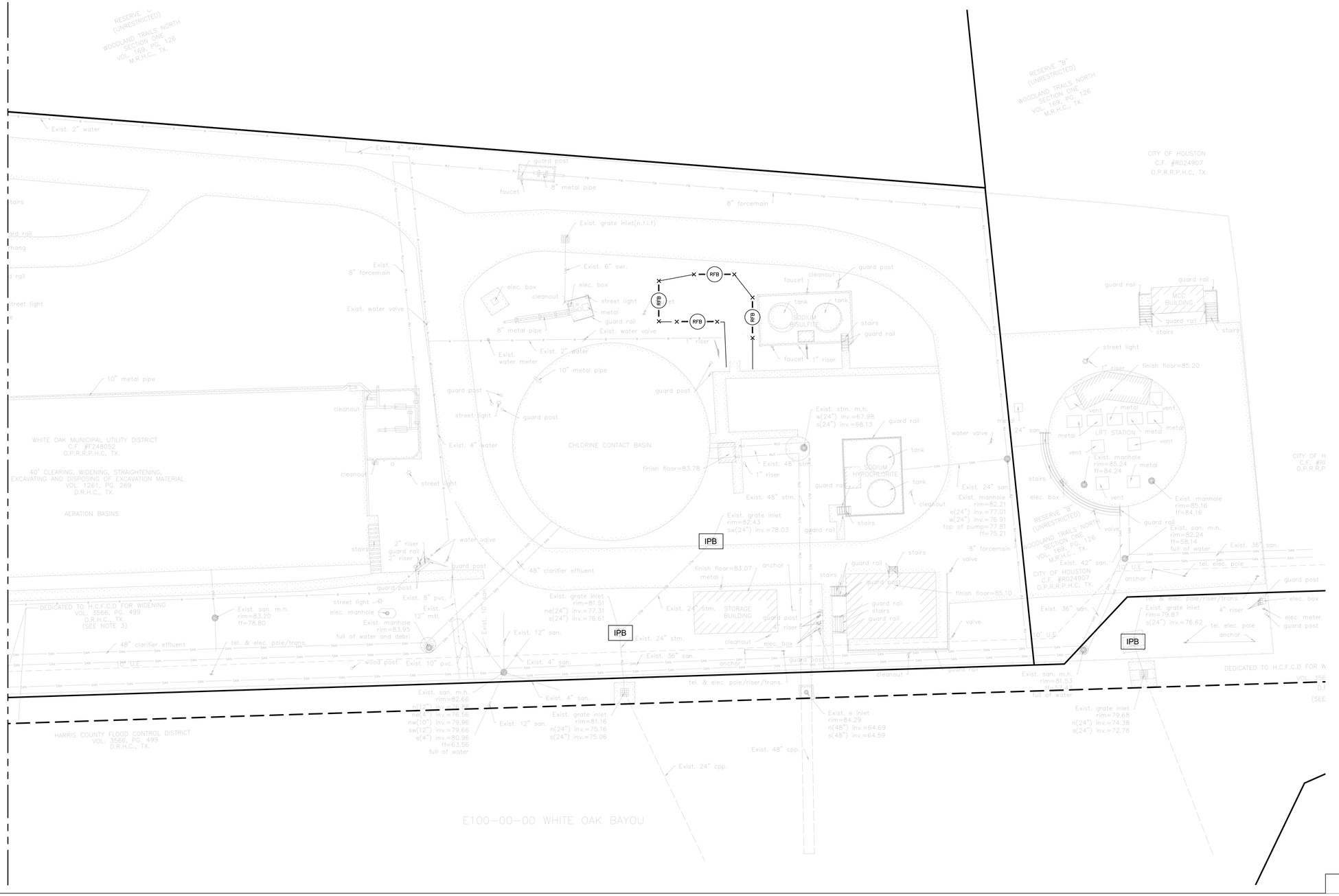

GENERAL NOTES:

1. EROSION CONTROL TO BORDER DISTURBED AREAS, DIRT PILES, AND ANY POTENTIAL STORM WATER DISCHARGE DURING ALL PERIODS OF CONSTRUCTION.

NO.	DATE	REVISION	APP.

LEGEND

- REINFORCED FILTER FABRIC BARRIER SEE DETAILS ON SHEET C-10
- CONCRETE TRUCK WASHOUT AREA SEE DETAILS ON SHEET C-10
- STABILIZED CONSTRUCTION ACCESS SEE DETAILS ON SHEET C-10
- TYPE 2 FILTER DAM
- FILL SITE
- INLET PROTECTION SEE DETAILS ON SHEET C-10

Jacobs
JACOBS ENGINEERING GROUP INC.
818 TOWN & COUNTRY BLVD
SUITE 500 281-721-8400
TEXAS REGISTRATION NO.: F-2966

MBROH ENGINEERING
11757 KATY FWY,
SUITE 625
HOUSTON, TX 77077
713-468-2545

SURVEYED BY:
FB NO.

THESE DOCUMENTS ARE FOR INTERIM REVIEW AND NOT FOR CONSTRUCTION, BIDDING OR PERMIT PURPOSES.
RESPONSIBLE ENGINEER:
JACOBS ENGINEERING GROUP INC
SRI LAKSHMI JASTI, P.E.
TEXAS REGISTRATION NO. F-2966
60% SUBMITTAL

CITY OF HOUSTON
HOUSTON PUBLIC WORKS

WHITE OAKS WWTP IMPROVEMENTS

CIVIL

SWPP PLAN SHEET 2

WBS NUMBER	FOR CITY OF HOUSTON USE ONLY
R-000265-0158-3	
DRAWING SCALE	
1" = 20'	
CITY OF HOUSTON PM	
SHAHIDUR RAHMAN, PE	

C-09

SHEET NO. 17 OF 189

FILE PATH: \\ushou8-fil003\houprojects\BIA\BIA01\Mbroh Engineering\D3984701_White Oak WWTP\700CADD\702civil\702.1 PRODUCTION DRAWINGS\11-SWPP DETAILS.dwg
PLOT STYLE: Coh_ctb_230809.ctb
PLOTTED: 28/10/2026

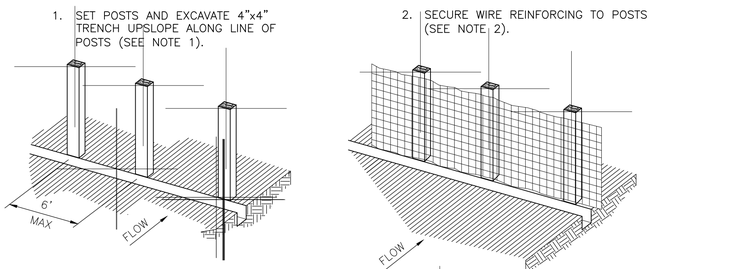

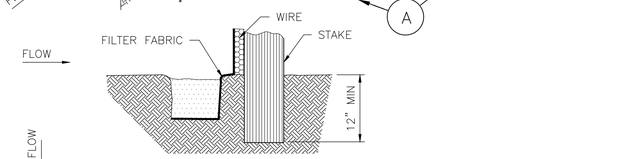

SECTION A–A

EXTENSION OF FABRIC INTO TRENCH

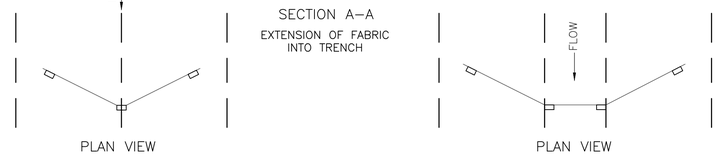

PLAN VIEW

PLAN VIEW

POINTS A SHOULD BE HIGHER THAN POINT B, OR AT TOP OF BANK (TYP)

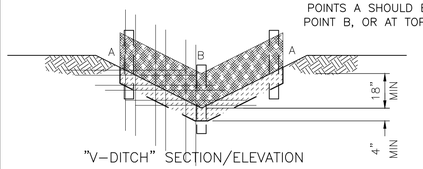

"V–DITCH" SECTION/ELEVATION

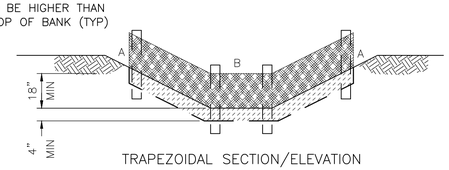

TRAPEZOIDAL SECTION/ELEVATION

CONSTRUCTION NOTES:

1. SET 2 INCH BY 2 INCH WOODEN STAKES SPACED A MAX OF 6 FEET APART AND EMBEDDED A MIN OF 12 INCHES.
2. WOVEN WIRE REINFORCING TO BE FASTENED SECURELY TO BARRIER POSTS WITH STAPLES.
3. FILTER CLOTH TO BE FASTENED SECURELY TO WOVEN WIRE REINFORCING, WITH TIES SPACED EVERY 24 INCHES AT TOP AND MIDSECTION.
4. MINIMUM HEIGHT OF FILTER SHOULD BE 18 INCHES AND A MAXIMUM OF 36 INCHES ABOVE NATURAL GROUND.
5. WHEN TWO SECTIONS OF FILTER CLOTH ADJOIN EACH OTHER THEY SHALL BE OVERLAPPED 6 INCHES AT THE POSTS, AND FOLDED.
6. SEE COH STANDARD SPECIFICATION 01570 FOR FILTER FABRIC BARRIER.

RFB

SYMBOL

REINFORCED FILTER FABRIC BARRIER

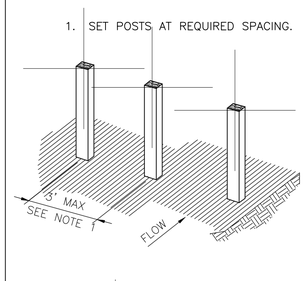

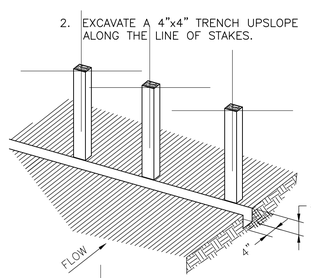

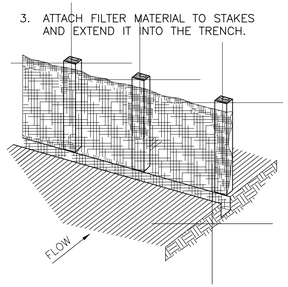

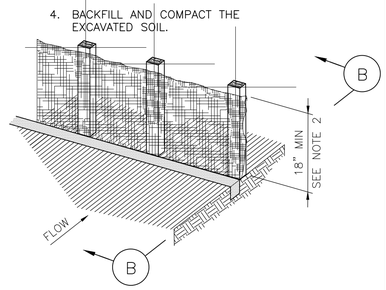

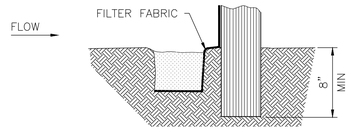

SECTION B–B

EXTENSION OF FABRIC INTO TRENCH

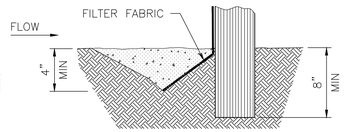

SECTION B–B

ALTERNATE

V–TRENCH EXTENSION OF FABRIC INTO TRENCH

CONSTRUCTION NOTES:

1. 2 INCH THICK BY 2 INCH WOODEN STAKES TO BE SET AT MAX SPACING OF 3 FEET AND EMBEDDED A MIN OF 8 INCHES. IF PREASSEMBLED BARRIER WITH SUPPORT NETTING IS USED, SPACING OF POST MAY BE INCREASED TO 8 FEET MAX.
2. ATTACH FILTER FABRIC TO WOODEN STAKES. FILTER FABRIC BARRIER SHALL HAVE A MIN HEIGHT OF 18 INCHES AND MAX HEIGHT OF 36 INCHES ABOVE NATURAL GROUND.
3. WHEN TWO SECTIONS OF FILTER CLOTH ADJOIN EACH OTHER THEY SHOULD BE OVERLAPPED 6 INCHES AT THE POSTS, AND FOLDED.
4. SEE COH STANDARD SPECIFICATION 01570 FOR FILTER FABRIC BARRIER.

FF

SYMBOL

FILTER FABRIC BARRIER

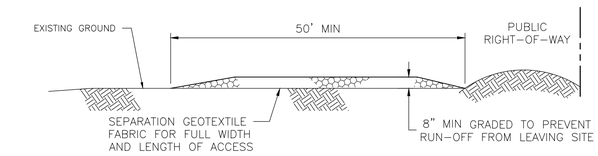

PROFILE

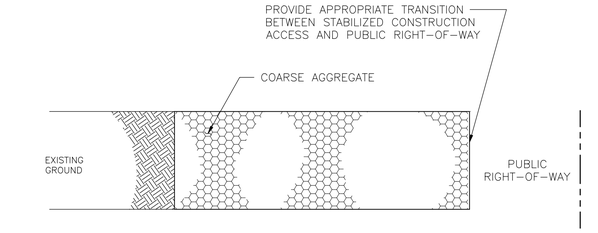

PLAN VIEW

CONSTRUCTION NOTES:

1. LENGTH SHALL BE AS SHOWN ON THE CONSTRUCTION DRAWINGS, BUT NOT LESS THAN 50 FEET.
2. THICKNESS SHALL BE NOT LESS THAN 8 INCHES.
3. WIDTH SHALL BE NOT LESS THAN FULL WIDTH OF ALL POINTS OF INGRESS OR EGRESS.
4. STABILIZATION FOR OTHER AREAS SHALL HAVE THE SAME AGGREGATE THICKNESS AND WIDTH REQUIREMENTS AS THE STABILIZED CONSTRUCTION ACCESS, UNLESS OTHERWISE SHOWN ON THE CONSTRUCTION DRAWINGS.
5. STABILIZED AREA MAY BE WIDENED OR LENGTHENED TO ACCOMODATE A WASHING AREA. AN OUTLET SEDIMENT TRAP MUST BE PROVIDED FOR THE WASHING AREA.
6. COH STANDARD SPECIFICATION 01575 FOR STABILIZED CONSTRUCTION ACCESS.
7. STABILIZED CONSTRUCTION ACCESS SHALL BE MAINTAINED FREE OF SEDIMENT FOR THE DURATION OF THE PROJECT.

SC

SYMBOL

STABILIZED CONSTRUCTION ACCESS

CONSTRUCTION NOTES:

1. SEE CONSTRUCTION NOTES FOR RFB.

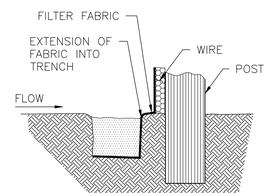

SECTION D–D

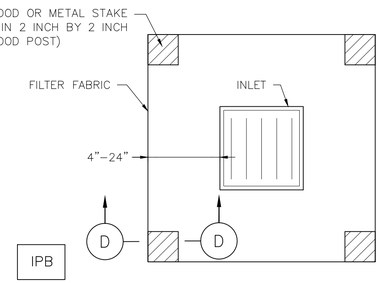

IPB

SYMBOL

PLAN VIEW

SILT FENCE INLET PROTECTION BARRIER

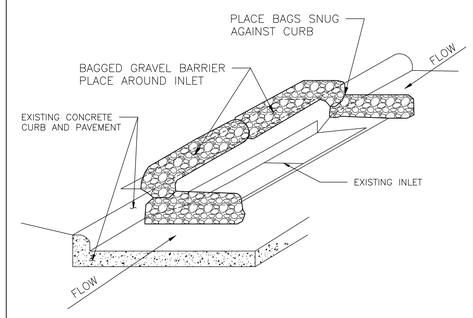

INLET PROTECTION BARRIER

(FOR STAGE II INLETS)
BAGGED GRAVEL BARRIER

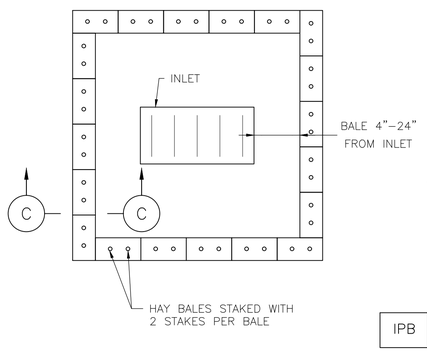

PLAN VIEW

IPB

SYMBOL

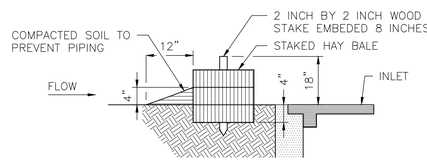

SECTION C–C

HAY BALE INLET PROTECTION BARRIER

NO.	DATE	REVISION	APP.

Jacobs
JACOBS ENGINEERING GROUP INC.
818 TOWN & COUNTRY BLVD
SUITE 500 281–721–8400
TEXAS REGISTRATION NO.: F–2966

MBROH ENGINEERING 20
11757 KATY FWY,
SUITE 625
HOUSTON, TX 77077
713-468-2545

SURVEYED BY:
FB NO.

THESE DOCUMENTS ARE FOR INTERIM REVIEW AND NOT FOR CONSTRUCTION, BIDDING OR PERMIT PURPOSES.
RESPONSIBLE ENGINEER:
JACOBS ENGINEERING GROUP INC
SRI LAKSHMI JASTI, P.E.
TEXAS REGISTRATION NO. F–2966
60% SUBMITTAL

CITY OF HOUSTON
HOUSTON PUBLIC WORKS

WHITE OAKS WWTP IMPROVEMENTS

CIVIL

SWPP DETAILS

WBS NUMBER	FOR CITY OF HOUSTON USE ONLY
R-000265-0158-3	
DRAWING SCALE	
NOT TO SCALE	
CITY OF HOUSTON PM	
SHAHIDUR RAHMAN, PE	
SHEET NO. 18 OF 189	

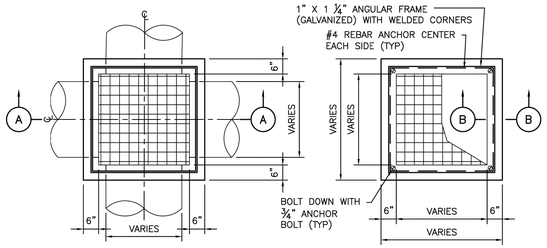

PLAN VIEW

PLAN VIEW

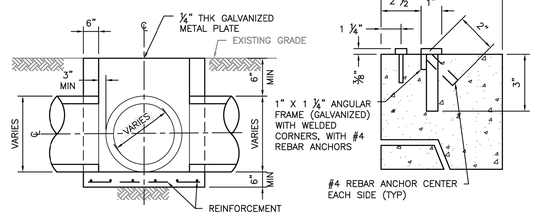

SECTION A–A
JUNCTION BOX DETAIL

SECTION B–B
LID FRAME DETAIL

NOTES:

1. DETAIL TO BE USED WHERE STORM SEWER SIZE IS 24" DIA OR LESS.
2. FOR SEWER GREATER THAN 24" DIA USE TYPE C MANHOLE.

NOTES TO SPECIFIER:

1. WALL TO BE 6" CONCRETE.
2. NOT TO BE USED IN STREET. FOR AREA BETWEEN CURB AND PROPERTY LINE ONLY.

DISCLAIMER: THE USE OF THIS STANDARD IS GOVERNED BY THE TEXAS ENGINEERING PRACTICE ACT. THE DESIGN REQUIREMENTS ON THIS STANDARD DO NOT PURPORT TO ADDRESS ALL OF THE SAFETY CONCERNS ASSOCIATED WITH THEIR USE. THE ENGINEER OF RECORD (EOR) IS TO REVIEW THESE DESIGN REQUIREMENTS AND BY AUTHORIZING THEIR USE, ACCEPTS RESPONSIBILITY FOR THEIR APPLICABILITY, ADEQUACY AND SAFETY. NO WARRANTY OF ANY KIND IS MADE BY THE CITY OF HOUSTON FOR ANY PURPOSES WHATSOEVER. THE CITY OF HOUSTON ASSUMES NO RESPONSIBILITY FOR INCORRECT RESULTS OR DAMAGES RESULTING FROM ITS USE.

APPROVED BY:

CITY ENGINEER	DIRECTOR OF HPW

CITY OF HOUSTON
HOUSTON PUBLIC WORKS STANDARD

STORM SEWER JUNCTION BOX WITH LID OR GRATE TOP FOR MAXIMUM OF 24" DIA STORM SEWER

(SCALE: NOT TO SCALE)

EFF DATE: MAR–02–2026 | DWG NO: 02081–06

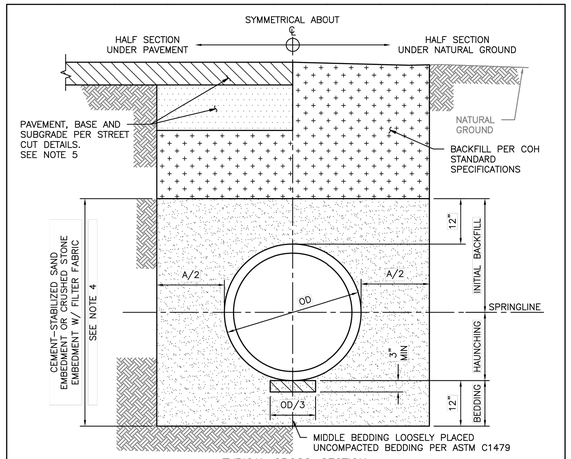

TYPICAL CROSS–SECTION

NOTES:

1. THIS DETAIL MAY BE USED ONLY FOR DRY STABLE TRENCH CONDITIONS PER COH STANDARD. SEE COH STANDARD SPECIFICATION FOR REQUIREMENTS IN OTHER CONDITIONS.
2. MIN TRENCH WIDTH SHALL BE PIPE OD PLUS AN ALLOWANCE "A" FOR THE NOMINAL PIPE SIZE:

NOMINAL PIPE SIZE	"A"
30" OR LESS	24"
36" TO 42"	36"
GREATER THAN 42"	48"

3. MAX TRENCH WIDTH SHALL BE NOT GREATER THAN MIN TRENCH WIDTH PLUS 24 INCHES, UNLESS OTHERWISE NOTED.
4. ALTERNATIVE EMBEDMENT BACKFILL MATERIALS FOR FORCE MAINS MAY BE ALLOWED. SEE COH STANDARD SPECIFICATIONS.
5. REFER TO THE COH STD DETAILS 02951–01 THROUGH 05 FOR STREET CUT REQUIREMENTS.
6. FOR THERMOPLASTIC STORM SEWER PIPE INSTALLATION REFER TO COH STD DETAIL 02317–10G.

DISCLAIMER: THE USE OF THIS STANDARD IS GOVERNED BY THE TEXAS ENGINEERING PRACTICE ACT. THE DESIGN REQUIREMENTS ON THIS STANDARD DO NOT PURPORT TO ADDRESS ALL OF THE SAFETY CONCERNS ASSOCIATED WITH THEIR USE. THE ENGINEER OF RECORD (EOR) IS TO REVIEW THESE DESIGN REQUIREMENTS AND BY AUTHORIZING THEIR USE, ACCEPTS RESPONSIBILITY FOR THEIR APPLICABILITY, ADEQUACY AND SAFETY. NO WARRANTY OF ANY KIND IS MADE BY THE CITY OF HOUSTON FOR ANY PURPOSES WHATSOEVER. THE CITY OF HOUSTON ASSUMES NO RESPONSIBILITY FOR INCORRECT RESULTS OR DAMAGES RESULTING FROM ITS USE.

APPROVED BY:

CITY ENGINEER	DIRECTOR OF HPW

CITY OF HOUSTON
HOUSTON PUBLIC WORKS STANDARD

SANITARY OR STORM SEWER BEDDING AND BACKFILL FOR DRY STABLE TRENCH

(SCALE: NOT TO SCALE)

EFF DATE: MAR–02–2026 | DWG NO: 02317–03

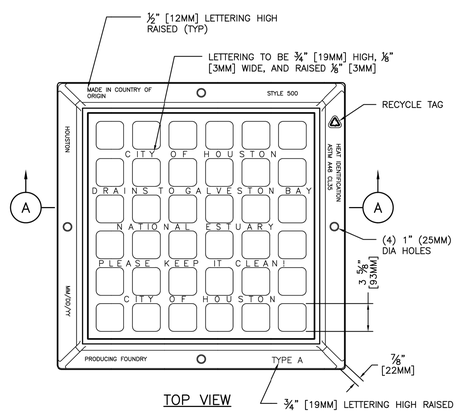

TOP VIEW

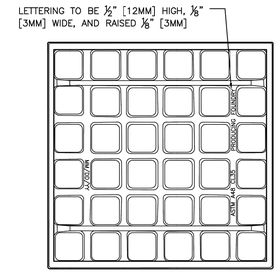

BOTTOM VIEW OF GRATE

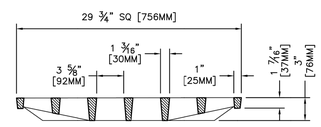

GRATE SECTION

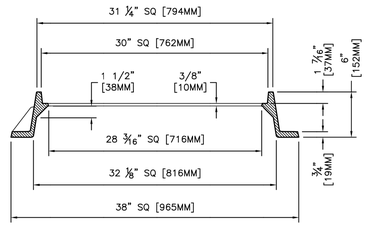

FRAME SECTION

SECTION A–A

NOTES:

1. APPROXIMATE WEIGHTS:
   GRATE – 190 LBS (86KG)
   FRAME – 235 LBS (107KG)
   UNIT – 425 LBS (193KG)
2. MATERIAL– GRAY IRON ASTM A48 CL35B.
3. CASTING MUST BE MANUFACTURED AND PROOF TESTED IN ACCORDANCE WITH AASHTO M306.
4. EJ V4880 ASY OR APPROVED EQUAL.
5. OPEN AREA OF GRATE 473 SQ. IN. [3051 SQ.CM.].
6. IDENTIFICATION MARKINGS MUST COMPLY WITH CITY SPECIFICATIONS. MARKINGS NOT SHOWN ON THIS DETAIL MUST BE PLACED ON THE CASTING:
   A. PROVIDE ALL FRAME MARKINGS ON THE TOP SIDE OF THE FRAME.
   B. PROVIDE GRATE AND COVER MARKINGS ON EITHER TOP OR BOTTOM OF CASTING.

CITY OF HOUSTON
HOUSTON PUBLIC WORKS STANDARD

STORM SEWER TYPE "A" INLET GRATE AND FRAME

(SCALE: NOT TO SCALE)

APPROVED BY:

CITY ENGINEER	DIRECTOR OF HPW

EFF DATE: MAR–02–2026 | DWG NO: 02090–07

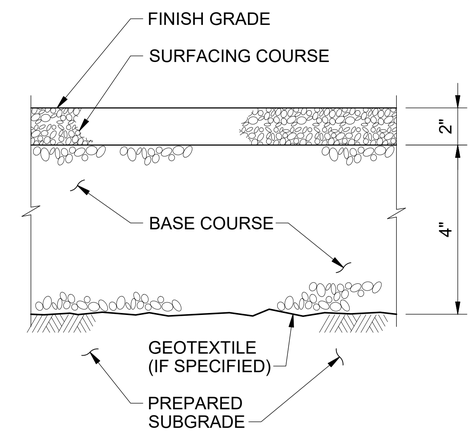

GRAVEL SURFACING
NTS

NO.	DATE	REVISION	APP.

Jacobs
JACOBS ENGINEERING GROUP INC.
818 TOWN & COUNTRY BLVD
SUITE 500 281–721–8400
TEXAS REGISTRATION NO.: F–2966

MBROH 20 ENGINEERING
11757 KATY FWY,
SUITE 625
HOUSTON, TX 77077
713-468-2545

SURVEYED BY:
FB NO.

THESE DOCUMENTS ARE FOR INTERIM REVIEW AND NOT FOR CONSTRUCTION, BIDDING OR PERMIT PURPOSES.
RESPONSIBLE ENGINEER:
JACOBS ENGINEERING GROUP INC
SRI LAKSHMI JASTI, P.E.
TEXAS REGISTRATION NO. F–2966
60% SUBMITTAL

CITY OF HOUSTON
HOUSTON PUBLIC WORKS

WHITE OAKS WWTP IMPROVEMENTS

CIVIL

DETAILS

WBS NUMBER	FOR CITY OF HOUSTON USE ONLY
R-000265-0158-3	
DRAWING SCALE	
NOT TO SCALE	
CITY OF HOUSTON PM	
SHAHIDUR RAHMAN, PE	

C-11 | SHEET NO. 19 OF 189

FILE PATH: \\ushou8-fil003\houprojects\BIA\BIA01\Mbroh Engineering\D3984701_White Oak WWTP\700CADD\702civil\702.1 PRODUCTION DRAWINGS\12-CIVIL DETAILS.dwg PLOT STYLE: Coh_ctb_230809.ctb PLOTTED: 28/10/2026

PIPE AND FITTING SYMBOLS

DOUBLE LINE	SINGLE LINE	
		EXISTING PIPE
		NEW PIPE
		EXISTING PIPE TO BE ABANDONED
		EXISTING PIPE TO BE REMOVED
		WELDED JOINT
		GROOVED END JOINT
		FLANGED JOINT
		MECHANICAL JOINT & PROPRIETARY RESTRAINED JOINT
		BELL & SPIGOT JOINT (LEADED)
		HUB & SPIGOT JOINT (RUBBER GASKET)
		BALL JOINT
		ADAPTER SIDE GROOVED END ADAPTER FLANGE
		FLANGED COUPLING ADAPTER
		FLEXIBLE COUPLING
		METAL BELLOWS EXP JOINT
		ELASTOMER BELLOWS EXP JOINT
		ELBOW UP
		ELBOW DOWN
		TEE UP
		TEE DOWN
		LATERAL UP
		LATERAL DOWN
		CONCENTRIC REDUCER
		ECCENTRIC REDUCER

DOUBLE LINE	SINGLE LINE	
		REDUCING BUSHING
		UNION
		CAP
		ANCHOR
		ELBOW, 90 DEGREE
		CROSS
		TEE
		ELBOW, 45 DEGREE
		LATERAL

NOTES:

1. ONLY FLANGED END CONNECTIONS ARE SHOWN HERE FOR DOUBLE LINE FITTINGS. FITTINGS WITH OTHER END PATTERNS ARE SHOWN SIMILARLY ON THE CONSTRUCTION DRAWINGS. ALSO SEE PIPING SPECIFICATIONS.
2. SYMBOLS SHOWN HERE FOR SINGLE LINE FITTINGS ARE GENERIC ONLY. REFER TO PIPING SPECIFICATIONS FOR SPECIFIC END CONNECTIONS FOR SINGLE LINE PIPE AND FITTINGS.
3. EXISTING PIPE AND EQUIPMENT IS SHOWN LIGHT-LINED AND/OR SCREENED AND IS NOTED AS EXISTING. NEW PIPING AND EQUIPMENT IS SHOWN HEAVY-LINED.

PIPING DESIGNATION

EXAMPLE:

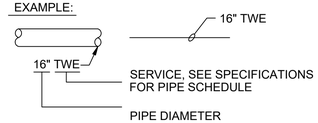

ACTUATOR SYMBOLS

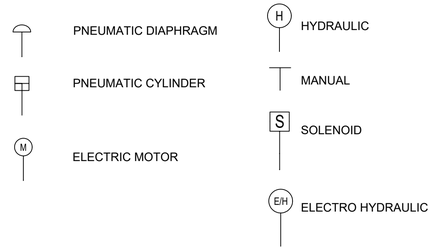

VALVE SYMBOLS

SINGLE LINE	DOUBLE LINE
GATE	
KNIFE GATE	OR
BUTTERFLY	OR
GLOBE	OR
BALL	OR
SEATING PORT	
ECCENTRIC PLUG	OR
PLUG OR COCK	OR
NEEDLE	OR
DIAPHRAGM	OR
PINCH	OR
SWING CHECK	OR
BALL CHECK	OR
HOSE VALVE (HV- X) OR (V-X) X = NO. IN SPECS	
SAMPLE	
MUD	
PRESSURE RELIEF	
AIR AND/OR VACUUM RELEASE	
REGULATED SIDE	
PRESSURE CONTROL (INTERNAL PILOT)	
REGULATED SIDE	
PRESSURE CONTROL (EXTERNAL PILOT)	
MULTI-PORT VALVE, ARROWS INDICATE FLOW PATTERN. SEATING PORTS ARE IMPLIED BY INDICATED FLOW PATTERN.	
TELESCOPING SCUM VALVE	

VALVE DESIGNATIONS

MANUAL VALVES AND CHECK VALVES

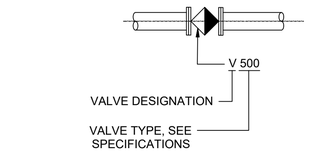

CONTROL VALVES

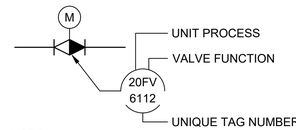

NOTE:
SEE I&C LEGENDS FOR FURTHER DEFINITIONS AND ACTUATOR TYPES.

SELF-CONTAINED REGULATING VALVES

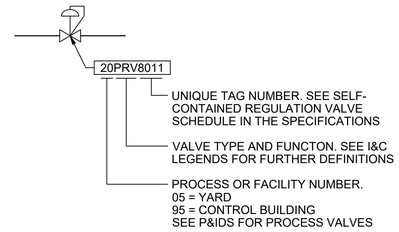

MECHANICAL LEGEND AND NOTES

TO BE DEMOLISHED

GENERIC PIPING NOTES

1. LAY PIPE TO UNIFORM GRADE BETWEEN INDICATED ELEVATION POINTS.
2. SIZE OF FITTINGS SHOWN ON DRAWINGS SHALL CORRESPOND TO ADJACENT STRAIGHT RUN OF PIPE, UNLESS OTHERWISE INDICATED. TYPE OF JOINT AND FITTING MATERIAL SHALL BE THE SAME AS SHOWN FOR ADJACENT STRAIGHT RUN OF PIPE.
3. LOCATION AND NUMBER OF PIPE HANGERS AND PIPE SUPPORTS SHOWN IS ONLY APPROXIMATE. CONTRACTOR SHALL DESIGN SUPPORTS AS SPECIFIED.
4. ALL JOINTS SHALL BE WATERTIGHT. WALL PIPES SHALL BE USED WHEREVER PIPING PASSES FROM A STRUCTURE TO BACKFILL.
5. ALL FLEXIBLE CONNECTORS AND COUPLING ADAPTERS SHALL BE PROVIDED WITH THRUST PROTECTION AS SPECIFIED, UNLESS OTHERWISE NOTED. THRUST PROTECTION SHALL BE ADEQUATE FOR TEST PRESSURES SPECIFIED.
6. SYMBOLS, LEGENDS, AND PIPE USE IDENTIFICATIONS SHOWN SHALL BE FOLLOWED THROUGHOUT THE DRAWINGS, WHEREVER APPLICABLE. NOT ALL OF THE VARIOUS PIPING COMPONENTS ARE NECESSARILY USED IN THE PROJECT.
7. ALL BURIED PIPING SPECIFIED TO BE PRESSURE TESTED, EXCEPT FLANGED, WELDED, OR SCREWED PIPING, SHALL BE PROVIDED WITH THRUST PROTECTION AS SPECIFIED, UNLESS OTHERWISE NOTED.
8. NUMBER AND LOCATION OF UNIONS SHOWN ON DRAWINGS IS ONLY APPROXIMATE. PROVIDE ALL UNIONS NECESSARY TO FACILITATE CONVENIENT REMOVAL OF VALVES AND MECHANICAL EQUIPMENT.
9. WHERE A GROOVED END COUPLING IS SHOWN, IT SHALL BE THE RIGID JOINT TYPE, UNLESS OTHERWISE SPECIFIED. WHERE A FLANGED COUPLING ADAPTER IS SHOWN, A STANDARD FLANGE SHALL BE JOINED TO THE COUPLING ADAPTER.

NO.	DATE	REVISION	APP

Jacobs
JACOBS ENGINEERING GROUP INC.
818 TOWN & COUNTRY BLVD
SUITE 500 281-721-8400
TEXAS REGISTRATION NO.: F-2966

MBROH 20 ENGINEERING
11757 KATY FWY,
SUITE 625
HOUSTON, TX 77077
713-468-2545

THESE DOCUMENTS ARE FOR INTERIM REVIEW AND NOT FOR CONSTRUCTION, BIDDING OR PERMIT PURPOSES.
RESPONSIBLE ENGINEER:
JACOBS ENGINEERING GROUP INC
SUJING GUO, P.E.
TEXAS REGISTRATION NO. F-2966
60% SUBMITTAL

SURVEYED BY:
FB NO.

CITY OF HOUSTON
HOUSTON PUBLIC WORKS

WHITE OAKS
WWTP IMPROVEMENTS
PROCESS MECHANICAL

LEGEND

WBS NUMBER	FOR CITY OF HOUSTON USE ONLY
R-000265-0158-3	
DRAWING SCALE	
NONE	
CITY OF HOUSTON PM	
SHAHIDUR RAHMAN, PE	

M-01

SHEET NO. 20 OF 189

FILE PATH: C:\Users\mccoski\OneDrive - Jacobs\Documents\Project Work\White Oak WWTP\White Oak Design\Drawing\2026 60% Design\Design\PRODUCTION DRAWINGS\01-Process Legend.dwg PLOT STYLE: Coh_ctb_230809.ctb PLOTTED: 03/11/2026

FILE PATH: C:\Users\vmccoski\OneDrive – Jacobs\Documents\Project Work\White Oak WWTP\White Oak Design\Drawing\2026 60% Design\Design\PRODUCTION DRAWINGS\02-Overall Process Mechanical\M-02_Overall Plan_230809.ctb PLOTTED: 03/11/2026

SUMMARY OF PROCESS MECHANICAL SCOPE OF WORK

(100) CLARIFIER
101 - REPLACE CLARIFIER MECHANISM MOTOR
102 - REPLACE CURRENT STOPLOG WITH SLIDE GATE
103 - REPLACE CLARIFIER DRAIN VALVES AND ASSOCIATED VALVE BOXES (SEE DRAWING M-14 FOR DETAILS)
104 - LEAK TEST AIR PIPE AND REPAIR AS NEEDED
105 - PAINT EXPOSED PIPES (SEE DRAWING M-14 FOR DETAILS)

(200) AERATION BASIN
201 - REPLACE AIR VALVES FOR AIR LIFT PUMPS (SEE DRAWING M-14 FOR DETAILS)
202 - PAINT EXPOSED PIPES (SEE DRAWINGS M-06 TO M-08 FOR DETAILS)
203 - REPLACE SPLASH BOARD

(300) BLOWER BUILDING
301 - DEMOLISH EXISTING BLOWER BUILDING
302 - INSTALL NEW BLOWERS AND ASSOCIATED VALVES, PIPING, BRIDGE CRANE, ETC.

(400) WAS PUMP STATION
401 - REPLACE PUMPS, VALVES AND PIPING
402 - INSTALL FLOW METER
403 - INSTALL TSS SENSOR

(500) SODIUM HYPOCHLORITE SYSTEM
501 - REPLACE CHEMICAL PIPING FROM TANK CONTAINMENT AREA TO CHLORINE CONTACT BASIN

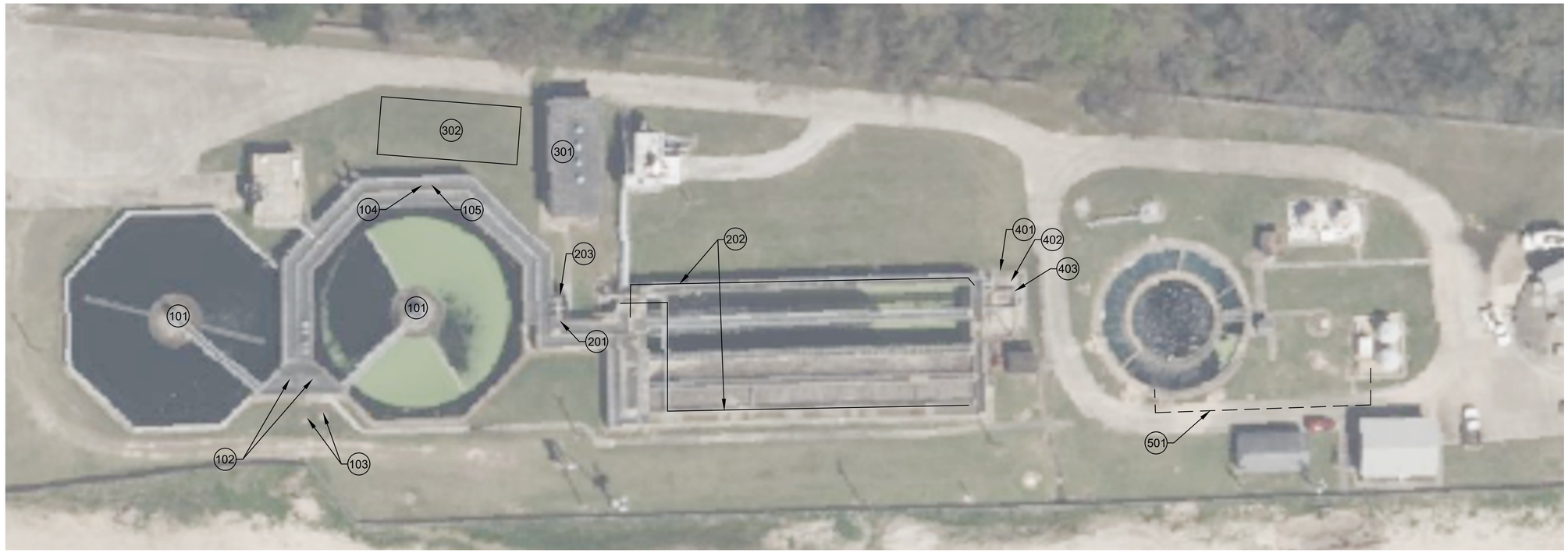

NO.	DATE	REVISION	APP.

Jacobs
JACOBS ENGINEERING GROUP INC.
818 TOWN & COUNTRY BLVD
SUITE 500 281-721-8400
TEXAS REGISTRATION NO.: F-2966

MBROH ENGINEERING
11757 KATY FWY,
SUITE 625
HOUSTON, TX 77077
713-468-2545

SURVEYED BY:
FB NO.

THESE DOCUMENTS ARE FOR INTERIM REVIEW AND NOT FOR CONSTRUCTION, BIDDING OR PERMIT PURPOSES.
RESPONSIBLE ENGINEER:
JACOBS ENGINEERING GROUP INC
SUJING GUO, P.E.
TEXAS REGISTRATION NO. F-2966
60% SUBMITTAL

CITY OF HOUSTON
HOUSTON PUBLIC WORKS

WHITE OAKS WWTP IMPROVEMENTS

PROCESS MECHANICAL

OVERALL PLAN

WBS NUMBER	FOR CITY OF HOUSTON USE ONLY
R-000265-0158-3	
DRAWING SCALE	
NONE	
CITY OF HOUSTON PM	
SHAHIDUR RAHMAN, PE	

M-02 SHEET NO. 21 OF 189

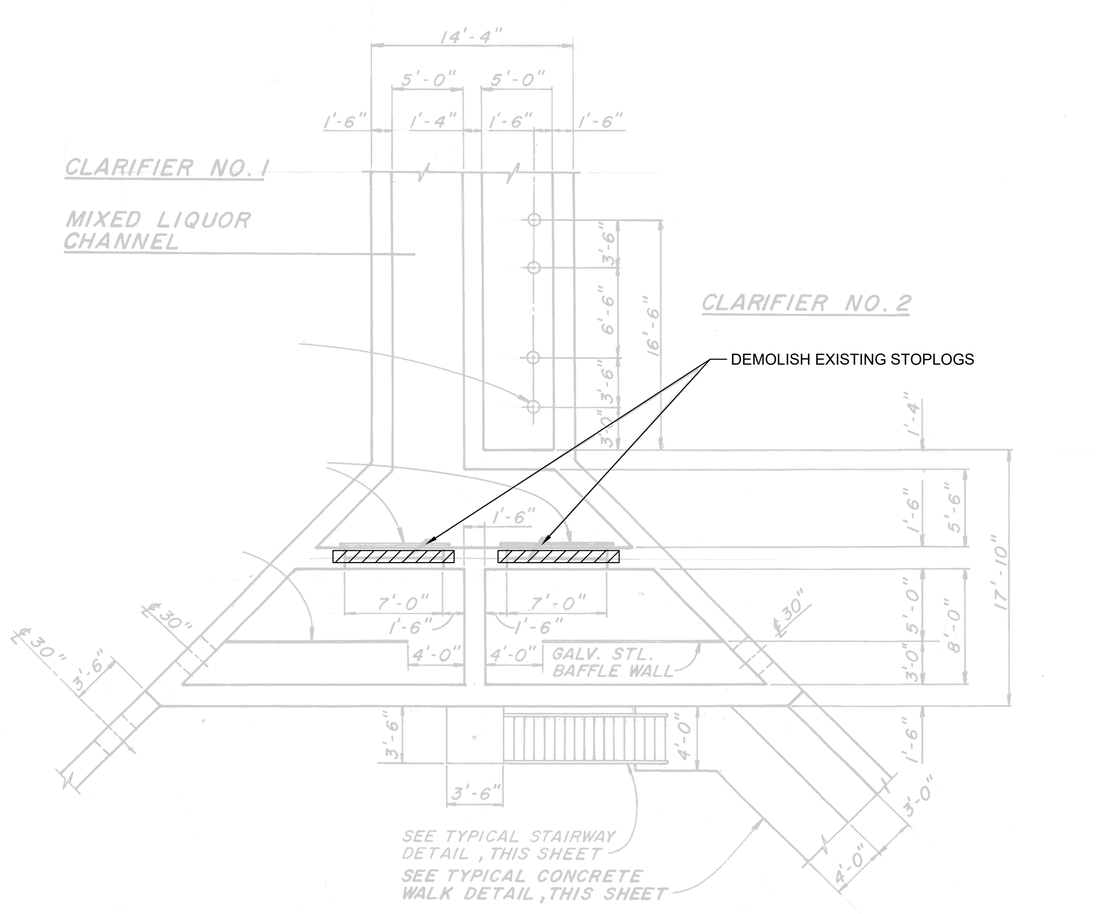

PLAN
NTS

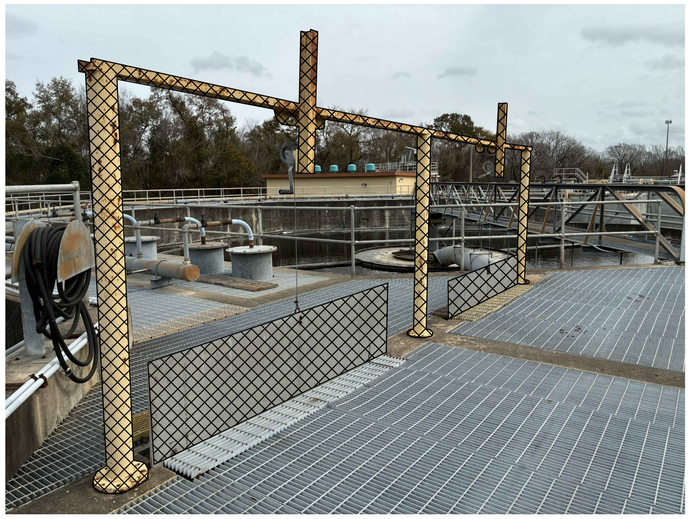

PHOTOGRAPH 1
-

GENERAL DEMOLITION NOTES:

1. THE CITY SHALL HAVE THE FIRST RIGHT OF REFUSAL TO RETAIN OR SALVAGE ALL ITEMS SHOWN TO BE DEMOLISHED ANO/OR REMOVED, INCLUDED BUT NOT LIMITED TO, PUMPS, HATCHES AND ELECTRICAL AND INSTRUMENTATION COMPONENTS. PRIOR TO INITIATING DEMOLITION WORK, THE CONTRACTOR AND CITY ENGINEER SHALL MAKE A JOINT INSPECTION OF EACH SITE TO IDENTIFY ALL EQUIPMENT TO BE RETAINED BY THE CITY FOR SALVAGE OR REUSE. ITEMS IDENTIFIED FOR SALVAGE BY THE CITY SHALL BE CAREFULLY REMOVED TO PROTECT FROM DAMAGE. ALL OTHER ITEMS SHOWN TO BE DEMOLISHED/REMOVED THAT ARE NOT RETAINED BY THE CITY SHALL BE PROPERLY REMOVED FROM THE SITE AND HANDLED PER SECTION 02220 FACILITIES DEMOLITION AT NO ADDITIONAL COST TO THE CITY. CONTACT RICHARD BELLINGER AT 832-395-3535 AND TOMAS MARTINEZ AT 832-395-5146 (OFFICE) OR 713-870-9578 (CELL) FOR WWTP SALVAGE AT LEAST 72 HOURS PRIOR TO DEMOLITION IN ORDER TO COORDINATE REMOVAL OF ANY ITEMS THE CITTY WISHES TO CLAIM AS.
2. CONTRACTOR TO ROD OR USE HIGH PRESSURE JET SYSTEM TO CLEAN SUCTION PIPES TO WAS PUMPS SO THAT ORIGINAL INSIDE PIPE DIAMETER IS RESTORED.
3. CONTRACTOR TO COORDINATE PLANT SHUTDOWN WITH WASTEWATER OPERATIONS.
4. THE CITY DOES NOT GUARANTEE POSITIVE SHUTOFF OF ANY VALVE THAT MAY REQUIRE CLOSING IN ORDER TO PERFORM CONSTRUCTION ACTIVITIES. CONTRACTOR SHALL PROVIDE EQUIPMENT AND LABOR (BYPASS) NECESSARY TO CONTROL WATER/SLUDGE SPILLAGE AT NO ADDITIONAL COST TO THE OWNER.
5. PERFORM ALL DEMOLITION WORK IN ACCORDANCE WITH SPECIFICATION 02220-FACILITY DEMOLITION, 02221 REMOVING EXISTING PAVEMENT AND STRUCTURES, 02222 - ABANDONMENT OF SEWERS, AND 02233 - CLEARING AND GRUBBING.
6. REPAIR ALL CONCRETE SURFACE DAMAGE EXPOSED BY DEMOLITION WORK.
7. ALL EQUIPMENT SHALL BE DE-ENERGIZED AND MADE SAFE PRIOR TO DEMOLITION WORK IN ACCORDANCE WITH SPECIFICATION 16060 - ELECTRICAL DEMOLITION USING LOCK OUT/TAG OUT SAFETY PROCEDURES. THE CONTRACTOR SHALL COORDINATE WITH CENTERPOINT ENERGY TO DISCONNECT THE ELECTRICAL POWER.
8. DEMOLISH EXISTING PIPING TO NEAREST 8" PIPE FLANGE ABOVE GRADE.
9. DEMOLISH THE CURRENT SUCTION AND DISCHARGE HEADER, BRANCH PIPES, PUMPS, VALVES, AND ASSOCIATED EQUIPMENT.
10. EXISTING STRUCTURE, EQUIPMENT, ELEVATIONS, AND DETAILS SHOWN ARE NOT GUARANTEED TO BE ACCURATE AND ALL INCLUSIVE. EXISTING INFORMATION SHOWN IN APPROXIMATE BASED ON AVAILABLE RECORD DRAWINGS, AND SHOULD BE VERIFIED BY CONTRACTOR.
11. CONTRACTOR SHALL VERIFY THAT THE CONCRETE PAD DRAIN AND DRAIN OUTLET ARE CLEAR AND FREE OF OBSTRUCTIONS. CLEAN, FLUSH, OR JET THE DRAIN LINE AS NECESSARY TO RESTORE PROPER DRAINAGE.

NO.	DATE	REVISION	APP.

Jacobs
JACOBS ENGINEERING GROUP INC.
818 TOWN & COUNTRY BLVD
SUITE 500 281-721-8400
TEXAS REGISTRATION NO.: F-2966

MBROH 20 ENGINEERING
11757 KATY FWY,
SUITE 625
HOUSTON, TX 77077
713-468-2545

SURVEYED BY:
FB NO.

THESE DOCUMENTS ARE FOR INTERIM REVIEW AND NOT FOR CONSTRUCTION, BIDDING OR PERMIT PURPOSES.
RESPONSIBLE ENGINEER:
JACOBS ENGINEERING GROUP INC
SUJING GUO, P.E.
TEXAS REGISTRATION NO. F-2966
60% SUBMITTAL

CITY OF HOUSTON
HOUSTON PUBLIC WORKS

WHITE OAKS WWTP IMPROVEMENTS

PROCESS MECHANICAL
DEMOLITION PLAN
CLARIFIER SPLITTER BOX STOPLOGS

WBS NUMBER	FOR CITY OF HOUSTON USE ONLY
R-000265-0158-3	
DRAWING SCALE	
NONE	
CITY OF HOUSTON PM	
SHAHIDUR RAHMAN, PE	

M-03 | SHEET NO. 22 OF 189

FILE PATH: C:\Users\vmcoski\OneDrive - Jacobs\Documents\Project Work\White Oak WWTP\White Oak Design\Drawing\2026 60% Design\Design\PRODUCTION DRAWINGS\03-Clarifier Splitter Box\03_STOPLOGS_ctb_230809.ctb PLOTTED: 03/11/2026

FILE PATH: C:\Users\mccoskl\OneDrive - Jacobs\Documents\Project Work\White Oak WWTP\White Oak Design\Drawing\2026 60% Design\Design\PRODUCTION DRAWINGS\04-WAS Pump Demolition\Rb0TP5Pxzt_Drg_Coh_ctb_230809.ctb PLOTTED: 03/11/2026

NOTES BY SYMBOL " ⬡ ":

1. REFER TO STRUCTURAL DRAWINGS FOR DEMOLITION OF EXISTING PUMP PADS.
2. DEMOLITION LIMIT.
3. CONTRACTOR SHALL FIELD VERIFY DEMOLITION LIMITS AND DETERMINE EXTENT OF DEMOLITION LIMIT.

NO.	DATE	REVISION	APP.

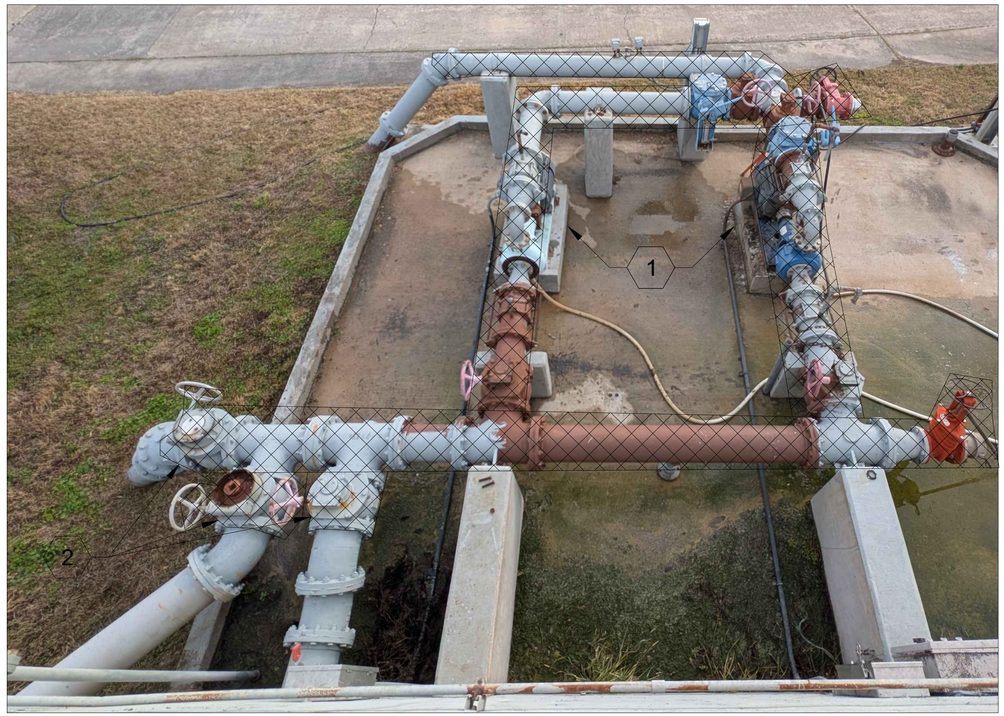

PHOTOGRAPH 1 - WAS PUMP STATION - PLAN VIEW

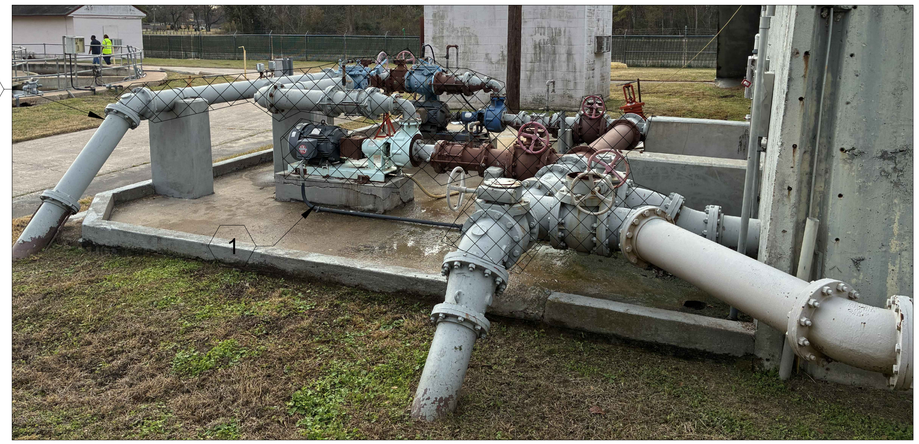

PHOTOGRAPH 2 - WAS PUMP STATION - SIDE VIEW

Jacobs
JACOBS ENGINEERING GROUP INC.
818 TOWN & COUNTRY BLVD
SUITE 500 281-721-8400
TEXAS REGISTRATION NO.: F-2966

MBROH 20 ENGINEERING
11757 KATY FWY,
SUITE 625
HOUSTON, TX 77077
713-468-2545

SURVEYED BY:
FB NO.

THESE DOCUMENTS ARE FOR INTERIM REVIEW AND NOT FOR CONSTRUCTION, BIDDING OR PERMIT PURPOSES.
RESPONSIBLE ENGINEER:
JACOBS ENGINEERING GROUP INC
SUJING GUO, P.E.
TEXAS REGISTRATION NO. F-2966
60% SUBMITTAL

CITY OF HOUSTON
HOUSTON PUBLIC WORKS

WHITE OAKS WWTP IMPROVEMENTS

PROCESS MECHANICAL
DEMOLITION PLAN
WAS PUMP STATION

WBS NUMBER	FOR CITY OF HOUSTON USE ONLY
R-000265-0158-3	
DRAWING SCALE	
NONE	
CITY OF HOUSTON PM	
SHAHIDUR RAHMAN, PE	

FILE PATH: C:\Users\mccoskl\OneDrive – Jacobs\Documents\Project Work\White Oak WWTP\White Oak Design\Drowing\2026 60% Design\Design\PRODUCTION DRAWINGS\05-Demolition Plan-BLOWER BUILDING_230809.ctb PLOTTED: 03/11/2026

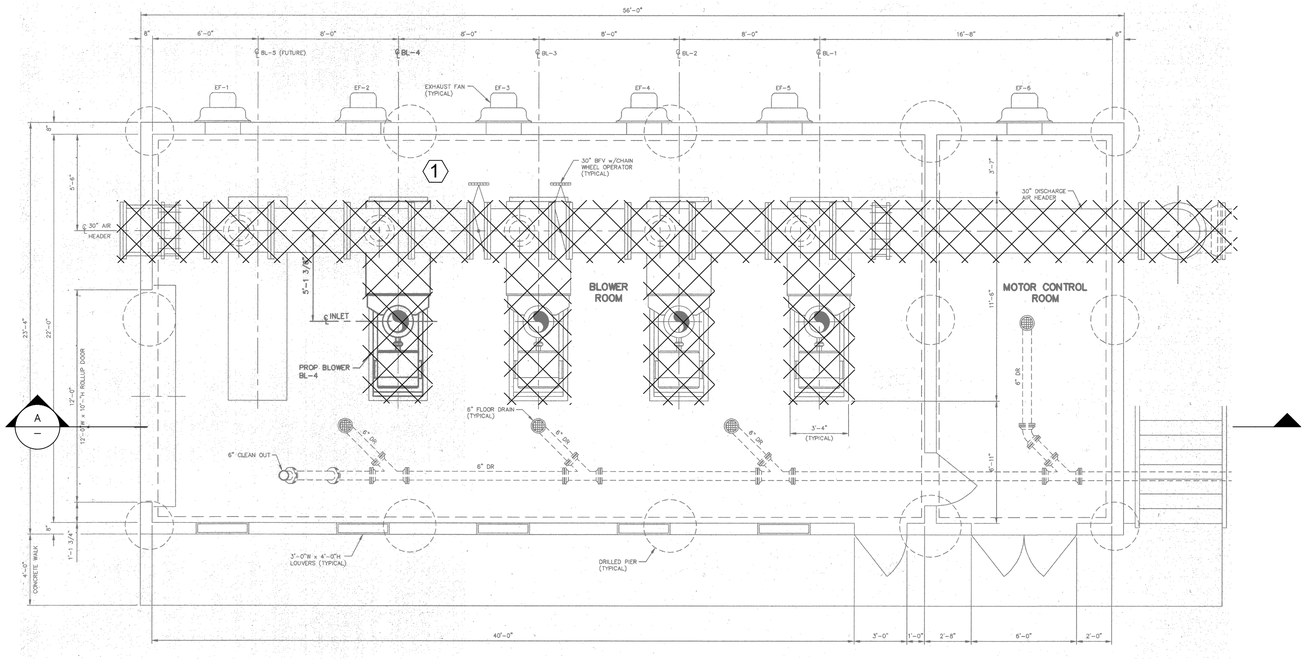

PLAN
NTS

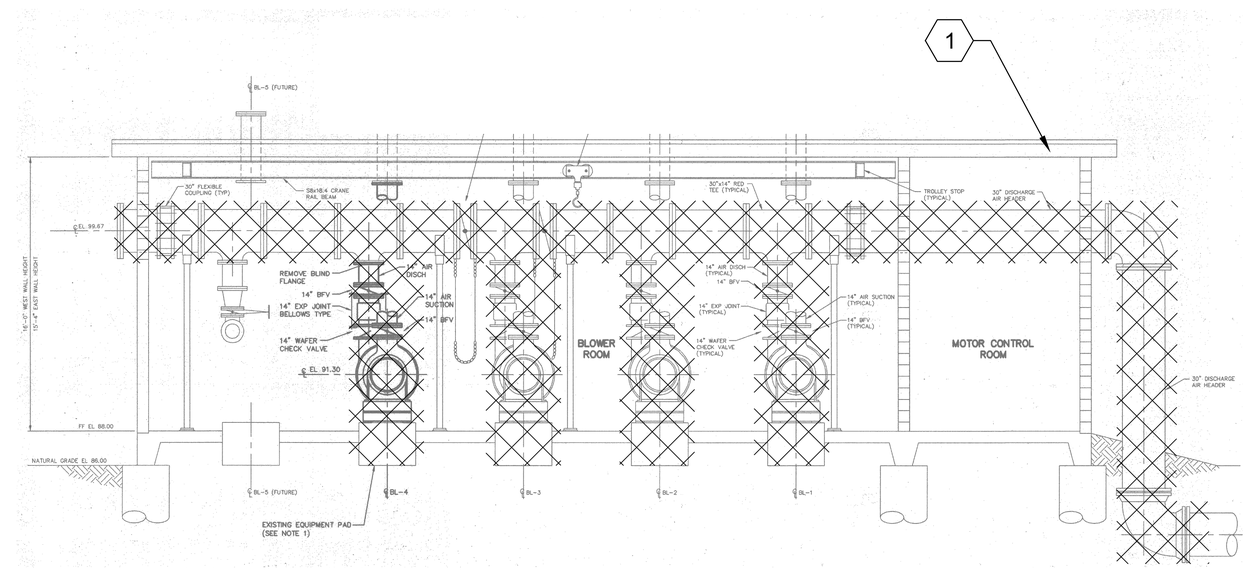

SECTION A
NTS

NOTES BY SYMBOL " ⬡ ":

1. REFER TO ARCHITECTURAL AND STRUCTURAL DRAWINGS FOR BUILDING AND STRUCTURE DEMOLITION.

NO.	DATE	REVISION	APP.

Jacobs
JACOBS ENGINEERING GROUP INC.
818 TOWN & COUNTRY BLVD
SUITE 500 281-721-8400
TEXAS REGISTRATION NO.: F-2966

MBROH ENGINEERING 20
11757 KATY FWY,
SUITE 625
HOUSTON, TX 77077
713-468-2545

THESE DOCUMENTS ARE FOR INTERIM REVIEW AND NOT FOR CONSTRUCTION, BIDDING OR PERMIT PURPOSES.
RESPONSIBLE ENGINEER:
JACOBS ENGINEERING GROUP INC
SUJING GUO, P.E.
TEXAS REGISTRATION NO. F-2966
60% SUBMITTAL

SURVEYED BY:
FB NO.

CITY OF HOUSTON
HOUSTON PUBLIC WORKS

WHITE OAKS WWTP IMPROVEMENTS
PROCESS MECHANICAL
DEMOLITION PLAN
BLOWER BUILDING

WBS NUMBER	FOR CITY OF HOUSTON USE ONLY
R-000265-0158-3	
DRAWING SCALE	
NONE	
CITY OF HOUSTON PM	
SHAHIDUR RAHMAN, PE	

FILE PATH: C:\Users\mccoski\OneDrive - Jacobs\Documents\Project Work\White Oak WWTP\White Oak Design\Drawing\2026 60% Design\PRODUCTION DRAWINGS\06-Aeration Basin Improvement 1.dwg, ctb_230809.ctb
PLOTTED: 03/11/2026

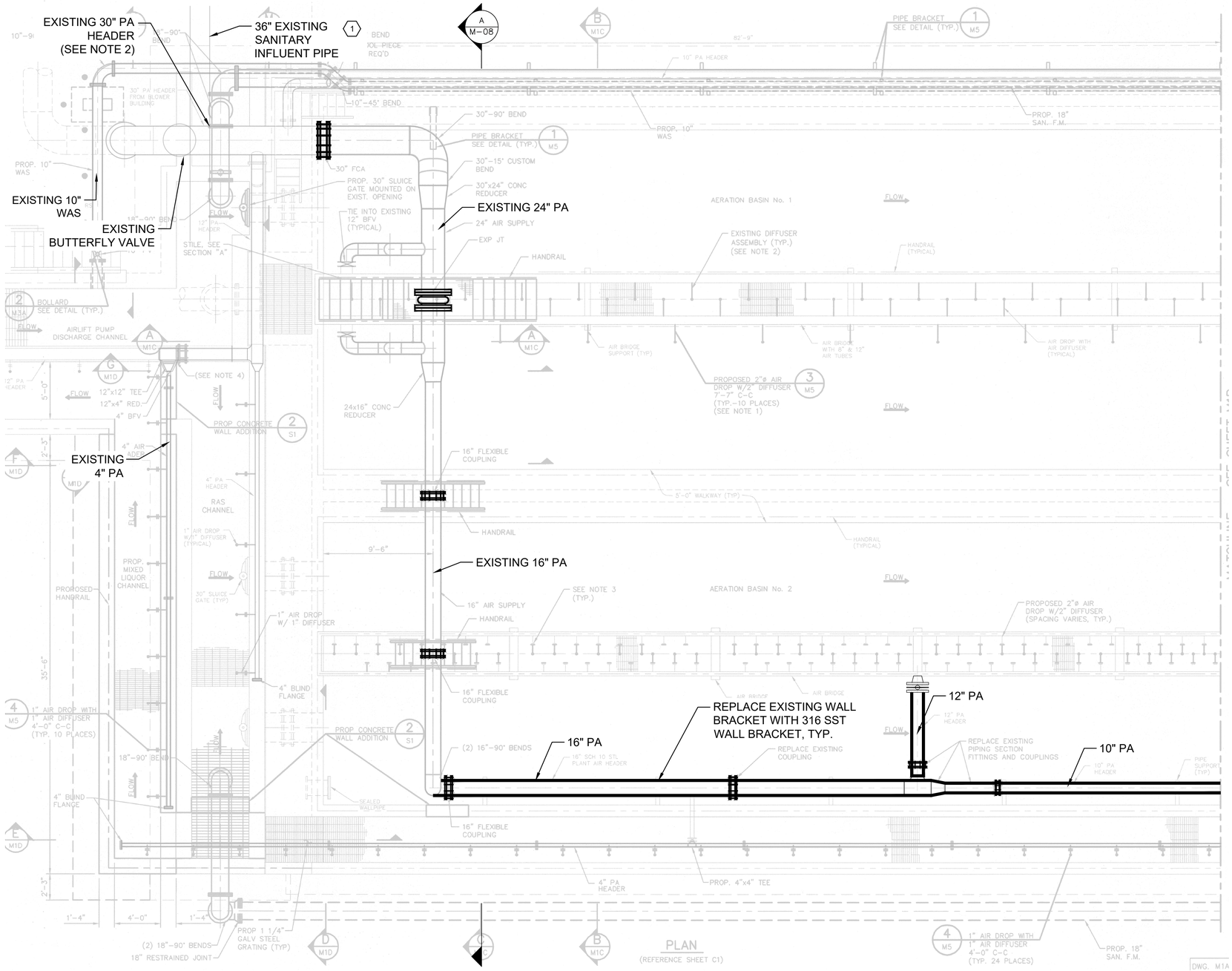

PLAN
NTS

GENERAL NOTES:

1. CONTRACTOR SHALL INSPECT THE AIR PIPING AT AERATION BASIN, VERIFY AND DELINEATE EXTENT OF REPAIRS. REPLACE ALL AERATION PIPING IN KIND IF LEAKING IS IDENTIFIED. SUBMIT PHOTOS AND REPAIR PLAN TO ENGINEER FOR APPROVAL PRIOR TO REPAIRS.
2. COAT AND STENCIL ABOVE GRADE PIPES PER TCEQ REQUIREMENT (SLUDGE-BROWN, AIR-LIGHT GREEN, SEWAGE-GREY, POTABLE WATER-LIGHT BLUE) FOLLOWING THE TAG FORMAT " SIZE" - CONTENT" (EX: 10" - PLANT AIR").

NOTES BY SYMBOL " ⬡ ":

1. FIELD VERIFIED LOCATION AND INVERT ELEVATION OF ABOVE GRADE 36" INFLUENT SANITARY PIPE.

NO.	DATE	REVISION	APP.

Jacobs
JACOBS ENGINEERING GROUP INC.
818 TOWN & COUNTRY BLVD
SUITE 500 281-721-8400
TEXAS REGISTRATION NO.: F-2966

MBROH 20 ENGINEERING
11757 KATY FWY,
SUITE 625
HOUSTON, TX 77077
713-468-2545

SURVEYED BY:
FB NO.

THESE DOCUMENTS ARE FOR INTERIM REVIEW AND NOT FOR CONSTRUCTION, BIDDING OR PERMIT PURPOSES.
RESPONSIBLE ENGINEER:
JACOBS ENGINEERING GROUP INC
SUJING GUO, P.E.
TEXAS REGISTRATION NO. F-2966
60% SUBMITTAL

CITY OF HOUSTON
HOUSTON PUBLIC WORKS

WHITE OAKS WWTP IMPROVEMENTS

PROCESS MECHANICAL

AERATION BASIN IMPROVEMENT 1

WBS NUMBER	FOR CITY OF HOUSTON USE ONLY
R-000265-0158-3	
DRAWING SCALE	
NONE	
CITY OF HOUSTON PM	
SHAHIDUR RAHMAN, PE	

FILE PATH: C:\Users\vmccoski\OneDrive – Jacobs\Documents\Project Work\White Oak WWTP\White Oak Design\Drawing\2026 60% Design\Design\PROCESS MECHANICAL\M-07 AERATION BASIN IMPROVEMENT 2.dwg, ctb_230809.ctb PLOTTED: 03/11/2026

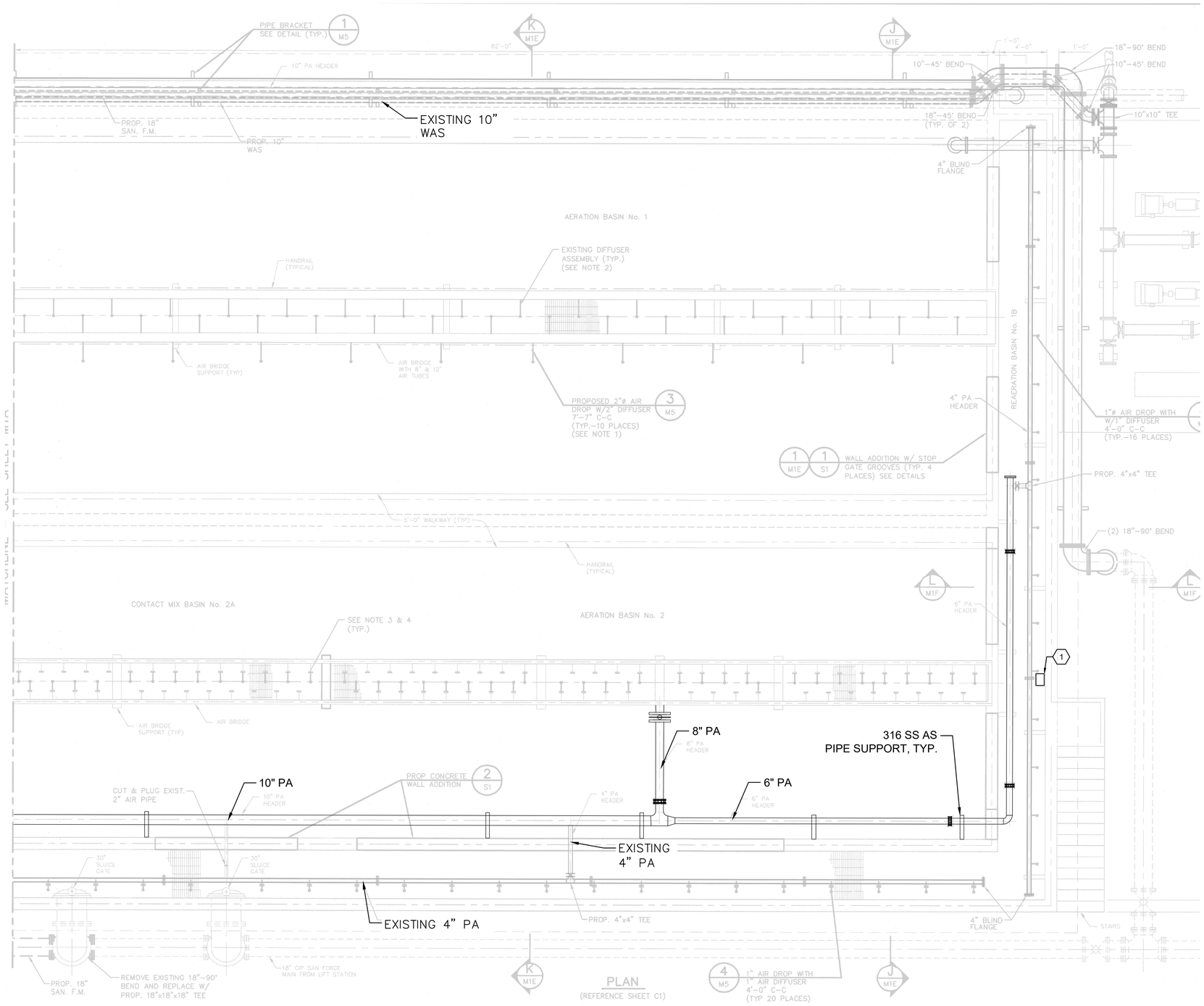

PLAN
NTS

GENERAL NOTES:

1. CONTRACTOR SHALL INSPECT THE AIR PIPING AT AERATION BASIN, VERIFY AND DELINEATE EXTENT OF REPAIRS. REPLACE ALL AERATION PIPING IN KIND IF LEAKING IS IDENTIFIED. SUBMIT PHOTOS AND REPAIR PLAN TO ENGINEER FOR APPROVAL PRIOR TO REPAIRS.
2. COAT AND STENCIL ABOVE GRADE PIPES PER TCEQ REQUIREMENT (SLUDGE-BROWN, AIR-LIGHT GREEN, SEWAGE-GREY, POTABLE WATER-LIGHT BLUE) FOLLOWING THE TAG FORMAT " SIZE" - CONTENT" (EX: 10" - PLANT AIR").

NOTES BY SYMBOL " ⬡ ":

1. FIELD VERIFY SENSOR LOCATION. INSTALLATION DETAILS, MOUNTING CONFIGURATION, AND REQUIRED SENSOR SUBMERGENCE DEPTH SHALL BE COORDINATED WITH THE INSTRUMENT MANUFACTURER. PROVIDE INSTALLATION IN ACCORDANCE WITH THE MANUFACTURER'S RECOMMENDATIONS.

NO.	DATE	REVISION	APP.

Jacobs
JACOBS ENGINEERING GROUP INC.
818 TOWN & COUNTRY BLVD
SUITE 500 281-721-8400
TEXAS REGISTRATION NO.: F-2966

MBROH 20 ENGINEERING
11757 KATY FWY,
SUITE 625
HOUSTON, TX 77077
713-468-2545

SURVEYED BY:
FB NO.

THESE DOCUMENTS ARE FOR INTERIM REVIEW AND NOT FOR CONSTRUCTION, BIDDING OR PERMIT PURPOSES.
RESPONSIBLE ENGINEER:
JACOBS ENGINEERING GROUP INC
SUJING GUO, P.E.
TEXAS REGISTRATION NO. F-2966
60% SUBMITTAL

CITY OF HOUSTON
HOUSTON PUBLIC WORKS

WHITE OAKS WWTP IMPROVEMENTS

PROCESS MECHANICAL

AERATION BASIN IMPROVEMENT 2

WBS NUMBER	FOR CITY OF HOUSTON USE ONLY
R-000265-0158-3	
DRAWING SCALE	
NONE	
CITY OF HOUSTON PM	
SHAHIDUR RAHMAN, PE	
M-07 SHEET NO. 26 OF 189	

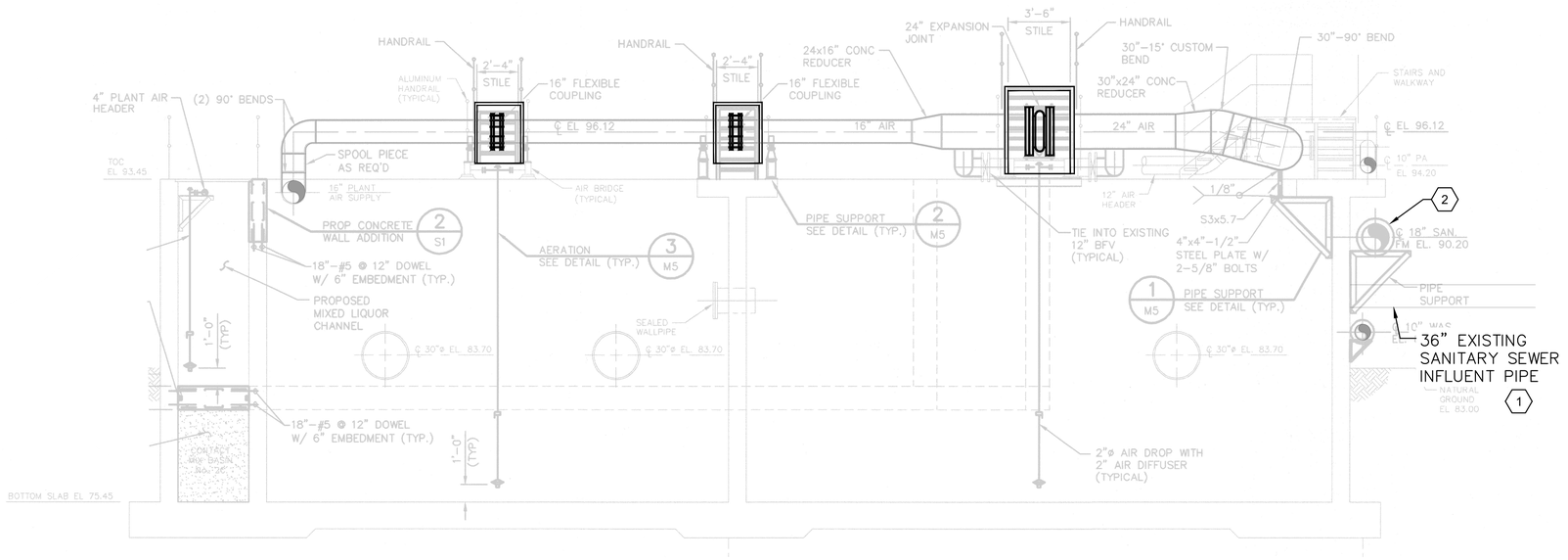

SECTION A
NTS M-06

GENERAL NOTES:

1. CONTRACTOR SHALL INSPECT THE AIR PIPING AT AERATION BASIN, VERIFY AND DELINEATE EXTENT OF REPAIRS. REPLACE ALL AERATION PIPING IN KIND IF LEAKING IS IDENTIFIED. SUBMIT PHOTOS AND REPAIR PLAN TO ENGINEER FOR APPROVAL PRIOR TO REPAIRS.
2. COAT AND STENCIL ABOVE GRADE PIPES PER TCEQ REQUIREMENT (SLUDGE-BROWN, AIR-LIGHT GREEN, SEWAGE-GREY, POTABLE WATER-LIGHT BLUE) FOLLOWING THE TAG FORMAT " SIZE" - CONTENT" (EX: 10" - PLANT AIR").

NOTES BY SYMBOL " ⬡ ":

1. FIELD VERIFIED LOCATION AND INVERT ELEVATION OF ABOVE GRADE 36" INFLUENT SANITARY PIPE.
2. EXISTING 18" SANITARY PIPES HAVE BEEN DEMOLISHED PREVIOUSLY AND DO NOT EXIST.

NO.	DATE	REVISION	APP.

Jacobs
JACOBS ENGINEERING GROUP INC.
818 TOWN & COUNTRY BLVD
SUITE 500 281-721-8400
TEXAS REGISTRATION NO.: F-2966

MBROH 20 ENGINEERING
11757 KATY FWY,
SUITE 625
HOUSTON, TX 77077
713-468-2545

SURVEYED BY:
FB NO.

THESE DOCUMENTS ARE FOR INTERIM REVIEW AND NOT FOR CONSTRUCTION, BIDDING OR PERMIT PURPOSES.
RESPONSIBLE ENGINEER:
JACOBS ENGINEERING GROUP INC
SUJING GUO, P.E.
TEXAS REGISTRATION NO. F-2966
60% SUBMITTAL

CITY OF HOUSTON
HOUSTON PUBLIC WORKS

WHITE OAKS
WWTP IMPROVEMENTS
PROCESS MECHANICAL

AERATION BASIN IMPROVEMENT 3

WBS NUMBER	FOR CITY OF HOUSTON USE ONLY
R-000265-0158-3	
DRAWING SCALE	
NONE	
CITY OF HOUSTON PM	
SHAHIDUR RAHMAN, PE	
SHEET NO. 27 OF 189	

M-08

PLOTTED: 03/11/2026

FILE PATH: C:\Users\mccoskl\OneDrive - Jacobs\Documents\Project Work\White Oak WWTP\White Oak Design\Drawing\2026 60% Design\Design\PRODUCTION DRAWINGS\08-Aeration Basin Improvement\D3_ctb_230809.ctb

PLOTTED: 08/27/26

SITE NORTH

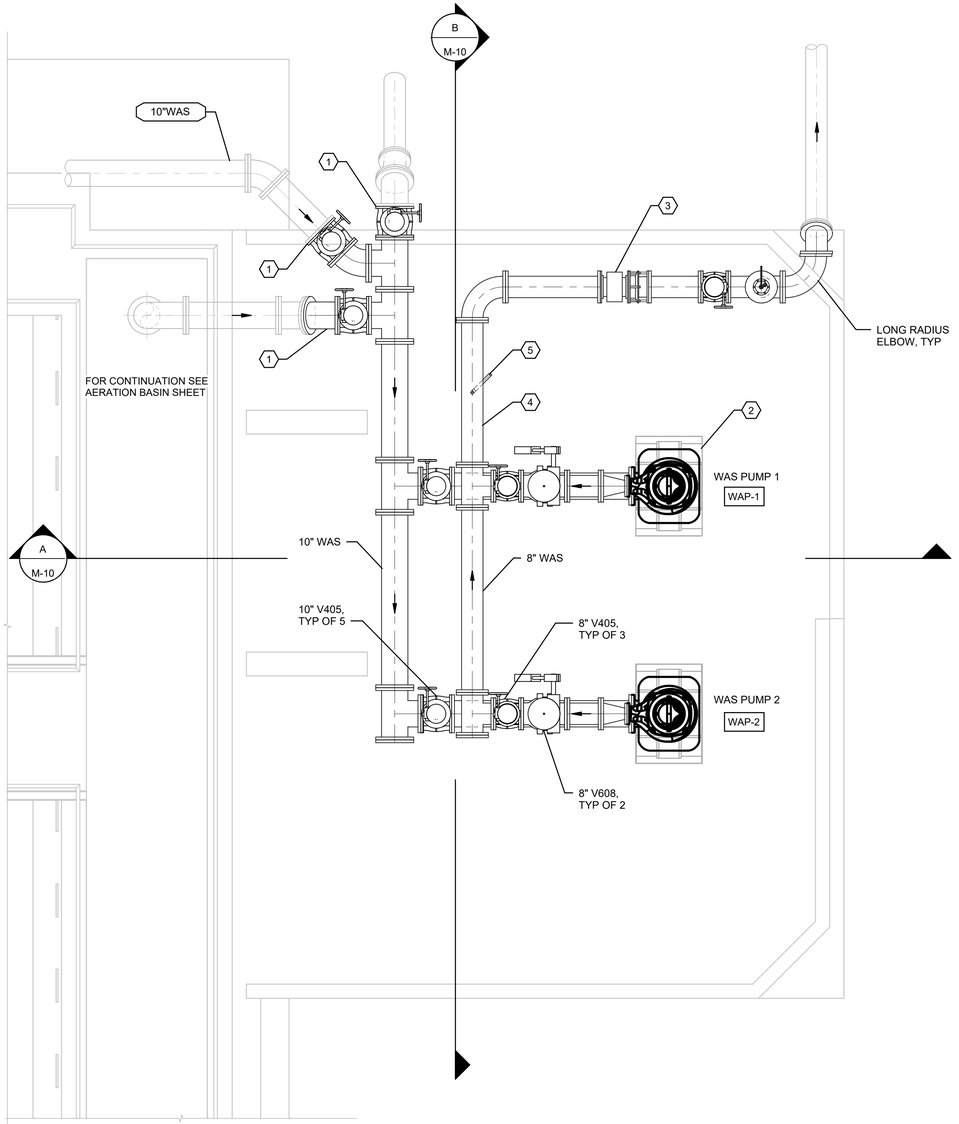

PLAN
3/8" = 1'-0"

KEY NOTES:

1. EXISTING 10-INCH WAS SUCTION LINE DEMOLITION LIMIT.
2. CONTRACTOR SHALL COORDINATE WITH THE PUMP MANUFACTURER ON THE DIMENSION OF THE PUMP CONCRETE PAD.
3. PROVIDE UPSTREAM/DOWNSTREAM STRAIGHT RUNS FOR 8" MAG FLOWMETER PER MANUFACTURER'S INSTRUCTIONS.
4. 316 SS PIPE SPOOL FOR TSS SENSOR.
5. TSS INSERTION PROBE, SEE XXX INSTALLATION DETAIL.

NO.	DATE	REVISION	APP.

Jacobs
JACOBS ENGINEERING GROUP INC.
818 TOWN & COUNTRY BLVD
SUITE 500 281-721-8400
TEXAS REGISTRATION NO.:F-2966

MBROH 20 ENGINEERING
11757 KATY FWY,
SUITE 625
HOUSTON, TX 77077
713-468-2545

SURVEYED BY:
FB NO.

THESE DOCUMENTS ARE FOR INTERIM REVIEW AND NOT FOR CONSTRUCTION, BIDDING OR PERMIT PURPOSES.
RESPONSIBLE ENGINEER:
JACOBS ENGINEERING GROUP INC
SUJIN GUO , P.E.
TEXAS REGISTRATION NO. F-2966
60% SUBMITTAL

CITY OF HOUSTON
HOUSTON PUBLIC WORKS

WHITE OAKS WWTP IMPROVEMENTS

PROCESS MECHANICAL

WAS PUMP STATION PLAN

WBS NUMBER	FOR CITY OF HOUSTON USE ONLY
ADD PROJ #	
DRAWING SCALE	
3/8" = 1'-0"	
CITY OF HOUSTON, PM	
SHAHIDUR RAHMAN, PE	

Autodesk Docs://White Oaks Wastewater Treatment Plant Improvements/25004152.01_CoH WHITE OAK_Improvements_Ex AB_PROC_R25.rvt

PLOTTED: 08/27/26

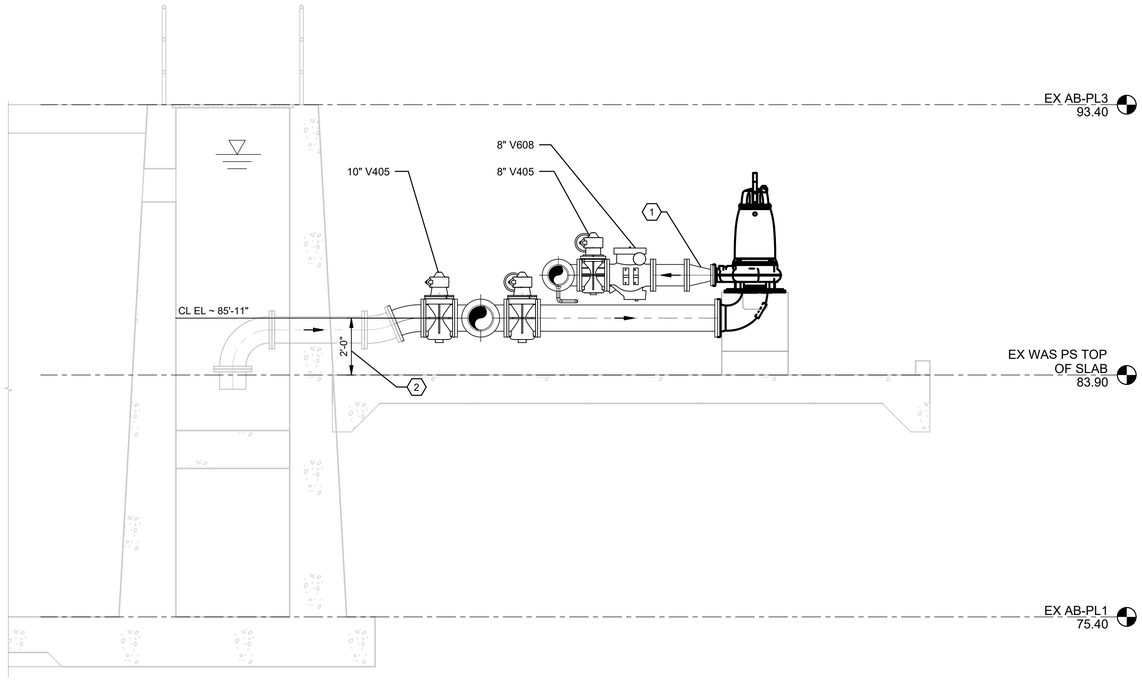

SECTION A
SCALE: 3/8" = 1'-0"
M-09

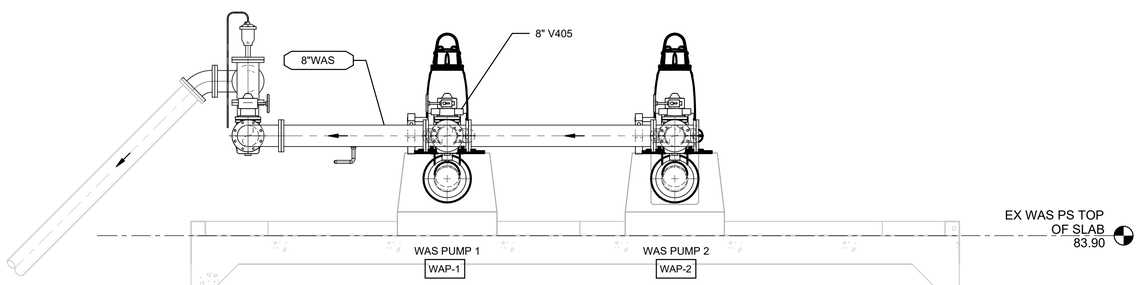

SECTION B
SCALE: 3/8" = 1'-0"
M-09

KEY NOTES:

1. CONCENTRIC REDUCER TO MATCH PUMP OUTLET.
2. CONTRACTOR SHALL FIELD VERIFY THE EXISTING 10". SUCTION PIPE INVERT ELEVATION AND ALIGN NEW PIPING AND PUMPS ACCORDINGLY.

NO.	DATE	REVISION	APP.

Jacobs
JACOBS ENGINEERING GROUP INC.
818 TOWN & COUNTRY BLVD
SUITE 500 281-721-8400
TEXAS REGISTRATION NO.:F-2966

MBROH 20 ENGINEERING
11757 KATY FWY,
SUITE 625
HOUSTON, TX 77077
713-468-2545

SURVEYED BY:
FB NO.

THESE DOCUMENTS ARE FOR INTERIM REVIEW AND NOT FOR CONSTRUCTION, BIDDING OR PERMIT PURPOSES.
RESPONSIBLE ENGINEER:
JACOBS ENGINEERING GROUP INC
SUJIN GUO , P.E.
TEXAS REGISTRATION NO. F-2966
60% SUBMITTAL

CITY OF HOUSTON
HOUSTON PUBLIC WORKS

WHITE OAKS WWTP IMPROVEMENTS

PROCESS MECHANICAL

WAS PUMP STATION SECTIONS

WBS NUMBER	FOR CITY OF HOUSTON USE ONLY
ADD PROJ #	
DRAWING SCALE	
3/8" = 1'-0"	
CITY OF HOUSTON, PM	
SHAHIDUR RAHMAN, PE	

Autodesk Docs://White Oaks Wastewater Treatment Plant Improvements/25004152.01_CoH WHITE OAK_Improvements_Ex AB_PROC_R25.rvt

PLOTTED: 09/01/26

SITE NORTH

GENERAL NOTES:

1. CONTRACTOR SHALL COORDINATE WITH BLOWER AND PIPING LAYOUT WITH MANUFACTURER PRIOR TO INSTALLATION.
2. BLOWER PIPING SHALL BE STENCILED AND COLOR COATED PER TECQ REQUIREMENT.
3. COORDINATE PLANT SHUTDOWN WITH WASTEWATER OPERATIONS.
4. ALL WORK AT SITE WHICH POTENTIALLY COULD INTERFERE WITH NORMAL OPERATIONS AT THE PLANT (AND /OR OFF-SITE FACILITIES) SHALL BE COORDINATED WITH THE PLANT SUPERVISOR THROUGH CONSTRUCTION MANAGER. CONTRACTOR SHALL SUBMIT A CONSTRUCTION SEQUENCING PLAN THAT SHOWS THAT NO PLANT OPERATIONS (OR OFF-SITE FACILITIES) WILL BE ADVERSELY AFFECTED FOR MORE THAN 4 HOURS IN ANY 24 HOUR PERIOD. ALL REQUESTS WHICH IMPACT NORMAL OPERATION OF THE PLANT SHALL BE SUBMITTED AT LEAST 5 DAYS IN ADVANCE.

NO.	DATE	REVISION	APP.

KEY NOTES:

1. DETERMINE BLOWER PAD SIZE IN ACCORDANCE WITH BLOWER SKID DIMENSIONS AND SEISMIC ANCHOR CALCULATIONS.

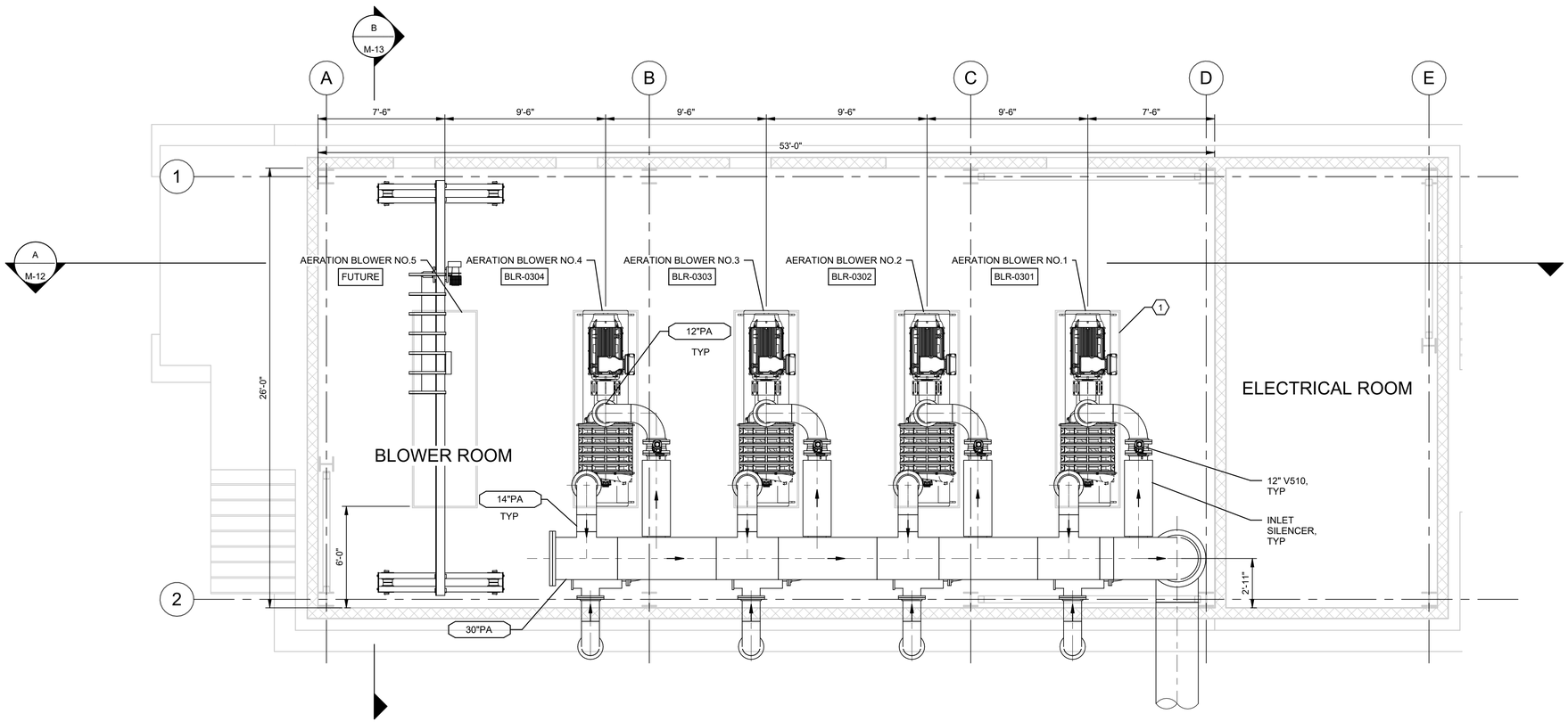

PLAN

1/4" = 1'-0"

Jacobs
JACOBS ENGINEERING GROUP INC.
818 TOWN & COUNTRY BLVD
SUITE 500 281-721-8400
TEXAS REGISTRATION NO.:F-2966

MBROH 20 ENGINEERING
11757 KATY FWY,
SUITE 625
HOUSTON, TX 77077
713-468-2545

THESE DOCUMENTS ARE FOR INTERIM REVIEW AND NOT FOR CONSTRUCTION, BIDDING OR PERMIT PURPOSES.
RESPONSIBLE ENGINEER:
JACOBS ENGINEERING GROUP INC
SUJIN GUO , P.E.
TEXAS REGISTRATION NO. F-2966
60% SUBMITTAL

SURVEYED BY:

FB NO.

CITY OF HOUSTON
HOUSTON PUBLIC WORKS

WHITE OAKS WWTP IMPROVEMENTS

PROCESS MECHANICAL

PROPOSED BLOWER BUILDING PLAN

WBS NUMBER	FOR CITY OF HOUSTON USE ONLY
ADD PROJ #	
DRAWING SCALE	
1/4" = 1'-0"	
CITY OF HOUSTON, PM	
SHAHIDUR RAHMAN, PE	

M-11 SHEET NO. 30 OF 189

Autodesk Docs://White Oaks Wastewater Treatment Plant Improvements/20031-20_PROC_R25.rvt

PLOTTED: 09/01/26

GENERAL NOTES:

1. CONTRACTOR SHALL COORDINATE WITH BLOWER AND PIPING LAYOUT WITH MANUFACTURER PRIOR TO INSTALLATION.
2. BLOWER PIPING SHALL BE STENCILED AND COLOR COATED PER TECQ REQUIREMENT.
3. COORDINATE PLANT SHUTDOWN WITH WASTEWATER OPERATIONS.
4. ALL WORK AT SITE WHICH POTENTIALLY COULD INTERFERE WITH NORMAL OPERATIONS AT THE PLANT (AND /OR OFF-SITE FACILITIES) SHALL BE COORDINATED WITH THE PLANT SUPERVISOR THROUGH CONSTRUCTION MANAGER. CONTRACTOR SHALL SUBMIT A CONSTRUCTION SEQUENCING PLAN THAT SHOWS THAT NO PLANT OPERATIONS (OR OFF-SITE FACILITIES) WILL BE ADVERSELY AFFECTED FOR MORE THAN 4 HOURS IN ANY 24 HOUR PERIOD. ALL REQUESTS WHICH IMPACT NORMAL OPERATION OF THE PLANT SHALL BE SUBMITTED AT LEAST 5 DAYS IN ADVANCE.

NO.	DATE	REVISION	APP.

KEY NOTES:

1. DETERMINE BLOWER PAD SIZE IN ACCORDANCE WITH BLOWER SKID DIMENSIONS AND SEISMIC ANCHOR CALCULATIONS.

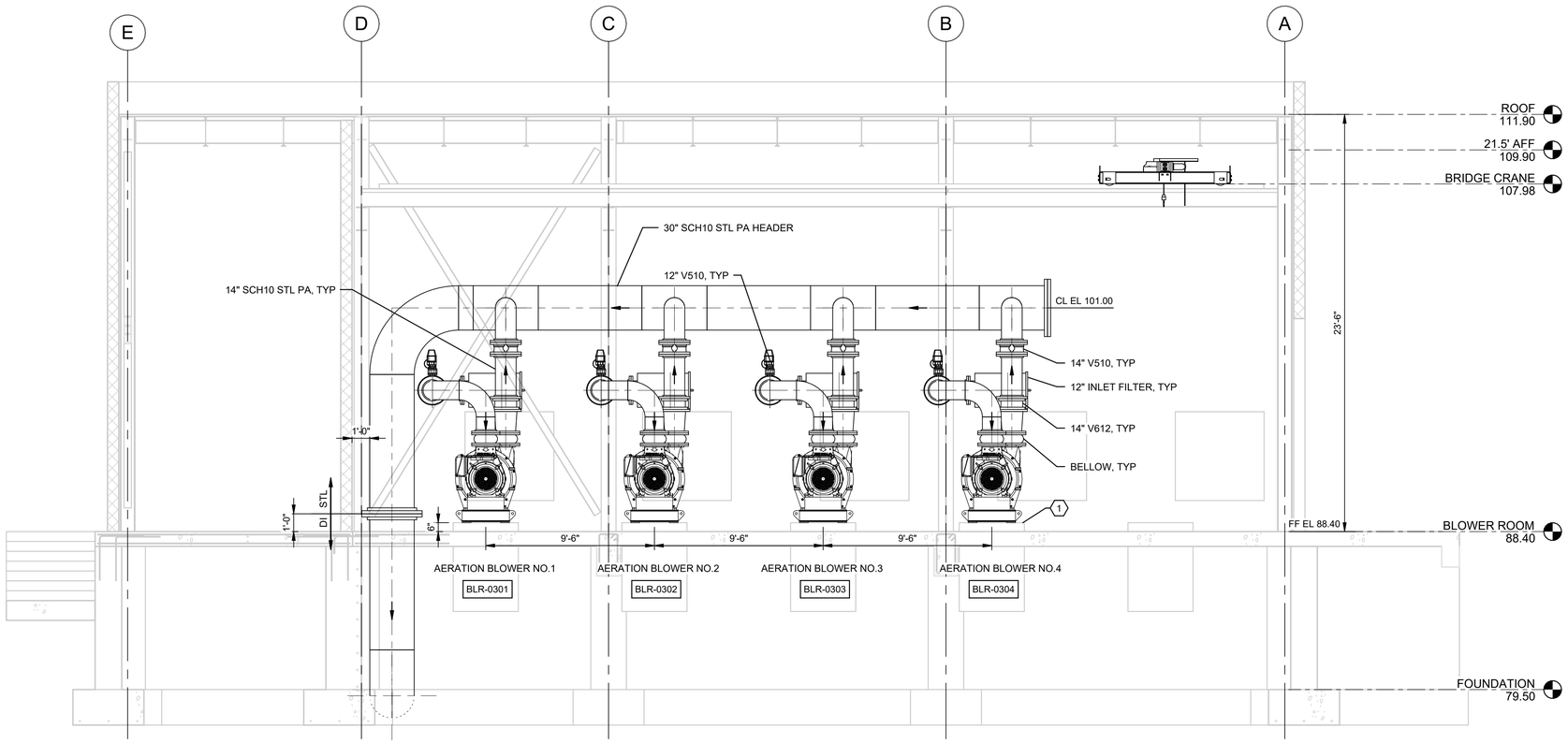

SECTION A
SCALE: 1/4" = 1'-0"
M-11

Jacobs
JACOBS ENGINEERING GROUP INC.
818 TOWN & COUNTRY BLVD
SUITE 500 281-721-8400
TEXAS REGISTRATION NO.:F-2966

MBROH 20 ENGINEERING
11757 KATY FWY,
SUITE 625
HOUSTON, TX 77077
713-468-2545

THESE DOCUMENTS ARE FOR INTERIM REVIEW AND NOT FOR CONSTRUCTION, BIDDING OR PERMIT PURPOSES.
RESPONSIBLE ENGINEER:
JACOBS ENGINEERING GROUP INC
SUJIN GUO , P.E.
TEXAS REGISTRATION NO. F-2966
60% SUBMITTAL

SURVEYED BY:
FB NO.

CITY OF HOUSTON
HOUSTON PUBLIC WORKS

WHITE OAKS WWTP IMPROVEMENTS

PROCESS MECHANICAL

PROPOSED BLOWER BUILDING SECTION A

WBS NUMBER	FOR CITY OF HOUSTON USE ONLY
ADD PROJ #	
DRAWING SCALE	
1/4" = 1'-0"	
CITY OF HOUSTON, PM	
SHAHIDUR RAHMAN, PE	

M-12 | SHEET NO. 31 OF 189

Autodesk Docs://White Oaks Wastewater Treatment Plant Improvements/20031-20_PROC_R25.rvt

PLOTTED: 09/01/26

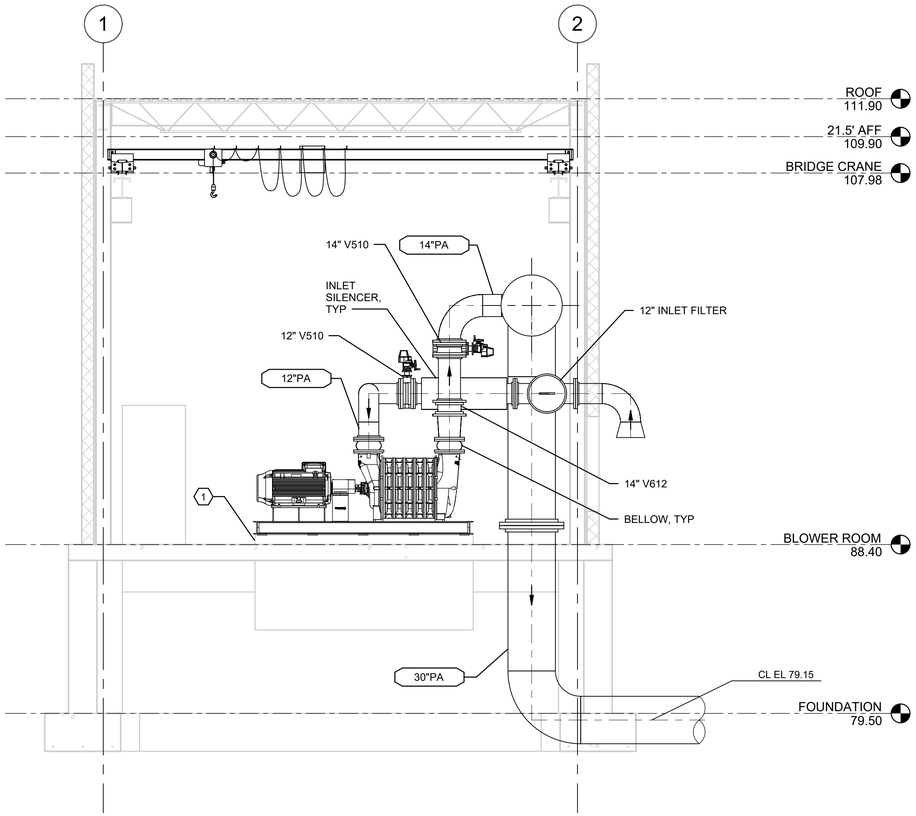

SECTION B
SCALE: 1/4" = 1'-0"
M-11

GENERAL NOTES:

1. CONTRACTOR SHALL COORDINATE WITH BLOWER AND PIPING LAYOUT WITH MANUFACTURER PRIOR TO INSTALLATION.
2. BLOWER PIPING SHALL BE STENCILED AND COLOR COATED PER TECQ REQUIREMENT.
3. COORDINATE PLANT SHUTDOWN WITH WASTEWATER OPERATIONS.
4. ALL WORK AT SITE WHICH POTENTIALLY COULD INTERFERE WITH NORMAL OPERATIONS AT THE PLANT (AND /OR OFF-SITE FACILITIES) SHALL BE COORDINATED WITH THE PLANT SUPERVISOR THROUGH CONSTRUCTION MANAGER. CONTRACTOR SHALL SUBMIT A CONSTRUCTION SEQUENCING PLAN THAT SHOWS THAT NO PLANT OPERATIONS (OR OFF-SITE FACILITIES) WILL BE ADVERSELY AFFECTED FOR MORE THAN 4 HOURS IN ANY 24 HOUR PERIOD. ALL REQUESTS WHICH IMPACT NORMAL OPERATION OF THE PLANT SHALL BE SUBMITTED AT LEAST 5 DAYS IN ADVANCE.

NO.	DATE	REVISION	APP.

KEY NOTES:

1. DETERMINE BLOWER PAD SIZE IN ACCORDANCE WITH BLOWER SKID DIMENSIONS AND SEISMIC ANCHOR CALCULATIONS.

Jacobs
JACOBS ENGINEERING GROUP INC.
818 TOWN & COUNTRY BLVD
SUITE 500 281-721-8400
TEXAS REGISTRATION NO.:F-2966

MBROH 20 ENGINEERING
11757 KATY FWY,
SUITE 625
HOUSTON, TX 77077
713-468-2545

SURVEYED BY:
FB NO.

THESE DOCUMENTS ARE FOR INTERIM REVIEW AND NOT FOR CONSTRUCTION, BIDDING OR PERMIT PURPOSES.
RESPONSIBLE ENGINEER:
JACOBS ENGINEERING GROUP INC
SUJIN GUO , P.E.
TEXAS REGISTRATION NO. F-2966
60% SUBMITTAL

CITY OF HOUSTON
HOUSTON PUBLIC WORKS

WHITE OAKS WWTP IMPROVEMENTS

PROCESS MECHANICAL

PROPOSED BLOWER BUILDING SECTION B

WBS NUMBER	FOR CITY OF HOUSTON USE ONLY
ADD PROJ #	
DRAWING SCALE	
1/4" = 1'-0"	
CITY OF HOUSTON, PM	
SHAHIDUR RAHMAN, PE	

M-13 | SHEET NO. 32 OF 189

Autodesk Docs://White Oaks Wastewater Treatment Plant Improvements/20031-20_PROC_R25.rvt

FILE PATH: C:\Users\mccosk\OneDrive - Jacobs\Documents\Project Work\White Oak WWTP\White Oak Design\Drawing\2026 60% Design\Design\PRODUCTION DRAWINGS\14-Secondary Clarifier\Plot\Secondary Clarifier_Plot_230809.ctb PLOTTED: 03/11/2026

NOTES BY SYMBOL " ⬡ ":

1. FIX AIR LEAK AT HOSE CONNECTOR. REPLACE VALVES IN KIND.
2. REPLACE EXISTING WOOD SPLASH GUARD WITH FRP BOARD. FIELD DETERMINE DIMENSIONS PRIOR TO PURCHASE OF MATERIAL.
3. FIX AIR LEAK AT AIR SUPPLY LINE.
4. CONTRACTOR TO REPLACE THE CLARIFIER MOTORS IN KIND WITH MODEL (WEG 3/4 HP STAINLESS STEEL MOTOR).
5. REPLACE EXISTING 10" PLUG VALVES AND VALVE BOXES. FIELD VERIFY DEPTH (APPROX. 20 FT.).
6. CONTRACTOR SHALL CHECK THE AIR PIPING LEAK AT FLANGES AND FLEXIBLE COUPLINGS.

NO.	DATE	REVISION	APP.

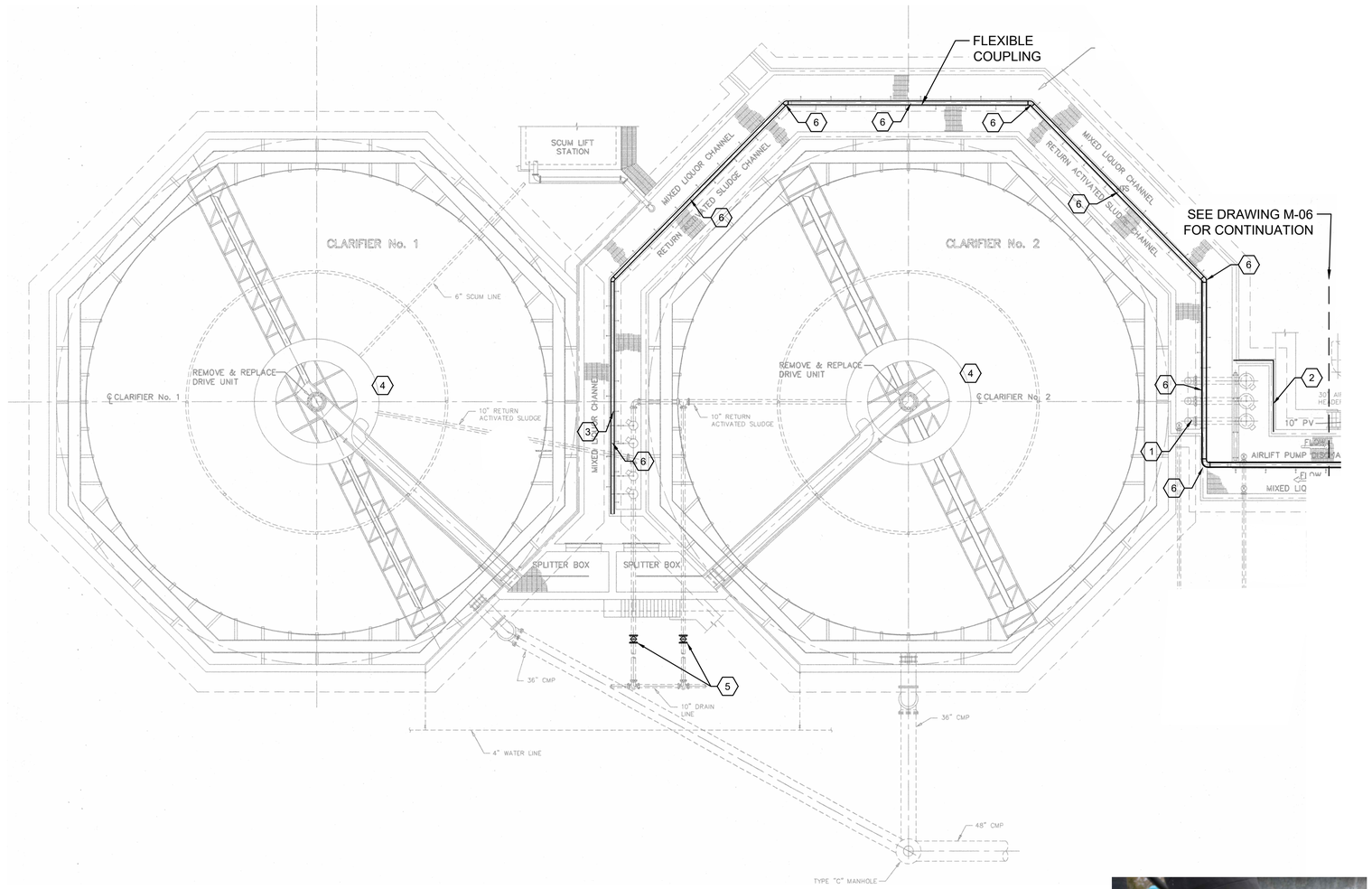



PHOTOGRAPH 1 -



PHOTOGRAPH 2 -

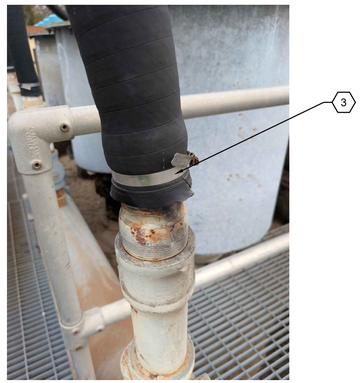

PHOTOGRAPH 3 -

Jacobs
JACOBS ENGINEERING GROUP INC.
818 TOWN & COUNTRY BLVD
SUITE 500 281-721-8400
TEXAS REGISTRATION NO.: F-2966

MBROH 20 ENGINEERING
11757 KATY FWY,
SUITE 625
HOUSTON, TX 77077
713-468-2545

SURVEYED BY:
FB NO.

THESE DOCUMENTS ARE FOR INTERIM REVIEW AND NOT FOR CONSTRUCTION, BIDDING OR PERMIT PURPOSES.
RESPONSIBLE ENGINEER:
JACOBS ENGINEERING GROUP INC
SUJING GUO, P.E.
TEXAS REGISTRATION NO. F-2966
60% SUBMITTAL

CITY OF HOUSTON
HOUSTON PUBLIC WORKS

WHITE OAKS WWTP IMPROVEMENTS

PROCESS MECHANICAL
SECONDARY CLARIFIER IMPROVEMENT 1

WBS NUMBER	FOR CITY OF HOUSTON USE ONLY
R-000265-0158-3	
DRAWING SCALE	
NONE	
CITY OF HOUSTON PM	
SHAHIDUR RAHMAN, PE	

M-14 SHEET NO. 33 OF 189

PLOTTED: 08/26/26

SITE NORTH

KEY NOTES:

1. CLARIFIER INFLUENT SPLITTER BOX WEIR GATE. ELECTRICAL OPERATOR WILL BE PROVIDED AND INSTALLED WITH NEW GATE. FOLLOW MANUFACTURER O&M MANUAL FOR PROPER MAINTENANCE.
2. MODIFY EXISTING GRATING AND GRATING SUPPORTS AS NECESSARY, SEE STRUCTURAL DRAWINGS FOR DETAILS.

NO.	DATE	REVISION	APP.

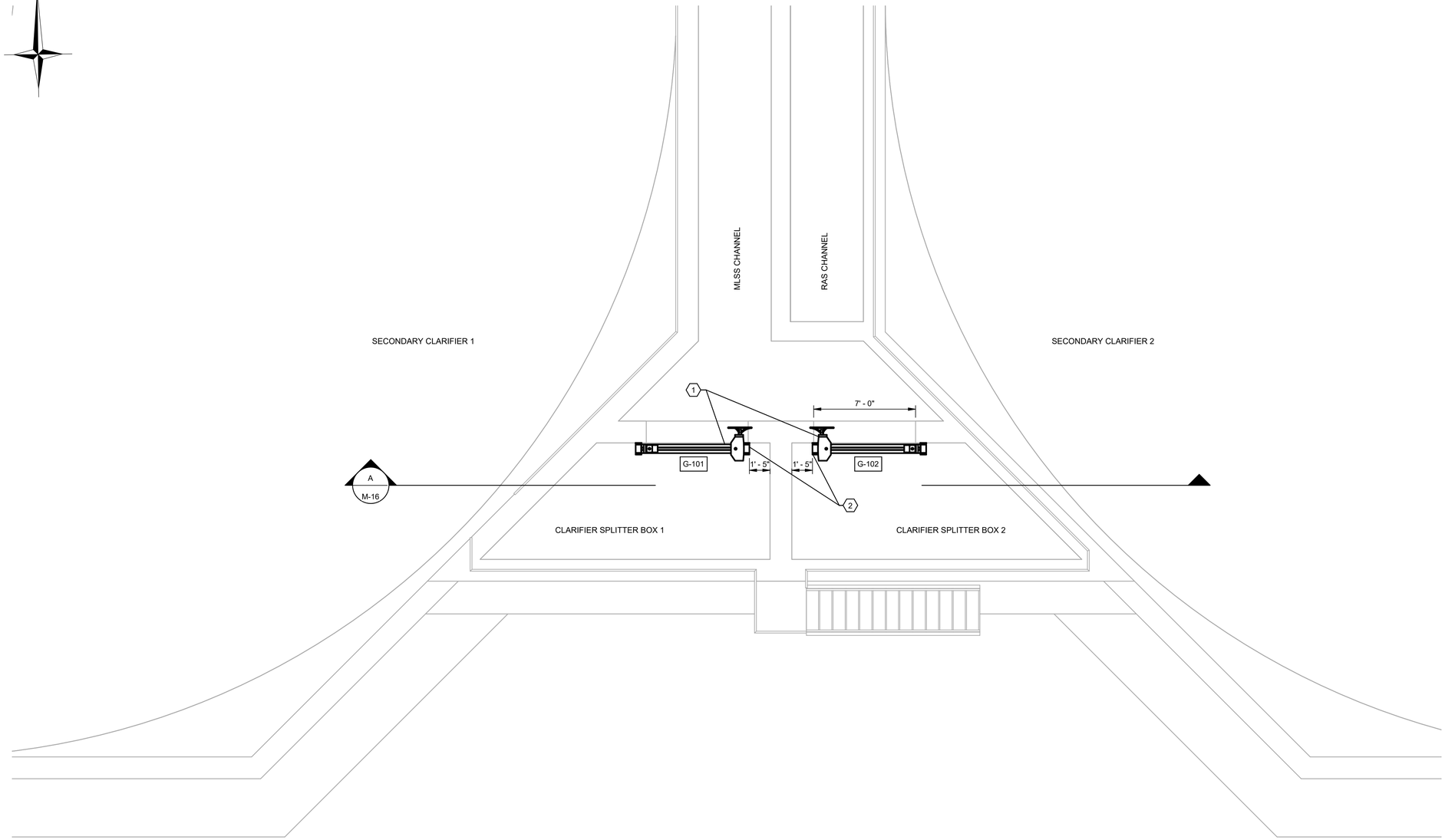

PLAN
1/4" = 1'-0"

Jacobs
JACOBS ENGINEERING GROUP INC.
818 TOWN & COUNTRY BLVD
SUITE 500 281-721-8400
TEXAS REGISTRATION NO.:F-2966

MBROH 20 ENGINEERING
11757 KATY FWY,
SUITE 625
HOUSTON, TX 77077
713-468-2545

SURVEYED BY:
FB NO.

THESE DOCUMENTS ARE FOR INTERIM REVIEW AND NOT FOR CONSTRUCTION, BIDDING OR PERMIT PURPOSES.
RESPONSIBLE ENGINEER:
JACOBS ENGINEERING GROUP INC
SUJIN GUO , P.E.
TEXAS REGISTRATION NO. F-2966
60% SUBMITTAL

CITY OF HOUSTON
HOUSTON PUBLIC WORKS

WHITE OAKS WWTP IMPROVEMENTS

PROCESS MECHANICAL

SECONDARY CLARIFIER IMPROVEMENT 2 - PLAN

WBS NUMBER	FOR CITY OF HOUSTON USE ONLY
ADD PROJ #	
DRAWING SCALE	
1/4" = 1'-0"	
CITY OF HOUSTON, PM	
SHAHIDUR RAHMAN, PE	

M-15 SHEET NO. 34 OF 189

Autodesk Docs://White Oaks Wastewater Treatment Plant Improvements/25004152.01_CoH WHITE OAK_Clarifiers_PROC_R25.rvt

PLOTTED: 08/26/26

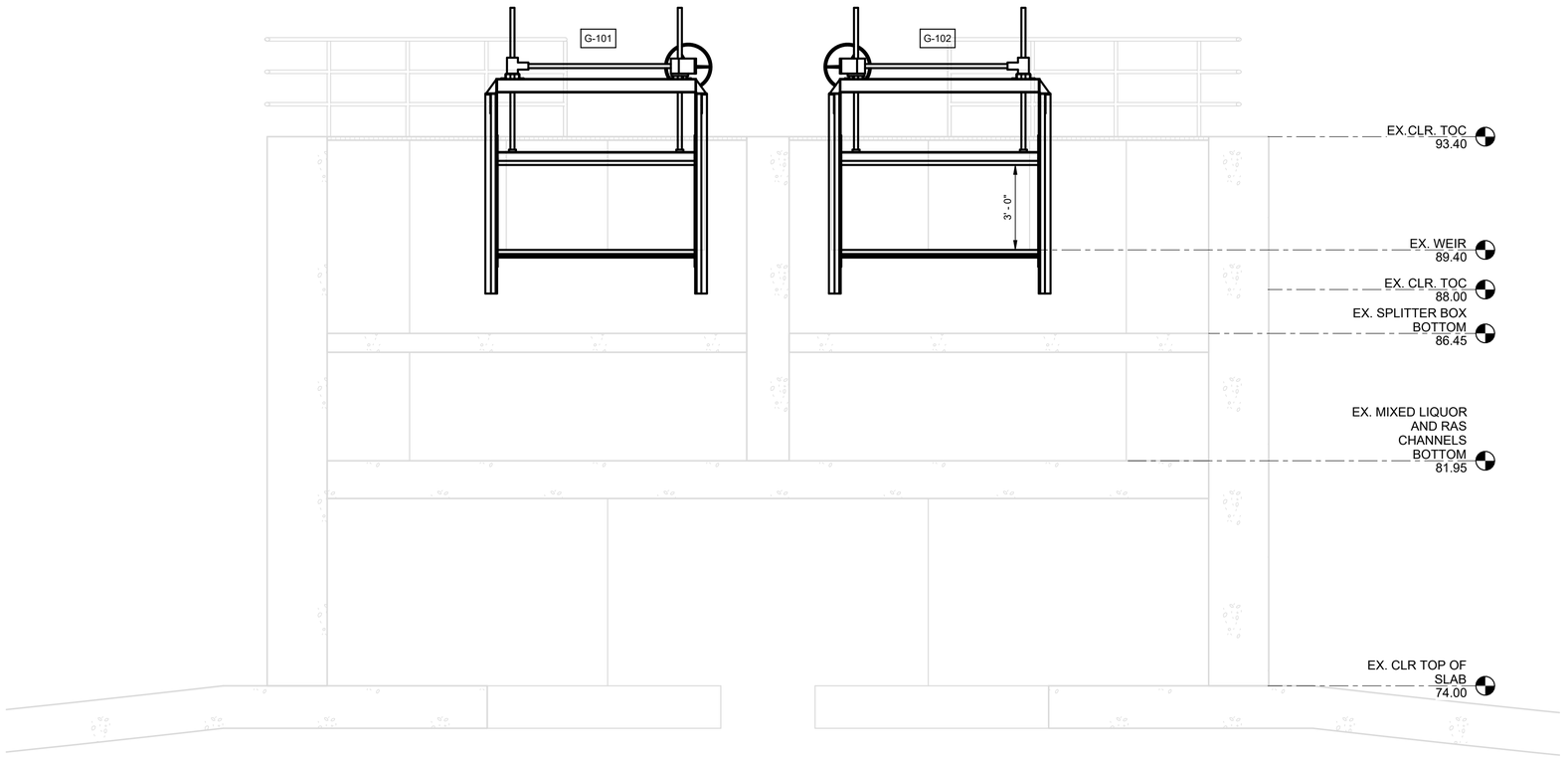

SECTION A
SCALE: 3/8" = 1'-0"
M-15

NO.	DATE	REVISION	APP.

Jacobs
JACOBS ENGINEERING GROUP INC.
818 TOWN & COUNTRY BLVD
SUITE 500 281-721-8400
TEXAS REGISTRATION NO.:F-2966

MBROH 20 ENGINEERING
11757 KATY FWY,
SUITE 625
HOUSTON, TX 77077
713-468-2545

THESE DOCUMENTS ARE FOR INTERIM REVIEW AND NOT FOR CONSTRUCTION, BIDDING OR PERMIT PURPOSES.
RESPONSIBLE ENGINEER:
JACOBS ENGINEERING GROUP INC
SUJIN GUO , P.E.
TEXAS REGISTRATION NO. F-2966
60% SUBMITTAL

SURVEYED BY:
FB NO.

CITY OF HOUSTON
HOUSTON PUBLIC WORKS

WHITE OAKS
WWTP IMPROVEMENTS

PROCESS MECHANICAL
SECONDARY CLARIFIER IMPROVEMENT
2 - SECTION

WBS NUMBER	FOR CITY OF HOUSTON USE ONLY
ADD PROJ #	
DRAWING SCALE	
3/8" = 1'-0"	
CITY OF HOUSTON, PM	
SHAHIDUR RAHMAN, PE	

M-16 SHEET NO. 35 OF 189

Autodesk Docs://White Oaks Wastewater Treatment Plant Improvements/25004152.01_CoH WHITE OAK_Clarifiers_PROC_R25.rvt

FILE PATH: C:\Users\mccoskl\OneDrive - Jacobs\Documents\Project Work\White Oak WWTP\White Oak Design\Drawing\2026 60% Design\Design\PRODUCTION DRAWINGS\17-Sodium Hypochlorite System Improvement.dwg
PLOTTED: 03/11/2026

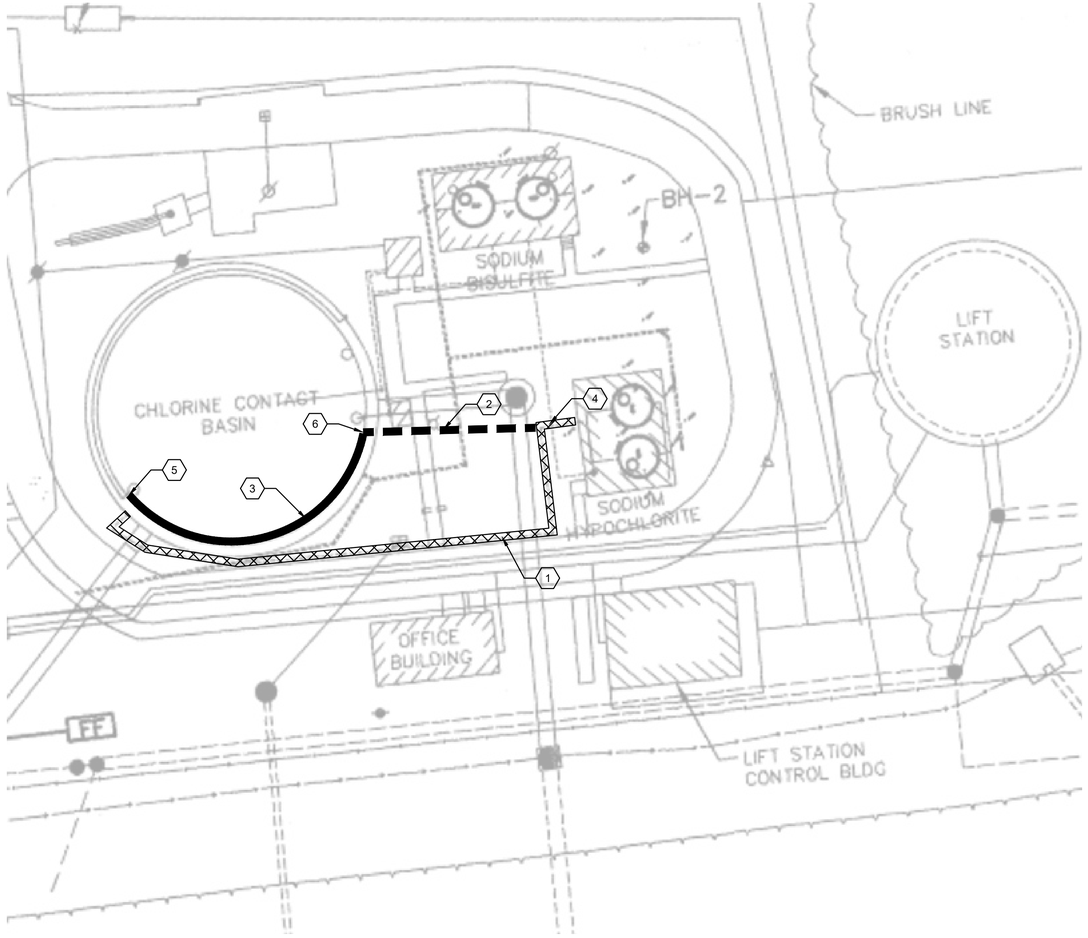

PLAN
NTS



PHOTOGRAPH 1



PHOTOGRAPH 2

GENERAL NOTES:

1. LOCATION OF EXISTING UNDERGROUND FACILITIES AND UTILITIES (INCLUDING BUT NOT LIMITED TO PLANT PIPING, VALVES AND ELECTRICAL DUCT BANKS) ARE BASED ON CONSTRUCTION PLANS OF PREVIOUS PROJECTS AND ARE NOT GUARANTEED TO BE COMPLETE AND/OR ACCURATE. CONTRACTOR SHALL VERIFY ALL UNDERGROUND FACILITIES/UTILITIES IN THE VICINITY OF PROPOSED WORK. CONTRACTOR SHALL NOTIFY THE CONSTRUCTION MANAGER OF ANY CONFLICTS PRIOR TO COMMENCING WORK.
2. CONTRACTOR TO FIELD VERIFY THE SIZE AND MATERIAL OF SODIUM HYPOCHLORITE DOSING PIPE.
3. EXISTING SODIUM HYPOCHLORITE PIPE TO BE ABANDONED IN PLACE.

NOTES BY SYMBOL " ⬡ ":

1. EXISTING BURIED HYPOCHLORITE DISCHARGE LINE TO BE ABANDONED IN PLACE.
2. BURIED DOUBLE CONTAINED CHEMICAL PIPE (1-INCH TUBE INSIDE 4-INCH SCHEDULE 80 PVC PIPE).
3. 1-INCH SCHEDULE 80 PVC PIPE MOUNT ALONG INSIDE EDGE OF BASIN TO EXISTING DOSING POINT.
4. CHEMICAL DOSING PIPING SYSTEM STARTING POINT AT EXISTING SODIUM HYPOCHLORITE STORAGE/FEED FACILITY, SEE PICTURE 1.
5. CHEMICAL DOSING PIPING SYSTEM TERMINATION POINT AT CHLORINE CONTACT BASIN (CCB) EDGE, SEE PICTURE 2.
6. END OF DOUBLE-CONTAINMENT PIPE. ANY LEAKAGE FROM THE PRIMARY CHEMICAL PIPE SHALL BE VISIBLE AT THIS LOCATION AND SHALL SERVE AS A VISUAL LEAK DETECTION POINT.

NO.	DATE	REVISION	APP.

Jacobs
JACOBS ENGINEERING GROUP INC.
818 TOWN & COUNTRY BLVD
SUITE 500 281-721-8400
TEXAS REGISTRATION NO.: F-2966

MBROH ENGINEERING 20
11757 KATY FWY,
SUITE 625
HOUSTON, TX 77077
713-468-2545

SURVEYED BY:
FB NO.

THESE DOCUMENTS ARE FOR INTERIM REVIEW AND NOT FOR CONSTRUCTION, BIDDING OR PERMIT PURPOSES.
RESPONSIBLE ENGINEER:
JACOBS ENGINEERING GROUP INC
SUJING GUO, P.E.
TEXAS REGISTRATION NO. F-2966
60% SUBMITTAL

CITY OF HOUSTON
HOUSTON PUBLIC WORKS

WHITE OAKS WWTP IMPROVEMENTS

PROCESS MECHANICAL
SODIUM HYPOCHLORITE SYSTEM IMPROVEMENT

WBS NUMBER	FOR CITY OF HOUSTON USE ONLY
R-000265-0158-3	
DRAWING SCALE	
NONE	
CITY OF HOUSTON PM	
SHAHIDUR RAHMAN, PE	

S T R U C T U R A L N O T E S

11/1/2026 10:53:56 PM

COORDINATION:

A. THE CONTRACTOR SHALL COMPARE THE ARCHITECTURAL, STRUCTURAL, MECHANICAL, ELECTRICAL, PLUMBING, AND OTHER SERIES DRAWINGS AND REPORT ANY DISCREPANCIES BETWEEN EACH SET OF DRAWINGS AND WITHIN EACH SET OF DRAWINGS PRIOR TO FABRICATION AND INSTALLATION OF ANY STRUCTURAL MEMBERS.

B. ONLY LARGER SLEEVE OPENINGS AND FRAMED OPENINGS IN STRUCTURAL FRAMING COMPONENT MEMBERS ARE INDICATED ON THE STRUCTURAL DRAWINGS. HOWEVER, ALL SLEEVES, INSERTS AND OPENINGS, INCLUDING FRAMES AND/OR SLEEVES SHALL BE PROVIDED FOR PASSAGE, PROVISION AND/OR INCORPORATION OF THE WORK OF THE CONTRACT, INCLUDING BUT NOT LIMITED TO MECHANICAL, ELECTRICAL AND PLUMBING WORK. THIS WORK SHALL INCLUDE THE COORDINATION OF SIZES, ALIGNMENT, DIMENSIONS, POSITION, LOCATIONS, ELEVATIONS AND GRADES AS REQUIRED TO SERVE THE INTENDED PURPOSE. OPENINGS NOT INDICATED ON THE STRUCTURAL DRAWINGS, BUT REQUIRED AS NOTED ABOVE, SHALL BE SUBMITTED TO THE ENGINEER FOR REVIEW.

C. REFER TO ARCHITECTURAL, MECHANICAL, ELECTRICAL AND PLUMBING DRAWINGS FOR FLOOR ELEVATIONS, SLOPES, DRAINS AND LOCATION OF DEPRESSED AND ELEVATED FLOOR AREAS.

D. COMPATIBILITY OF THE STRUCTURE AND PROVISIONS FOR BUILDING EQUIPMENT SUPPORTED ON OR FROM STRUCTURAL COMPONENTS SHALL BE VERIFIED AS TO SIZE, DIMENSIONS, CLEARANCES, ACCESSIBILITY, WEIGHTS AND REACTION WITH THE EQUIPMENT FOR WHICH THE STRUCTURE HAS BEEN DESIGNED PRIOR TO SUBMISSION OF SHOP DRAWINGS AND DATA FOR EACH PIECE OF EQUIPMENT AND FOR STRUCTURAL COMPONENTS. DIFFERENCES SHALL BE NOTED ON THE SUBMITTALS.

E. SHOP DRAWINGS SHALL BE PREPARED FOR ALL STRUCTURAL ITEMS AND SUBMITTED FOR REVIEW BY THE ENGINEER. STRUCTURAL DRAWINGS SHALL NOT BE REPRODUCED AND USED AS SHOP DRAWINGS. ALL ITEMS DEVIATING FROM THE STRUCTURAL DRAWINGS OR FROM PREVIOUSLY SUBMITTED SHOP DRAWINGS SHALL BE CLOUDED.

F. THE DETAILS DESIGNATED AS "TYPICAL DETAILS" APPLY GENERALLY TO THE STRUCTURAL DRAWINGS IN ALL AREAS WHERE CONDITIONS ARE SIMILAR TO THOSE DESCRIBED IN THE DETAILS.

G. ALL DIMENSIONS AND CONDITIONS OF EXISTING CONSTRUCTION SHALL BE VERIFIED AT THE JOB SITE PRIOR TO THE PREPARATION OF SHOP DRAWINGS. DIFFERENCES BETWEEN EXISTING CONSTRUCTION AND THAT SHOWN ON THE STRUCTURAL DRAWINGS SHALL BE REFERRED TO THE ARCHITECT. DIFFERENCES SHALL ALSO BE CLOUDED ON THE SHOP DRAWINGS.

H. ALL STRUCTURAL ELEMENTS OF THE PROJECT HAVE BEEN DESIGNED BY THE ENGINEER TO RESIST THE REQUIRED CODE VERTICAL AND LATERAL FORCES THAT COULD OCCUR IN THE FINAL COMPLETED STRUCTURE ONLY. IT IS THE RESPONSIBILITY OF THE CONTRACTOR TO PROVIDE ALL REQUIRED BRACING DURING CONSTRUCTION TO MAINTAIN THE STABILITY AND SAFETY OF ALL STRUCTURAL ELEMENTS DURING THE CONSTRUCTION PROCESS UNTIL THE LATERAL-LOAD RESISTING OR STABILITY-PROVIDING SYSTEM IS COMPLETELY INSTALLED AND THE STRUCTURE IS COMPLETELY TIED TOGETHER. TEMPORARY SUPPORTS SHALL NOT RESULT IN THE OVERSTRESS OR DAMAGE OF THE ELEMENTS TO BE BRACED NOR ANY ELEMENTS USED AS BRACE SUPPORTS.

I. THE CONTRACT STRUCTURAL DRAWINGS AND SPECIFICATIONS REPRESENT THE FINISHED STRUCTURE, AND EXCEPT WHERE SPECIFICALLY SHOWN, DO NOT INDICATE THE MEANS OR METHODS OF CONSTRUCTION. THE CONTRACTOR AND THEIR SUB-CONTRACTORS SHALL SUPERVISE AND DIRECT THE WORK AND SHALL BE SOLELY RESPONSIBLE FOR ALL CONSTRUCTION MEANS, METHODS, PROCEDURES, TECHNIQUES, SEQUENCES AND SAFETY MEASURES INCLUDING, BUT NOT LIMITED TO, ADHERENCES TO ALL OSHA GUIDELINES. THE ENGINEER SHALL NOT HAVE CONTROL OF, AND SHALL NOT BE RESPONSIBLE FOR, CONSTRUCTION MEANS, METHODS, TECHNIQUES, SEQUENCES OR PROCEDURES, FOR SAFETY PRECAUTIONS AND PROGRAMS IN CONNECTION WITH THE WORK, FOR THE ACTS OR OMISSIONS OF THE CONTRACTOR, SUBCONTRACTORS, OR ANY OTHER PERSON PERFORMING ANY OF THE WORK, OR FOR THE FAILURE OF ANY OF THESE PERSONS TO CARRY OUT THE WORK IN ACCORDANCE WITH THE STRUCTURAL CONTRACT DOCUMENTS.

J. WHERE CONFLICT EXISTS AMONG THE VARIOUS PARTS OF THE STRUCTURAL CONTRACT DOCUMENTS, STRUCTURAL DRAWINGS, GENERAL NOTES, AND SPECIFICATIONS, THE STRICTEST REQUIREMENTS, AS INDICATED BY THE ENGINEER, SHALL GOVERN.

K. PERIODIC SITE OBSERVATION BY FIELD REPRESENTATIVES OF JQ IS SOLELY FOR THE PURPOSE OF DETERMINING IF THE WORK IS PROCEEDING IN ACCORDANCE WITH THE STRUCTURAL CONTRACT DOCUMENTS. THIS LIMITED SITE OBSERVATION IS NOT INTENDED TO BE A CHECK OF THE QUALITY OR QUANTITY OF THE WORK, BUT RATHER A PERIODIC CHECK IN AN EFFORT TO INFORM THE OWNER AGAINST DEFECTS AND DEFICIENCIES IN THE WORK OF THE CONTRACTOR.

CODES:

A. THE GENERAL BUILDING CODE USED AS THE BASIS FOR THE STRUCTURAL DESIGN IS AS FOLLOWS:
   1. INTERNATIONAL BUILDING CODE, 2021 EDITION WITH CITY AMENDMENTS

B. STRUCTURAL CONCRETE: BUILDING CODE REQUIREMENTS FOR REINFORCED CONCRETE, AMERICAN CONCRETE INSTITUTE, ACI 318, AS REFERENCED BY THE GENERAL BUILDING CODE.

C. STRUCTURAL CONCRETE: CODE REQUIREMENTS FOR ENVIRONMENTAL ENGINEERING CONCRETE STRUCTURES, AMERICAN CONCRETE INSTITUTE, ACI 350.

D. CONCRETE MASONRY: BUILDING CODE REQUIREMENTS FOR MASONRY STRUCTURES, THE MASONRY SOCIETY, TMS 402/602.

E. STRUCTURAL STEEL: MANUAL OF STEEL CONSTRUCTION, AMERICAN INSTITUTE OF STEEL CONSTRUCTION INC., ANSI/AISC 360, AS REFERENCED BY THE GENERAL BUILDING CODE.

F. CODE OF FEDERAL REGULATIONS, OCCUPATIONAL SAFETY AND HEALTH ADMINISTRATION, LATEST EDITION.

G. ALUMINUM: ALUMINUM DESIGN MANUAL - SPECIFICATIONS AND GUIDELINES FOR ALUMINUM STRUCTURES, THE ALUMINUM ASSOCIATION.

H. GEOTECHNICAL REPORT: FOUNDATION ELEMENTS HAVE BEEN DESIGNED IN ACCORDANCE WITH INFORMATION PROVIDED IN THE FOLLOWING GEOTECHNICAL REPORT:

GEOTECHNICAL ENGINEER:	HVJ ASSOCIATES, INC.
REPORT NUMBER:	HGT260175
DATE:	JUNE 26, 2026

DESIGN LOADS:

A. DEAD LOADS INCLUDE THE SELF-WEIGHT OF THE STRUCTURAL ELEMENTS AND THE FOLLOWING SUPERIMPOSED LOADS:

1. CEILING AND MECHANICAL AT ROOF	10 PSF
2. CEILING AND MECHANICAL AT FLOORS	15 PSF
3. ACCESS FLOORING	15 PSF
4. MECHANICAL AT FLOORS	50 PSF

B. LIVE LOADS

OCCUPANCY OR USE	UNIFORM (PSF)	CONCENTRATED (LBS)
EQUIPMENT WEIGHTS:		
1. BLOWER UNIT		6,222
2. MOTOR		5,100
DRIVE LANE	HS25	20,000 WHEEL LOAD
ELECTRICAL ROOM	150	2,000 OR EQUIP WT
MECHANICAL ROOMS	150	2,000 OR EQUIP WT
RESTROOMS	60	2,000
ROOF - UNREDUCED	20	N/A
STAIRS AND EXISTS	100	300
STORAGE:		
1. LIGHT	125	N/A
2. HEAVY	250	

C. LIVE LOAD REDUCTION
   1. FLOOR OR ROOF LIVE LOAD HAVE NOT BEEN REDUCED.

D. WIND LOADS
   1. WIND LATERAL LOAD ON STRUCTURAL FRAME IS BASED ON ASCE 7 USING THE FOLLOWING:
      a. BASIC WIND SPEED 141 MPH
      b. EXPOSURE C
      c. INTERNAL PRESSURE COEFFICIENT, GCPI ± 0.18
      d. OCCUPANCY CATEGORY III
   2. COMPONENTS AND CLADDING WIND PRESSURES:
      a. BLOWER BUILDING

SURFACE	PSF	ZONE	AT (FT²) AREA
EXTERIOR WALLS	+24.2	INTERIOR AND EDGE	10 OR LESS
	-26.3	INTERIOR	10 OR LESS
	-32.3	EDGE	10 OR LESS
	+18.2	INTERIOR AND EDGE	500 OR GREATER
	-20.2	INTERIOR AND EDGE	500 OR GREATER
ROOF	-24.2	INTERIOR	10 OR LESS
	-42.2	EDGES	10 OR LESS
	-62.4	CORNERS	10 OR LESS
	-22.0	INTERIOR	100 OR GREATER
	-48.9	EDGES AND CORNERS	100 OR GREATER
ROOF OVERHANG	-53.4	EDGES	100 OR GREATER
	-60.1	CORNER	100 OR GREATER

DESIGN LOADS: (CONT)

- PRESSURES FOR TRIBUTARY AREA IN BETWEEN THE LISTED VALUES MAY BE LINEARLY INTERPOLATED.
- NEGATIVE VALUE SIGNIFIES PRESSURE ACTING AWAY FROM THE SURFACE (SUCTION).
- EDGE AND CORNER ZONE DISTANCES SHALL BE DETERMINED IN ACCORDANCE WITH REFERENCED STANDARD.
- PRESSURES ON PARAPETS SHALL BE DETERMINED BY COMBINING POSITIVE AND NEGATIVE WALL PRESSURES OR WALL AND ROOF PRESSURES LISTED ABOVE IN ACCORDANCE WITH THE REFERENCED STANDARD.
- PRESSURES ARE FOR GROSS UPLIFT CONDITIONS. REFER TO ROOF PLAN(S) FOR NET UPLIFT VALUES FOR DESIGN OF JOISTS, JOIST GIRDERS, AND BRIDGING.

F. SEISMIC LOADS
   1. THE STRUCTURE AND STRUCTURAL COMPONENTS OF THE BUILDING HAVE BEEN DESIGNED IN ACCORDANCE WITH GENERAL BUILDING CODE WITH THE FOLLOWING CRITERIA:

a. SEISMIC IMPORTANCE FACTOR, IE	1.25
b. RISK CATEGORY	III
c. MAPPED SPECTRAL RESPONSE ACCELERATIONS	
• Ss (%g)	0.068
• S1 (%g)	0.039
d. SITE CLASS	D
e. SPECTRAL RESPONSE COEFFICIENTS	
• SDS	0.072
• SD1	0.063
f. SEISMIC DESIGN CATEGORY	A
g. BASIC SEISMIC-FORCE-RESISTING SYSTEM	STEEL CBF
h. DESIGN BASE SHEAR, V	20 KIPS
i. SEISMIC RESPONSE COEFFICIENT(S), CS	0.030
j. RESPONSE MODIFICATION FACTOR(S), R	3

G. MECHANICAL EQUIPMENT LOADS:
   1. LOADING FOR MECHANICAL ROOMS ARE BASED ON THE WEIGHTS OF EQUIPMENT AND CONCRETE PADS AS INDICATED ON THE STRUCTURAL DRAWINGS. THE CONTRACTOR SHALL SUBMIT ACTUAL WEIGHTS OF EQUIPMENT TO BE USED IN THE PROJECT TO THE STRUCTURAL ENGINEER FOR VERIFICATION OF LOADS USED IN THE DESIGN AT LEAST THREE WEEKS PRIOR TO FABRICATION AND CONSTRUCTION OF THE SUPPORTING STRUCTURE. ANY REVISIONS IN EQUIPMENT TYPE, SIZE, OR QUANTITY SHALL BE REPORTED TO THE ENGINEER IMMEDIATELY FOR VERIFICATION OF THE STRUCTURAL DESIGN.

H. RAILINGS AND GUARDRAILS:
   1. ALL RAILINGS AND GUARDRAILS SHALL BE DESIGNED FOR 50 POUNDS/FT LOAD APPLIED HORIZONTALLY AT RIGHT ANGLES TO THE TOP RAIL OR A 200 POUND CONCENTRATED LOAD APPLIED IN ANY DIRECTION AT ANY POINT ALONG THE TOP RAIL, WHICHEVER IS GREATER. THE RAILING SHALL HAVE ATTACHMENT DEVICES TO ADEQUATELY ANCHOR TO THE SUPPORTING STRUCTURE FOR THE LOADING INDICATED. INTERMEDIATE RAILS AND PANEL FILLERS SHALL BE DESIGNED TO WITHSTAND A HORIZONTALLY APPLIED NORMAL LOAD OF 50 POUNDS ON AN AREA NOT TO EXCEED 12-INCHES BY 12-INCHES INCLUDING OPENINGS AND SPACE BETWEEN RAILS AND LOCATED SO AS TO PRODUCE THE MAXIMUM LOAD EFFECT. RESULTING REACTIONS DUE TO THESE LOADS NEED NOT BE COMBINED WITH THE DESIGN LOADS FOR HANDRAILS OR GUARDRAILS.

EXCAVATION PROTECTION:

A. THE SIDES OF ALL EXCAVATIONS GREATER THAN 5'-0" IN DEPTH SHALL BE LAID BACK TO A SLOPE OF 1.5 HORIZONTAL TO 1 VERTICAL, UNLESS THE FOLLOWING APPLIES:

1. A STEEPER SLOPE IS ALLOWED BY THE GEOTECHNICAL ENGINEER FOR THE PARTICULAR LOCATION AND SITE CONDITIONS IN QUESTION.
2. A TEMPORARY RETENTION SYSTEM IS INDICATED ON THE STRUCTURAL DRAWINGS.
3. AN ALTERNATIVE PROTECTIVE SYSTEM IS SUBMITTED BY THE CONTRACTOR AND ALLOWED BY THE OWNER.

B. CONTRACTOR SHALL SUBMIT DRAWINGS AND CALCULATIONS SEALED BY A REGISTERED ENGINEER LICENSED IN THE STATE HAVING JURISDICTION AT THE PROJECT SITE FOR THE DESIGN OF ANY TEMPORARY RETENTION OR ALTERNATIVE PROTECTIVE SYSTEMS. TEMPORARY RETENTION OR ALTERNATIVE PROTECTIVE SYSTEMS SHALL BE DESIGNED TO RESIST THE SOIL PRESSURES STIPULATED IN THE REFERENCED GEOTECHNICAL REPORT. IN ADDITION, THE DESIGN SHALL CONSIDER SURCHARGES CREATED BY CONSTRUCTION EQUIPMENT, EXCAVATION SPOIL, AND OTHER SURFACE ENCUMBRANCES.

C. CONTRACTOR SHALL COMPLY WITH ALL OCCUPATIONAL SAFETY AND HEALTH ADMINISTRATION STANDARDS AND ALL OTHER REGULATORY AGENCY STANDARDS REGARDING EXCAVATION SAFETY.

PAD PREPARATION AND DEWATERING:

A. GIVEN THE DEPTH OF EXCAVATION AND ANTICIPATED GROUND WATER LEVELS, SIGNIFICANT LONG-TERM DEWATERING OPERATIONS ARE ANTICIPATED. THE CONTRACTOR SHALL SUBMIT A COMPLETE DEWATERING PLAN DESCRIBING MEANS AND METHODS USED FOR CONTROLLING WATER INFILTRATION OF THE EXCAVATIONS. DEWATERING SHALL BE IN ACCORDANCE WITH SPECIFICATION SECTION 02750.

B. THE WATER TABLE SHALL BE LOWERED TO A MINIMUM DEPTH OF 2 FEET BELOW THE PROPOSED EXCAVATION TO PREVENT EXCAVATION SANDS FROM BECOMING A "QUICK" CONDITION.

C. THE BEARING STRATUM IS SANDY SILTY CLAY/SILTY CLAY.

D. EXCAVATE TO 4 INCHES BELOW THE BASE OF THE LOWEST MAT FOUNDATION SLAB LEVEL. EXTEND THE EXCAVATION A MINIMUM OF 3 FEET BEYOND THE EDGE OF THE MAT SLAB.

E. PLACE A LEAN CONCRETE MUD SLAB, 4 INCHES THICK OVER THE EXCAVATED SUBGRADE WITHIN 24 HOURS OF EXPOSING THE SUBGRADE.

F. THE EXPOSED BOTTOM OF EXCAVATION SHOULD BE OBSERVED BY A QUALIFIED, OWNER APPROVED GEOTECHNICAL ENGINEER TO CONFIRM THAT THE BEARING STRATUM IS CONSISTENT WITH THE DESIGN ASSUMPTIONS.

G. THE ABOVE RECOMMENDATIONS HAVE BEEN PREPARED IN ACCORDANCE WITH THE REFERENCED GEOTECHNICAL REPORT.

NO.	DATE	REVISION	APP.

JQ-IMEG 100 GLASS STREET SUITE 202 DALLAS, TX 75207 P: 972.392.7340 TBPELS FIRM F-26651
PROJECT NUMBER : 26021466.00

JQ-IMEG RESERVES PROPRIETARY RIGHTS, INCLUDING COPYRIGHTS, TO THIS DRAWING AND THE DATA SHOWN THEREON. SAID DRAWING AND/OR DATA ARE THE EXCLUSIVE PROPERTY OF JQ-IMEG AND SHALL NOT BE USED OR REPRODUCED FOR ANY OTHER PROJECT WITHOUT THE EXPRESS WRITTEN APPROVAL AND PARTICIPATION OF JQ-IMEG. ©2026 JQ-IMEG LLC

MBROH ENGINEERING 20
11757 KATY FWY,
SUITE 625
HOUSTON, TX 77077
713-468-2545

SURVEYED BY:
FB NO.

INTERIM REVIEW DOCUMENTS
(NOT INTENDED FOR BIDDING, PERMIT OR CONSTRUCTION PURPOSES)

JOHN D. MISCHKOT
TEXAS REGISTRATION No: 107566
DATE: 11/02/2026

CITY OF HOUSTON
HOUSTON PUBLIC WORKS

WHITE OAKS WWTP IMPROVEMENTS

STRUCTURAL

STRUCTURAL NOTES I

WBS NUMBER	FOR CITY OF HOUSTON USE ONLY
R-000265-0158-3	
DRAWING SCALE	
3/4" = 1'-0"	
CITY OF HOUSTON, PM	
SHAHIDUR RAHMAN, PE	
SHEET NO. 37 OF 189	

S-01

Autodesk Docs://White Oaks Wastewater Treatment Plant Improvements/25004152.01_COH WHITE OAK_Improvements_Ex AB_R25.rvt

S T R U C T U R A L N O T E S

11/1/2026 10:53:57 PM

CONTROLLED BACKFILL BEHIND BELOW GRADE WALLS & RETAINING WALLS:

A. BACKFILL SHALL BE SELECT BACKFILL AND SHALL CONSIST OF CLAYEY SAND AND/OR SANDY CLAY MATERIAL.

B. BACKFILL MATERIAL SHALL HAVE A PLASTICITY INDEX BETWEEN 8 AND 20 WITH A LIQUID LIMIT LESS THAN 40.

C. FILL SHALL BE PLACED IN LIFTS NOT TO EXCEED 8".

D. FILL SHALL BE COMPACTED AT THE OPTIMUM MOISTURE CONTENT (-3% TO + 3%) TO AT LEAST 95 PERCENT OF THE MAXIMUM DRY DENSITY PER ASTM D698.

E. COMPACTION AND MOISTURE CONTENT OF CONTROLLED BACKFILL SHALL BE VERIFIED BY AN INDEPENDENT TESTING LABORATORY.

F. THE TOP TWO (2) FEET OF MATERIAL BELOW THE GROUND SURFACE SHALL CONSIST OF RELATIVELY IMPERVIOUS MATERIAL, WITH A LIQUID LIMIT BETWEEN 40 AND 50 PERCENT AND A PLASTICITY INDEX BETWEEN 20 AND 30. THIS MATERIAL SHALL BE PLACED IN 6" LIFTS AND COMPACTED AT OPTIMUM MOISTURE CONTENT, TO 95 PERCENT OF THE MAXIMUM DENSITY PER ASTM D698.

G. BACKFILL MATERIAL SHALL NOT BE PLACED AGAINST FOUNDATION WALLS UNTIL ALL SUPPORTING SLABS, BEAMS, STRUTS, ETC., HAVE ATTAINED THEIR 28 DAY DESIGN STRENGTH UNLESS PROPER BRACING IS INSTALLED.

H. WHERE BACKFILL IS REQUIRED ON BOTH SIDES OF A STRUCTURE OR BUILDING ELEMENT, BACKFILL SHALL BE PLACED SIMULTANEOUSLY ALONG BOTH SIDES SO THAT THE BACKFILL HEIGHT ON ONE SIDE DOES NOT EXCEED THE HEIGHT ON THE OPPOSITE SIDE BY MORE THAN 4'-0".

I. COMPACTION AND MOISTURE CONTENT OF SUBGRADE AND EACH LIFT OF STRUCTURAL FILL SHALL BE INSPECTED AND APPROVED BY A QUALIFIED ENGINEERING TECHNICIAN, SUPERVISED BY A GEOTECHNICAL ENGINEER.

J. DESIGN OF BELOW GRADE WALLS IS BASED ON EQUIVALENT HYDROSTATIC PRESSURES OF 100 PCF, ASSUMING BACKFILL OR SELECT FILL IS UNDRAINED.

K. DESIGN OF RETAINING WALLS IS BASED ON EQUIVALENT HYDROSTATIC PRESSURES OF 90 PCF, ASSUMING SELECT FILL AND USE OF PERFORATED DRAIN PIPE.

L. THE ABOVE RECOMMENDATIONS HAVE BEEN PREPARED IN ACCORDANCE WITH THE REFERENCED GEOTECHNICAL REPORT.

DRILLED PIERS:

A. PIER DESIGN IS BASED ON THE FOLLOWING DESIGN CRITERIA:
1. ALLOWABLE END BEARING (BLOWER BLDG): 6,000 PSF (DL + LL SUSTAINED)
2. ALLOWABLE END BEARING (BLOWER BLDG): 9,000 PSF (NET TOTAL LOAD)
3. RECOMMENDED DEPTH BELOW EX GRADE (BLOWER BLDG): 12 TO 14 FEET
4. ALLOWABLE END BEARING (GENERATOR): 3,000 PSF (DL + LL SUSTAINED)
5. ALLOWABLE END BEARING (GENERATOR): 4,500 PSF (NET TOTAL LOAD)
6. RECOMMENDED DEPTH BELOW EX GRADE (GENERATOR): 8 TO 10 FEET
7. BELL TO SHAFT RATIO: 2:1 TO 3:1
8. MINIMUM CLEARANCE: ONE BELL DIA

B. PIER DESIGN IS IN ACCORDANCE WITH THE RECOMMENDATIONS IN THE REFERENCED GEOTECHNICAL REPORT.

C. BEARING STRATUM SHOWN ON THE PIER DETAILS IS VERY STIFF TO HARD SANDY LEAN CLAY (CL).

D. PIERS NOT SPECIFICALLY LOCATED ON THE PLAN SHALL BE LOCATED ON CENTERLINE OF COLUMN ABOVE. WHERE NO COLUMN OCCURS, LOCATE ON CENTERLINE OF WALL OR BEAM.

E. PROVIDE DOWELS FROM PIERS INTO CONCRETE ABOVE USING SAME BAR SIZE AND NUMBER AS SHOWN FOR PILASTER ABOVE. WHERE NO PILASTER OCCURS, USE DOWELS OF SAME SIZE AND NUMBER AS PIER REINFORCING STEEL. EXTEND DOWELS 30 BAR DIAMETERS INTO PIER AND BEAM, WALL, PILASTER OR COLUMN, UNLESS NOTED OTHERWISE ON THE STRUCTURAL DRAWINGS.

F. ELEVATION OF TOP OF PIERS, UNLESS NOTED OTHERWISE ON THE STRUCTURAL DRAWINGS, IS AT THE BOTTOM OF THE DEEPEST INTERSECTING BEAM OR WALL SUPPORTED BY THE PIER.

G. REINFORCING CAGE SHALL BE HELD SECURELY AWAY FROM EARTH AT SIDES AND BOTTOM BY SETS OF 3 SPACERS AT A MAXIMUM SPACING OF 8 FT. ALONG THE LENGTH OF THE CAGE AND 1'-0" FROM THE BOTTOM.

H. PIER REINFORCING AND CONCRETE SHALL BE PLACED IMMEDIATELY AFTER DRILLING OPERATIONS ARE COMPLETE; IN NO CASE SHALL A PIER BE DRILLED THAT CANNOT BE PLACED BY THE END OF THE WORKDAY.

I. SEE PLANS FOR PIER SIZES, REINFORCING, AND DEPTH.

J. THE CONTRACTOR SHALL VERIFY DEPTHS OF PIERS BEFORE PIER STEEL IS CUT. PIER STEEL MAY BE DELIVERED TO THE JOBSITE IN STANDARD LENGTHS AND CUT AS REQUIRED. PROVIDE 64 BAR DIAMETER LAPS IN ALL VERTICAL PIER REINFORCING.

K. REINFORCING STEEL SHOP DRAWINGS SHALL INCLUDE PLACING DRAWINGS FOR TEMPLATES TO SET DOWELS IN PIERS.

DRILLED PIERS: (CONT)

L. TOP OF PIER SHALL BE OF THE SPECIFIED DIAMETER. FORM TOP OF PIER IF REQUIRED TO MAINTAIN THE SPECIFIED DIAMETER. ANY CONCRETE EXTENDING BEYOND THE SPECIFIED DIAMETER SHALL BE REMOVED.

M. TEMPORARY STEEL CASING MAY BE REQUIRED DURING PIER DRILLING OPERATIONS. PRIOR TO THE PLACEMENT OF CONCRETE, ANY SEEPAGE WATER SHALL BE REMOVED FROM THE PIER HOLES. SPECIAL CONSTRUCTION PROCEDURES IN ACCORDANCE WITH ACI 336.1 AND ACI 336.3R AND SPECIFICATIONS SHALL BE FOLLOWED DURING EXTRACTION OF THE CASING AND DURING CONCRETE PLACEMENT.

N. CONTRACTOR SHALL INCLUDE IN BID DOCUMENTS, UNIT-COSTS FOR CASING IF REQUIRED AND UNIT-COST FOR GREATER AND LESSER DEPTH OF DRILLING FOR EACH PIER SIZE.

O. ALL PIERS SHALL BE INSPECTED BY A REPRESENTATIVE OF [XX] IN ORDER TO ENSURE THAT THE PROPOSED BEARING MATERIAL HAS BEEN REACHED IN ACCORDANCE WITH THE RECOMMENDATIONS GIVEN IN THE GEOTECHNICAL REPORT.

P. THE CONTRACTOR SHALL MAKE AND MAINTAIN ACCURATE RECORDS OF THE DRILLED PIER DEPTHS, BEARING STRATUM, DEPTH OF PENETRATION INTO BEARING STRATUM, DIAMETER AND LOCATION (INCLUDING OFF CENTER ECCENTRICITIES), AND SHALL SUBMIT THIS INFORMATION TO THE ENGINEER.

CAST-IN-PLACE CONCRETE:

A. CLASSES OF CONCRETE
1. ALL CONCRETE SHALL CONFORM TO THE REQUIREMENTS AS SPECIFIED IN THE TABLE BELOW, UNLESS NOTED OTHERWISE ON THE STRUCTURAL DRAWINGS:

CLASS	28 DAY STRENGTH	USE
A	4,000 PSI	TYPICAL STRUCTURE, SEE SPEC 03300
B	3,000 PSI	SEE SPEC 03300
C	2,000 PSI	SEE SPEC 03300
D	350 PSI	SEE SPEC 03300

B. HORIZONTAL CONSTRUCTION JOINTS IN CONCRETE PLACEMENTS SHALL BE PERMITTED ONLY WHERE INDICATED ON THE STRUCTURAL DRAWINGS. ALL VERTICAL CONSTRUCTION JOINTS SHALL BE MADE IN THE CENTER OF SPANS IN ACCORDANCE WITH THE TYPICAL DETAILS. CONTRACTOR SHALL SUBMIT PROPOSED LOCATIONS FOR CONSTRUCTION JOINTS NOT SHOWN ON THE STRUCTURAL DRAWINGS FOR REVIEW BY THE ARCHITECT AND ENGINEER. ADDITIONAL CONSTRUCTION JOINTS MAY REQUIRE ADDITIONAL REINFORCING AS SPECIFIED BY THE ENGINEER WHICH SHALL BE PROVIDED BY THE CONTRACTOR AT NO ADDITIONAL COST TO THE OWNER.

C. EMBEDDED CONDUITS, PIPES, AND SLEEVES SHALL MEET THE REQUIREMENTS OF ACI 318, INCLUDING THE FOLLOWING:
1. CONDUITS AND PIPES EMBEDDED WITHIN A SLAB, WALL, OR BEAM (OTHER THAN THOSE PASSING THROUGH) SHALL NOT BE LARGER IN OUTSIDE DIMENSION THAN 1/3 THE OVERALL THICKNESS OF THE SLAB, WALL OR BEAM IN WHICH THEY ARE EMBEDDED.
2. CONDUITS, PIPES AND SLEEVES SHALL NOT BE SPACED CLOSER THAN THREE DIAMETERS OR WIDTHS ON CENTER.

D. CONCRETE PLACEMENTS SHALL NOT EXCEED 5,000 SQUARE FEET OR 100 LINEAR FEET ON EACH SIDE WITHOUT PRIOR APPROVAL BY THE ARCHITECT FOR EACH PLACEMENT.

E. GRADE BEAMS IN CONTACT WITH EARTH SHALL BE FORMED BOTH SIDES UNLESS NOTED OTHERWISE IN DETAILS.

F. REFER TO SPECIFICATION SECTION 03300 FOR ADDITIONAL INFORMATION.

CONCRETE REINFORCING:

A. CONCRETE REINFORCEMENT FOR THE PROJECT SHALL CONFORM TO THE FOLLOWING:
1. ALL REINFORCING STEEL SHALL BE NEW BILLET STEEL IN ACCORDANCE WITH ASTM A615, GRADE 60, UNLESS NOTED OTHERWISE IN THE STRUCTURAL DRAWINGS OR THESE NOTES.
2. WELDED REINFORCING STEEL. PROVIDE REINFORCING STEEL CONFORMING TO ASTM A706.
3. DEFORMED BAR ANCHORS. ASTM A496 MINIMUM YIELD STRENGTH 70,000 PSI AS NOTED ON THE STRUCTURAL DRAWINGS. REINFORCING BARS SHALL NOT BE SUBSTITUTED FOR DEFORMED BAR ANCHORS.

B. DETAILING OF REINFORCING STEEL SHALL CONFORM TO THE AMERICAN CONCRETE INSTITUTE 315 DETAILING MANUAL AND ALL HOOKS AND BENDS IN REINFORCING BARS SHALL CONFORM TO ACI DETAILING STANDARDS, UNLESS NOTED OTHERWISE ON THE STRUCTURAL DRAWINGS.

C. IN UNSCHEDULED GRADE BEAMS, WALLS, AND SLABS, DETAIL REINFORCING AS FOLLOWS:
1. CLASS A LAP BEAM TOP REINFORCING BARS AT MID SPAN.
2. CLASS A LAP BEAM BOTTOM REINFORCING BARS AT THE SUPPORTS.
3. PROVIDE CLASS B LAP AT OTHER LOCATION PENDING ENGINEER'S APPROVAL.
4. PROVIDE STANDARD HOOKS IN TOP BARS AT CANTILEVER AND DISCONTINUOUS ENDS OF BEAMS, WALLS AND SLABS.
5. PROVIDE CORNER BARS FOR ALL HORIZONTAL BARS AT THE INSIDE AND OUTSIDE FACES OF INTERSECTING BEAMS OR WALLS. CORNER BARS ARE NOT REQUIRED IF HORIZONTAL BARS ARE HOOKED.
6. PROVIDE 2-#4 DIAGONAL BARS AT ALL SLAB RE-ENTRANT CORNERS PLACED UNDER THE TOP MAT OF STEEL.

D. WELDING OF REINFORCING STEEL WILL NOT BE PERMITTED UNLESS SPECIFICALLY SHOWN ON THE STRUCTURAL DRAWINGS.

E. HEAT SHALL NOT BE USED IN THE FABRICATION OR INSTALLATION OF REINFORCEMENT.

F. REINFORCING STEEL CLEAR COVER SHALL BE AS FOLLOWS:

1. WALLS	2" TYP
2. BEAMS	1 1/2" INT, 2" EXT EXPOSURE
3. COLUMNS	1 1/2" INT, 2" EXT EXPOSURE
4. DRILLED PIERS	3"
5. FOOTINGS	3"
6. FORMED GRADE BEAMS	1 1/2" TOP, 3" SIDES, 3" BOTTOM
7. SLAB-ON-GRADE	2" TOP, 2" SIDES, 2" BOTTOM
8. SLAB-ON-VOID	2" TOP, 2" SIDES, 2" BOTTOM

a. "EXTERIOR EXPOSURE" REFERS TO CONCRETE EXPOSED TO EARTH OR WEATHER

G. SUBMITTAL: SUBMIT SHOP DRAWINGS FOR FABRICATION, BENDING, AND PLACEMENT OF CONCRETE REINFORCEMENT. COMPLY WITH ACI 315 "DETAILS AND DETAILING OF CONCRETE REINFORCEMENT". DO NOT REPRODUCE THE STRUCTURAL DRAWINGS FOR USE AS SHOP DRAWINGS.

H. REFER TO SPECIFICATION SECTION 03200 FOR ADDITIONAL INFORMATION.

STRUCTURAL MASONRY:

A. MINIMUM COMPRESSIVE STRENGTH OF THE MASONRY (f'm) SHALL BE 2,000 POUNDS PER SQUARE INCH.

B. MORTAR SHALL CONFORM TO ASTM C270, TYPE S. MASONRY CEMENT SHALL NOT BE USED.

C. CONCRETE MASONRY UNITS SHALL BE NORMAL WEIGHT HOLLOW LOAD BEARING UNITS WHICH CONFORM TO ASTM C90, WITH A MINIMUM NET COMPRESSIVE STRENGTH AS FOLLOWS:

f'm (PSI)	NET AREA COMPRESSIVE STRENGTH OF CMU BLOCK (PSI)
2000	2000

D. CHASES SHALL BE BUILT IN AND NOT CUT IN. CHASES SHALL BE PLUMB AND SHALL BE MINIMUM ONE-UNIT LENGTH FROM JAMBS OF OPENINGS. ANCHORS, WALL PLUGS, ACCESSORIES AND OTHER ITEMS TO BE BUILT IN SHALL BE INSTALLED AS THE MASONRY WORK PROGRESSES. ALL CUTTING AND FITTING OF MASONRY, INCLUDING THAT REQUIRED TO ACCOMMODATE THE WORK OF OTHER SECTIONS SHALL BE DONE BY MASONS WITH MASONRY SAWS.

E. COARSE GROUT SHALL CONFORM TO ASTM C476, WITH A MAXIMUM AGGREGATE SIZE OF 1/2" AND A MINIMUM COMPRESSIVE STRENGTH EQUAL TO THE SPECIFIED MINIMUM COMPRESSIVE STRENGTH, f'm, BUT NOT LESS THAN 2000 PSI. COURSE GROUT SHALL BE PLACED IN ACCORDANCE WITH TMS 602.

F. REINFORCE CONCRETE MASONRY UNIT JOINTS WITH LADDER TYPE HOT DIP GALVANIZED COLD-DRAWN STEEL CONFORMING TO ASTM A951, WITH W1.7 SIDE RODS WITH W1.7 CROSS RODS.
1. SPACE JOINT REINFORCING AT 16 INCHES O.C. UNLESS NOTED OTHERWISE.
2. LAP JOINT REINFORCING 14 INCHES AT SPLICES.
3. PROVIDE PREFABRICATED JOINT REINFORCING CORNER PIECES AT ALL WALL CORNERS AND INTERSECTIONS.
4. JOINT REINFORCING SHALL BE DISCONTINUOUS AT CONTROL AND EXPANSION JOINTS.

G. LAP REINFORCING BARS IN GROUTED MASONRY AS NOTED BELOW. SPLICES IN REINFORCING SHALL BE STAGGERED SO THAT NOT MORE THAN 1/2 OF ALL BARS ARE SPLICED AT THE SAME LOCATION.

1. VERTICAL BARS:	60 BAR DIAMETERS
2. BOND BEAMS:	40 BAR DIAMETERS
3. LINTEL:	DO NOT SPLICE

H. REFER TO SPECIFICATION SECTION 04 22 00 FOR ADDITIONAL INFORMATION.

STRUCTURAL STEEL:

A. MATERIAL
1. ALL HOT ROLLED STEEL MEMBERS SHALL BE NEW AND CONFORM TO ASTM SPECIFICATION A6.
2. ASTM SPECIFICATION AND GRADE - CLEARLY MARK THE GRADE ON EACH MEMBER.
3. UNLESS NOTED OTHERWISE ON THE STRUCTURAL DRAWINGS, STRUCTURAL MEMBERS SHALL BE:
   a. W-SHAPES SHALL CONFORM TO ASTM A992.
   b. CHANNELS SHALL CONFORM TO ASTM A36.
   c. ANGLES SHALL CONFORM TO ASTM A36.
   d. STEEP PIPE SHALL CONFORM TO ASTM A53, TYPE E OR S, GRADE B.
   e. ROUND HOLLOW STRUCTURAL SHAPE MEMBERS SHALL CONFORM TO ASTM 500, GRADE B Fy = 42 KSI.
   f. SQUARE OR RECTANGULAR HOLLOW STRUCTURAL SHAPE MEMBERS SHALL CONFORM TO ASTM 500 GRADE B, Fy = 46 KSI.
   g. STRUCTURAL STEEL PLATE SHALL CONFORM TO ASTM A36.
   h. ANY OTHER STEEL SHALL CONFORM TO ASTM A36.
   i. HEADED STUD SHEAR CONNECTORS SHALL CONFORM TO ASTM A108.

B. FABRICATION
1. SPLICING OF STRUCTURAL STEEL MEMBERS IS PROHIBITED WITHOUT PRIOR APPROVAL OF THE ENGINEER AS TO LOCATION AND TYPE OF SPLICE TO BE MADE. ANY MEMBER HAVING SPLICE NOT SHOWN AND DETAILED ON SHOP DRAWINGS WILL BE REJECTED.

C. ERECTION
1. ERECTION TOLERANCES OF ANCHOR BOLTS, EMBEDDED ITEMS, AND ALL STRUCTURAL STEEL UNLESS SPECIFIED OTHERWISE ON THE STRUCTURAL DRAWINGS SHALL CONFORM TO THE AISC CODE OF STANDARD PRACTICE.
2. FIELD CUTTING OF STRUCTURAL STEEL OR ANY FIELD MODIFICATIONS TO STRUCTURAL STEEL SHALL NOT BE MADE WITHOUT PRIOR APPROVAL OF THE ENGINEER.
3. CONTRACTOR SHALL PROTECT ANY UNPRIMED STRUCTURAL STEEL FROM DETRIMENTAL EFFECTS OF CORROSION, AS REQUIRED, UNTIL THE STEEL IS ENCLOSED AND PROTECTED BY THE NEW CONSTRUCTION.
4. HOT DIP GALVANIZE AFTER FABRICATION ALL STRUCTURAL STEEL ITEMS AND CONNECTIONS PERMANENTLY EXPOSED TO THE WEATHER, WHETHER SPECIFIED ON THE STRUCTURAL DRAWINGS OR NOT. SUCH ITEMS INCLUDE, BUT ARE NOT LIMITED TO:
   a. SHELF ANGLES
   b. PARAPET WALL SUPPORTING MEMBERS
   c. ALL EMBEDDED PLATES IN CONCRETE
   d. BUILDING CLADDING SUPPORT STEEL IN SPACE NOT AIR CONDITIONED AND/OR EXPOSED TO MOISTURE OUTSIDE THE EXTERIOR WATERPROOFING SURFACE IF ANY.
   e. RAILING EXPOSED TO WEATHER
   f. EXAMINE THE ARCHITECTURAL AND STRUCTURAL DRAWINGS FOR OTHER ITEMS REQUIRED TO BE HOT DIPPED GALVANIZED. GALVANIZE ALL NUTS, BOLTS, AND WASHERS USED IN CONNECTION WITH SUCH STEEL. FIELD WELDED CONNECTIONS SHALL HAVE WELDS PROTECTED WITH "Z.R.C. COLD GALVANIZING COMPOUND" AS MANUFACTURED BY Z.R.C. COMPANY.

D. REFER TO SPECIFICATION SECTION 05120 FOR ADDITIONAL INFORMATION.

NO.	DATE	REVISION	APP.

JQ-IMEG
100 GLASS STREET
SUITE 202
DALLAS, TX 75207
P: 972.392.7340
TBPELS FIRM F-26651
PROJECT NUMBER : 26021466.00

JQ-IMEG RESERVES PROPRIETARY RIGHTS, INCLUDING COPYRIGHTS, TO THIS DRAWING AND THE DATA SHOWN THEREON. SAID DRAWING AND/OR DATA ARE THE EXCLUSIVE PROPERTY OF JQ-IMEG AND SHALL NOT BE USED OR REPRODUCED FOR ANY OTHER PROJECT WITHOUT THE EXPRESS WRITTEN APPROVAL AND PARTICIPATION OF JQ-IMEG. ©2026 JQ-IMEG LLC

MBROH ENGINEERING 20
11757 KATY FWY,
SUITE 625
HOUSTON, TX 77077
713-468-2545

INTERIM REVIEW DOCUMENTS
(NOT INTENDED FOR BIDDING, PERMIT OR CONSTRUCTION PURPOSES)
JOHN D. MISCHKOT
TEXAS REGISTRATION No: 107566
DATE: 11/02/2026

SURVEYED BY:
FB NO.

CITY OF HOUSTON
HOUSTON PUBLIC WORKS

WHITE OAKS
WWTP IMPROVEMENTS
STRUCTURAL
STRUCTURAL NOTES II

WBS NUMBER	FOR CITY OF HOUSTON USE ONLY
R-000265-0158-3	
DRAWING SCALE	
3/4" = 1'-0"	
CITY OF HOUSTON, PM	
SHAHIDUR RAHMAN, PE	
SHEET NO. 38 OF 189	

S-02

Autodesk Docs://White Oaks Wastewater Treatment Plant Improvements/25004152.01_COH WHITE OAK_Improvements_Ex AB_R25.rvt

S T R U C T U R A L N O T E S

11/1/2026 10:53:57 PM

STRUCTURAL STEEL CONNECTIONS:

A. WELDED CONNECTIONS
   1. ALL WELDING SHALL CONFORM TO ANSI/AWS D1.1, LATEST EDITION.
   2. FILLET WELDS WITH NO SIZE SPECIFIED SHALL BE 3/16 INCH OR MINIMUM SIZE REQUIRED BY AISC, WHICHEVER IS LARGER.

B. BOLTED CONNECTIONS
   1. UNLESS NOTED OTHERWISE ON THE STRUCTURAL DRAWINGS, BOLTS SHALL BE 3/4 INCH DIAMETER AND CONFORM TO ASTM A325. BOLTS SHALL BE DESIGNED USING VALUES FOR BEARING TYPE BOLTS WITH THREAD ALLOWED IN THE SHEAR PLANE.

C. STRUCTURAL STEEL CONNECTIONS NOT SPECIFICALLY DETAILED ON THE STRUCTURAL DRAWINGS SHALL BE DESIGNED AND DETAILED BY THE CONTRACTOR UNDER THE DIRECT SUPERVISION OF A PROFESSIONAL ENGINEER LICENSED IN THE STATE HAVING JURISDICTION AT THE PROJECT SITE. SEALED CALCULATIONS FOR ALL CONNECTIONS DESIGNED BY THE CONTRACTOR SHALL BE SUBMITTED FOR THE ARCHITECT'S FILES.

D. BEAM CONNECTIONS SHALL BE DESIGNED AND DETAILED AS FOLLOWS, UNLESS NOTED OTHERWISE ON THE STRUCTURAL DRAWINGS:
   1. CONNECTIONS SHALL BE AISC TYPE 2 SIMPLE FRAMING CONNECTIONS. SHEAR TAB CONNECTIONS SHALL NOT BE USED UNLESS SPECIFICALLY DETAILED ON THE STRUCTURAL DRAWINGS, OR CONNECTIONS ARE DESIGNED AND DETAILED BY THE FABRICATOR'S REGISTERED PROFESSIONAL ENGINEER LICENSED IN THE STATE OF [XX] AND SEALED CALCULATIONS ARE SUBMITTED.
   2. IN GENERAL, SHOP CONNECTIONS SHALL BE BOLTED OR WELDED AND FIELD CONNECTIONS SHALL BE BOLTED.
   3. IF NOT INDICATED ON THE STRUCTURAL DRAWINGS, CONNECTIONS SHALL BE DESIGNED FOR 55 PERCENT OF THE TOTAL LOAD CAPACITY FOR THE BEAM SPAN SHOWN IN THE BEAM TABLES IN THE AISC MANUAL REFERENCED IN THE "CODES & REFERENCED REPORTS" NOTES.
   4. SHORT SLOTTED HOLES SHALL BE PERMITTED PROVIDED WASHERS ARE INSTALLED IN ACCORDANCE WITH AISC REQUIREMENTS. WASHERS SHALL BE HARDENED WHERE A325 BOLTS ARE UTILIZED.

E. ALL BEAM SHEARS, REACTIONS, MEMBER FORCES, MOMENTS, ETC. SHOWN ON THE STRUCTURAL DRAWINGS ARE UNFACTORED LOADS CONFORMING TO THE REQUIREMENTS OF AISC ALLOWABLE STRESS DESIGN (ASD).

F. ROOF EDGE ANGLES SHALL BE CONTINUOUS AND SHALL BE SPLICED ONLY AT SUPPORTS. SPLICES SHALL BE BUTT WELDED TO DEVELOP FULL CAPACITY OF THE MEMBER.

G. BASE PLATES
   1. COLUMN BASE PLATES SHALL BE SET TO THE ELEVATION INDICATED ON THE STRUCTURAL DRAWINGS AND LEVELED USING SHIMS OR BY DOUBLE NUTS ON ANCHOR BOLTS. BASE PLATES SHALL THEN BE GROUTED WITH A NON-SHRINK, HIGH STRENGTH NONMETALLIC GROUT. TIGHTEN ANCHOR BOLTS AFTER SUPPORTED MEMBERS HAVE BEEN POSITIONED AND PLUMBED.
   2. HOLE SIZES IN BASE PLATES SHALL BE OVERSIZED WITH PLATE WASHERS PER AISC TABLE 14-2.

H. ANCHOR RODS SHALL BE:
   1. TYPICAL: ASTM F1554 GR. 55, WELDABLE.

I. FOR CONNECTIONS NOT SPECIFICALLY ADDRESSED BY THESE NOTES OR THE STRUCTURAL DRAWINGS, PROVIDE FILLET WELDS AT ALL CONTACT SURFACES SUFFICIENT TO DEVELOP THE TENSILE STRENGTH OF THE SMALLER MEMBER AT THE JOINT.

OPEN WEB JOISTS:

A. OPEN WEB STEEL JOISTS SHALL CONFORM TO THE STANDARD SPECIFICATIONS OF THE STEEL JOIST INSTITUTE (SJI). CHORDS OF JOISTS SHALL BE ANGLES OR TEES.

B. PROVIDE BRIDGING IN ACCORDANCE WITH SJI SPECIFICATIONS AND OSHA STANDARD 29 CFR-1926.757(C). BRIDGING SHALL BE CONTINUOUS THROUGH STRUCTURAL STEEL MEMBERS, AND SHALL BE ANCHORED TO SPANDREL MEMBERS OR WALLS. PROVIDE ADDITIONAL BRIDGING WHERE REQUIRED FOR UPLIFT.

C. SEE DESIGN LOADS SECTION OF THE STRUCTURAL NOTES FOR JOIST DESIGN WIND PRESSURES.

D. JOIST MANUFACTURER SHALL DESIGN CHORDS OF JOISTS TO SUPPORT A NOMINAL CONCENTRICALLY-APPLIED LOAD OF 100 POUNDS BETWEEN ALL PANEL POINTS WITHOUT REQUIRING ADDITIONAL REINFORCING. THIS ADDITIONAL LOAD HAS BEEN ACCOUNTED FOR IN THE OVERALL DESIGN LOADS AND IS NOT ADDITIVE TO THOSE SPECIFIED.

E. ALL HANGERS OR ATTACHMENTS TO JOISTS SHALL BE PLACED CONCENTRIC WITH THE TOP AND BOTTOM CHORD(S). HANGERS WITH REACTIONS IN EXCESS OF 100 POUNDS MUST BE LOCATED AT THE PANEL POINTS OF THE JOIST, OR THE CHORD(S) SHALL BE REINFORCED IN ACCORDANCE WITH THE "TYPICAL DETAILS."

F. PROVIDE FLAT BEARING FOR ALL JOISTS. BEAR JOISTS ON SUPPORTS IN ACCORDANCE WITH SJI SPECIFICATIONS.

G. JOISTS SHALL BE CONNECTED TO THEIR SUPPORTS IN ACCORDANCE WITH SJI SPECIFICATIONS AND AS INDICATED BY THE JOIST MANUFACTURER.

H. REFER TO SPECIFICATION SECTION 05210 FOR ADDITIONAL INFORMATION.

METAL DECKS:

A. METAL ROOF DECK
   1. METAL ROOF DECK SCHEDULE:

LOCATION	GAUGE	SDI DECK TYPE	DECK DEPTH (IN)	SHEET WIDTH (IN)	MIN Ix (IN⁴)	MIN Sp (IN³)	MIN Sn (IN³)
TYP UNO	20	WR	1.5	36	0.212	0.234	0.245

   Sp = POSITIVE SECTION MODULUS IN³
   Sn = NEGATIVE SECTION MODULUS IN³
   I = MOMENT OF INTERIA IN⁴

   2. ROOF DECK SHALL BE GALVANIZED.
   3. SHEET STEEL FOR GALVANIZED ROOD DECK AND ACCESSORIES SHALL CONFORM TO ASTM A653, STRUCTURAL QUALITY, WITH A MINIMUM YIELD STRENGTH OF 33 KSI. GALVANIZING SHALL CONFORM TO ASTM A653 WITH A MINIMUM COATING OF {G60 OR G90} AS DEFINED IN A653.
   4. ROOF DECK SHALL BE CONTINUOUS OVER FOUR OR MORE SUPPORTS.
   5. PLACE DECK PANELS ON STRUCTURAL SUPPORTS AND ADJUST TO FINAL POSITION WITH ENDS LAPPED 2 INCHES OVER STRUCTURAL SUPPORTS. PROVIDE MINIMUM END BEARING OF 2 INCHES.
   6. ROOF DECK CONNECTIONS SHALL BE AS FOLLOWS:

LOCATION	SUPPORT CONN PATTERN	SUPPORT FASTENER	SIDELAP FASTENER/NO PER SPAN
TYPICAL BUILDING:			
INTERIOR FIELD	36/4	5/8 PW	#10 TEK/2
PERIMETER BAND	36/7	5/8 PW	#10 TEK/3
CORNER ZONES	36/7	5/8 PW	#10 TEK/5

   SEE DESIGN WIND LOAD INFORMATION OR PLANS FOR "A" DIMENSION AND INTERIOR FIELDS, PERIMETER BAND, RIDGE BAND, AND CORNER ZONE WIND LOADS.
   PW = PUDDLE WELD
   7. POWER DRIVEN FASTENERS SHALL BE SELECTED BY THE CONTRACTOR FOR THE COMBINATIONS OF DECK GAUGE AND DECK SUPPORT MEMBER THICKNESS. SUBMIT PROPOSED FASTENERS WITH COMPLETE MANUFACTURER'S INFORMATION, INCLUDING DIAPHRAGM SHEAR VALUES FOR THE ENGINEER TO REVIEW.
   8. PUDDLE WELDS SHALL BE 5/8" MINIMUM DIAMETER AND SHALL BE MADE THROUGH WELD WASHERS FOR DECKING LIGHTER THAN 22 GAUGE.
   9. MECHANICAL, ELECTRICAL AND PLUMBING SYSTEMS SHALL NOT BE SUPPORTED BY THE METAL ROOF DECK.
   10. REFER TO SPECIFICATION SECTION 05300 FOR ADDITIONAL INFORMATION.

CEMENT STABILIZED SAND

A. PROVIDE A SAND-CEMENT MIXTURE TO PRODUCE A MINIMUM COMPRESSIVE STRENGTH OF 100 PSI IN 48 HOURS WHEN COMPACTED TO 95 PERCENT IN ACCORDANCE WITH ASTM D558 AND WHEN CURED IN ACCORDANCE WITH ASTM D1632, AND TESTED IN ACCORDANCE WITH ASTM D1633. COMPACT MIX WITH MOISTURE CONTENT ON THE DRY SIDE OF OPTIMUM.

B. MIX SHALL CONTAIN A MINIMUM OF 1-1/2 SACKS OF CEMENT PER CUBIC YARD.

C. CEMENT: TYPE I PORTLAND CEMENT CONFORMING TO ASTM C-150.

D. SAND: CLEAN, DURABLE SAND MEETING GRADING REQUIREMENTS FOR FINE AGGREGATES OF ASTM C33, AND THE FOLLOWING REQUIREMENTS:
   1. CLASSIFIED AS SW, SP, OR SM BY UNITED SOIL CLASSIFICATION SYSTEM OF ASTM D2487.
   2. DELETERIOUS MATERIALS:
      a. CLAY LUMPS, ASTM C142; LESS THAN 0.5 PERCENT
      b. LIGHTWEIGHT PIECES, ASTM C123; LESS THAN 0.5 PERCENT
      c. ORGANIC IMPURITIES, ASTM C40; COLOR NO DARKER THAN THE STANDARD COLOR.
   3. PLASTICITY INDEX OF 4 OR LESS WHEN TESTED IN ACCORDANCE WITH ASTM D4318.

E. WATER: POTABLE WATER, FREE OF OILS, ACIDS, ALKALIS, ORGANIC MATTER OR OTHER DELETERIOUS SUBSTANCES, MEETING THE REQUIREMENTS OF ASTM C94.

F. PLACE SAND-CEMENT MIXTURE IN 8-INCH THICK LOOSE LIFTS AND COMPACT TO 95 PERCENT OF ASTM D558. THE MOISTURE CONTENT DURING COMPACTION SHALL BE ON THE DRY SIDE OF OPTIMUM BUT SUFFICIENT FOR HYDRATION. PERFORM COMPLETE COMPACTION OF THE SAND-CEMENT MIXTURE WITHIN 4 HOURS AFTER ADDITION OF WATER TO THE MIX AT THE PLANT. MATERIAL NOT PLACED AND COMPACTED WITH 4 HOURS SHALL BE REJECTED.

G. DO NOT PLACE OR COMPACT SAND-CEMENT MIXTURE IN STANDING OR FREE WATER.

H. SUBMITTAL: SUBMIT PROPOSED MIX DESIGN ACCOMPANIED BY A RECORD OF PAST PERFORMANCE BASED ON AT LEAST 30 CONSECUTIVE STRENGTH TEST, OR BY THREE LABORATORY TRIAL MIXTURES WITH CONFIRMATION TESTS.

DESIGN BY OTHERS:

A. IN ACCORDANCE WITH THE SPECIFICATIONS THE ITEMS LISTED BELOW ARE NOT INCLUDED IN THE CONTRACT DOCUMENTS. DESIGN OF THESE ELEMENTS SHALL BE THE RESPONSIBILITY OF THE CONTRACTOR, AND SHALL BE DESIGNED AND SEALED BY A REGISTERED PROFESSIONAL ENGINEER LICENSED IN THE STATE HAVING JURISDICTION AT THE PROJECT SITE.
   1. STEEL CONNECTIONS
   2. METAL STAIRS
   3. METAL LADDERS
   4. GUARDRAIL AND HANDRAIL SYSTEM
   5. EMBEDDED ASSEMBLIES AND INSERTS, CLAMPS, HANGERS, TRAPEZES, UNISTRUT, ETC. FOR THE SUPPORT OF MEP SYSTEMS.
   6. EMBEDDED ASSEMBLIES, INSERTS, AND/OR HANGERS FOR FIRE SUPPRESSION SYSTEMS.
   7. EXCAVATION SUPPORT AND PROTECTION
   8. SPECIALTY RETENTION SYSTEMS

B. DESIGN OF THE ITEMS LISTED ABOVE SHALL BE IN ACCORDANCE WITH THE GENERAL BUILDING CODE, AND SHALL INCLUDE ALL ATTACHMENTS TO THE STRUCTURE.

CONTROLLED LOW STRENGTH MATERIAL (CLSM)

A. CLSM FILL SHALL BE OF THE EXCAVATABLE TYPE WHICH MUST ALLOW THE MATERIAL TO BE RE-EXCAVATED WITH CONVENTIONAL EXCAVATION EQUIPMENT.

B. CLSM MIX DESIGN SHALL HAVE THE FOLLOWING CHARACTERISTICS:
   a. COMPRESSIVE STRENGTH SHALL NOT EXCEED 300 PSI AT 90 DAYS.
   b. A SLUMP BETWEEN 6" AND 9"
   c. A MINIMUM CEMENT CONTENT OF 40 LB/CY AND A MAXIMUM OF 100 LB/CY.
   d. FLY ASH, IF USED, DOES NOT NEED TO CONFORM TO CLASS F OR C AS DESCRIBED IN ASTM C618.
   e. COARSE AGGREGATE SHALL NOT BE USED IN EXCAVATABLE CLSM.

C. SUBMIT PROPOSED MIX DESIGN FOR ENGINEER'S REVIEW A MINIMUM OF TWO WEEKS PRIOR TO STARTING CLSM MOCK-UP WORK.

D. MOCK-UP: CONTRACTOR SHALL PROVIDE A 4'-0" x 4'-0" MOCK TRIAL BATCH MOCK-UP TO DEMONSTRATE THE FLOWABILITY DURING PLACEMENT AND EXCAVATABILITY OF THE CLSM MATERIAL AFTER THE CURE. MOCK-UP SHALL BE CAST A MINIMUM OF 120 DAYS PRIOR TO ACTUAL PLACEMENT TO ALLOW CONCRETE CORES FOR VERIFICATION OF SPECIFIED MAXIMUM COMPRESSIVE STRENGTHS AND TO DEMONSTRATE EXCAVATABILITY.

E. MAKE ONE STRENGTH TEST (FOUR CYLINDERS) FOR THE APPROVED MIX DESIGN.
   a. FINAL APPROVAL OF MIX DESIGN IS CONTINGENT ON THE DEMONSTRATION OF EXCAVATABILITY AT 90-DAYS AFTER MOCK-UP IS CAST.

F. CLSM BACKFILL SHALL BE PLACED IN MAXIMUM 4'-0" LIFTS. EACH LIFT SHALL BE ALLOWED TO CURE PRIOR TO THE NEXT LIFT PLACEMENT. WHERE BACKFILL IS REQUIRED ON BOTH SIDES OF THE STRUCTURE, BACKFILL SHALL BE PLACED SIMULTANEOUSLY ON BOTH SIDES SO THAT BACKFILL HEIGHT ON ONE SIDE DOES NOT EXCEED THE HEIGHT ON THE OPPOSITE SIDE BY MORE THAN 4'-0".

G. CLSM BACKFILL SHALL NOT BE PLACED AGAINST FOUNDATION WALLS UNTIL ALL SUPPORTING WALLS, SLABS, BEAMS, STRUTS, AND OTHER UPPER-LEVEL FLOOR OR ROOF MEMBERS HAVE ATTAINED THEIR 28-DAY STRENGTH UNLESS PROPER BRACING IS DESIGNED AND INSTALLED BY THE CONTRACTOR.

H. REFER TO ACI COMMITTEE 229R-99 REPORT "CONTROLLED LOW STRENGTH MATERIALS" FOR ADDITIONAL INFORMATION.

NO.	DATE	REVISION	APP.

JQ-IMEG 100 GLASS STREET SUITE 202 DALLAS, TX 75207 P: 972.392.7340 TBPELS FIRM F-26651
PROJECT NUMBER : 26021466.00

JQ-IMEG RESERVES PROPRIETARY RIGHTS, INCLUDING COPYRIGHTS, TO THIS DOCUMENT AND ITS CONTENTS. THIS DOCUMENT IS THE EXCLUSIVE PROPERTY OF JQ-IMEG AND SHALL NOT BE USED OR REPRODUCED FOR ANY OTHER PROJECT WITHOUT THE EXPRESS WRITTEN APPROVAL AND PARTICIPATION OF JQ-IMEG. ©2026 JQ-IMEG LLC

MBROH 20 ENGINEERING
11757 KATY FWY,
SUITE 625
HOUSTON, TX 77077
713-468-2545

INTERIM REVIEW DOCUMENTS
(NOT INTENDED FOR BIDDING, PERMIT OR CONSTRUCTION PURPOSES)
JOHN D. MISCHKOT
TEXAS REGISTRATION No: 107566
DATE: 11/02/2026

SURVEYED BY:
FB NO.

CITY OF HOUSTON
HOUSTON PUBLIC WORKS

WHITE OAKS
WWTP IMPROVEMENTS
STRUCTURAL
STRUCTURAL NOTES III

WBS NUMBER	FOR CITY OF HOUSTON USE ONLY
R-000265-0158-3	
DRAWING SCALE	
3/4" = 1'-0"	
CITY OF HOUSTON, PM	
SHAHIDUR RAHMAN, PE	
SHEET NO. 39 OF 189	

S-03

Autodesk Docs://White Oaks Wastewater Treatment Plant Improvements/25004152.01_CoH WHITE OAK_Improvements_ExAB_R25.rvt

S T R U C T U R A L N O T E S

STRUCTURAL STAINLESS STEEL:

A. STRUCTURAL STAINLESS STEEL SHALL CONFORM TO THE FOLLOWING STANDARDS:
   1. SPECIFICATION FOR STRUCTURAL STAINLESS STEEL BUILDINGS, AISC 370-21.
   2. CODE OF STANDARD PRACTICE FOR STRUCTURAL STAINLESS STEEL BUILDINGS, AISC 313-21.

B. MATERIAL
   1. STRUCTURAL STAINLESS STEEL ALLOYS SHALL CONFORM TO THE FOLLOWING:
      a. 304 - UNS# S30400, MINIMUM Fy = 30 KSI, MINIMUM Fu = 75 KSI
      b. 304L - UNS# S30403, MINIMUM Fy = 25 KSI, MINIMUM Fu = 70 KSI
      c. 316 - UNS# S31600, MINIMUM Fy = 30 KSI, MINIMUM Fu = 75 KSI
      d. 316L - UNS# S31603, MINIMUM Fy = 25 KSI, MINIMUM Fu = 70 KSI
   2. UNLESS NOTED OTHERWISE ON THE STRUCTURAL DRAWINGS, STRUCTURAL STAINLESS STEEL ROLLED SHAPES, PLATES, AND BARS SHALL BE 316L.

C. FABRICATION
   1. SPLICING OF STRUCTURAL STEEL MEMBERS IS PROHIBITED WITHOUT PRIOR APPROVAL OF THE ENGINEER AS TO LOCATION AND TYPE OF SPLICE TO BE MADE. ANY MEMBER HAVING SPLICE NOT SHOWN AND DETAILED ON SHOP DRAWINGS WILL BE REJECTED.

D. ERECTION
   1. ERECTION TOLERANCES OF ANCHOR BOLTS, EMBEDDED ITEMS, AND ALL STRUCTURAL STEEL UNLESS SPECIFIED OTHERWISE ON THE STRUCTURAL DRAWINGS SHALL CONFORM TO THE AISC CODE OF STANDARD PRACTICE.
   2. FIELD CUTTING OF STRUCTURAL STAINLESS STEEL OR ANY FIELD MODIFICATIONS TO STRUCTURAL STAINLESS STEEL SHALL NOT BE MADE WITHOUT PRIOR APPROVAL OF THE ENGINEER.
   3. CONTRACTOR SHALL PROTECT STRUCTURAL STAINLESS STEEL FROM EXPOSURE TO DETRIMENTAL OR CORROSIVE CONDITIONS, AS REQUIRED, UNTIL THE STEEL IS ENCLOSED AND PROTECTED BY THE NEW CONSTRUCTION.

E. FINISH
   1. FINISHES AND SURFACE PREPARATIONS FOR STRUCTURAL STAINLESS STEEL SHALL CONFORM TO THE FOLLOWING:
      a. HOT ROLLED AND EXTRUDED STRUCTURAL SHAPES, BAR, AND FLAT BAR - ASTM A484.
      b. HOLLOW STRUCTURAL SECTIONS - ASTM A554
      c. PLATE, SHEET, AND STRIP - ASTM A480
   2. TYPICAL STRUCTURAL FRAMING, UNLESS NOTED OTHERWISE:
      a. CLASS A SURFACE PREPARATION.
      b. ABRASIVE BLASTED AND PICKLED
   3. TYPICAL PLATES, UNLESS NOTED OTHERWISE
      a. HOT ROLLED OR COLD ROLLED, ANNEALED OR HEAT TREATED, BLAST CLEANED, AND PICKLED.
   4. HANDRAILS, UNLESS NOTED OTHERWISE:
      a. CLASS C SURFACE PREPARATION.
      b. NO. 4 POLISHED FINISH, MINIMUM, AS SPECIFIED IN THE NAAMM METAL FINISHES MANUAL, AMP 500-06.
   5. ARCHITECTURALLY EXPOSED STRUCTURAL STAINLESS STEEL:
      a. CLASS C SURFACE PREPARATION WITH FINISH AS NOTED ON THE DRAWINGS.

F. CONNECTIONS
   1. WELDED CONNECTIONS
      a. ALL WELDING SHALL CONFORM TO ANSI/AWS D1.6, LATEST EDITION.
   2. BOLTED CONNECTIONS
      a. UNLESS OTHERWISE NOTED ON THE STRUCTURAL DRAWINGS STAINLESS STEEL BOLTS SHALL CONFORM TO ASTM F593, TYPE 316. NUTS AND WASHERS SHALL CONFORM TO ASTM F594, TYPE 316.
      b. BOLTS SHALL HAVE A MINIMUM Fu = 70 KSI.
      c. UNLESS NOTED OTHERWISE ON THE STRUCTURAL DRAWINGS, BOLTS SHALL BE 3/4 INCH DIAMETER.
      d. BOLTS SHALL BE DESIGNED USING VALUES FOR BEARING TYPE BOLTS WITH THREAD ALLOWED IN THE SHEAR PLANE.
      e. STAINLESS STEEL BOLTS SHALL BE AT LEAST AS CORROSION RESISTANT AS THE MOST CORROSION RESISTANT OF THE MATERIALS JOINED BY THE CONNECTION.
      f. STAINLESS STEEL BOLTS SHALL BE USED AT ALL CONNECTIONS THAT JOIN STRUCTURAL STAINLESS STEEL TO ANY MATERIAL.
      g. STAINLESS STEEL BOLTS AND STRUCTURAL STAINLESS STEEL BOLTED TO CARBON STEEL, ALUMINUM, OR ANY OTHER DISSIMILAR METALS SHALL HAVE INSULATING WASHERS, GASKETS, AND BUSHINGS THAT PREVENT DIRECT CONTACT BETWEEN THE DISSIMILAR METALS.
   3. ANCHOR RODS
      a. UNLESS NOTED OTHERWISE ON THE STRUCTURAL DRAWINGS, STAINLESS STEEL ANCHOR RODS SHALL BE ASTM F593 TYPE 316, MIMIUM Fu = 70 KSI.
      b. STAINLESS STEEL ANCHOR RODS SHALL BE USED AT ALL STAINLESS STEEL BASE PLATES UNLESS NOTED OTHERWISE.
   4. REFER TO "STRUCTURAL STEEL CONNECTIONS" STRUCTURAL NOTES FOR ADDITIONAL INFORMATION.

G. REFER TO "STRUCTURAL STEEL" STRUCTURAL NOTES AND SPECIFICATION SECTION 05120 FOR ADDITIONAL INFORMATION.

STRUCTURAL ALUMINUM:

A. MATERIAL
   1. UNLESS OTHERWISE NOTED ON THE STRUCTURAL DRAWINGS, STRUCTURAL ALUMINUM MEMBERS SHALL BE:
      a. ALUMINUM SHAPES: ASTM B308/B308M, ALLOY 6061-T6, ASTM B221, ALLOY 6061-T6.
      b. ALUMINUM TUBES AND PIPES: ASTM B429, ALLOY 6061-T6.
      c. ALUMINUM BARS AND RODS: ASTM B211, ALLOY 6061-T6.
      d. ALUMINUM PLATES: ASTM B209, ALLOY 6061-T6.

B. CONNECTIONS
   1. THREADED FASTENERS:
      a. STAINLESS STEEL BOLTS, ASTM F593, AISI TYPE 303, AND STAINLESS STEEL NUTS AND WASHERS, ASTM F594, AISI TYPE 303 UNLESS OTHERWISE NOTED ON THE STRUCTURAL DRAWINGS.
      b. UNLESS NOTED OTHERWISE ON THE STRUCTURAL DRAWINGS, BOLTS SHALL BE 3/4 INCH DIAMETER. BOLTS SHALL BE DESIGNED USING VALUES FOR BEARING TYPE BOLTS WITH THREAD ALLOWED IN THE SHEAR PLANE.
      c. BOLTS SHALL BE TIGHTENED TO “SNUG TIGHT” AS DEFINED BY AISC, UNLESS NOTED OTHERWISE ON THE STRUCTURAL DRAWINGS.
   2. WELDS
      a. QUALIFY WELDING PROCESSES AND WELDING OPERATORS IN ACCORDANCE WITH AWS D1.2.
      b. ELECTRODES FOR WELDING: ER 5356 COMPLYING WITH AWS D1.2/D1.2M.
      c. FOR CONNECTIONS NOT SPECIFICALLY ADDRESSED BY THESE NOTES OR THE STRUCTURAL DRAWINGS, PROVIDE FILLET WELDS AT ALL CONTACT SURFACES SUFFICIENT TO DEVELOP THE TENSILE STRENGTH OF THE SMALLER MEMBER AT THE JOINT.

C. SPLICING OF STRUCTURAL ALUMINUM MEMBERS IS PROHIBITED WITHOUT PRIOR APPROVAL OF THE ENGINEER AS TO LOCATION AND TYPE OF SPLICE TO BE MADE. ANY MEMBER HAVING SPLICE NOT SHOWN AND DETAILED ON SHOP DRAWINGS WILL BE REJECTED.

D. FIELD CUTTING OF STRUCTURAL ALUMINUM OR ANY FIELD MODIFICATIONS TO STRUCTURAL ALUMINUM SHALL NOT BE MADE WITHOUT PRIOR APPROVAL OF THE ENGINEER.

E. FABRICATION AND ERECTION OF STRUCTURAL ALUMINUM SHALL CONFORM TO CHAPTER M OF THE AA ADM-1, ALUMINUM DESIGN MANUAL – SPECIFICATIONS FOR ALUMINUM STRUCTURES, UNLESS NOTED OTHERWISE ON THE STRUCTURAL DRAWINGS.

F. STRUCTURAL ALUMINUM CONNECTIONS NOT SPECIFICALLY DETAILED ON THE STRUCTURAL DRAWINGS SHALL BE DESIGNED AND DETAILED BY THE CONTRACTOR UNDER THE DIRECT SUPERVISION OF A PROFESSIONAL ENGINEER LICENSED IN THE STATE HAVING JURISDICTION AT THE PROJECT SITE. SEALED CALCULATIONS FOR ALL CONNECTIONS DESIGNED BY THE CONTRACTOR SHALL BE SUBMITTED FOR THE ENGINEER'S FILES.

G. REFER TO SPECIFICATION SECTION 05140 FOR ADDITIONAL INFORMATION

NO.	DATE	REVISION	APP.

JQ-IMEG
100 GLASS STREET
SUITE 202
DALLAS, TX 75207
P: 972.392.7340
TBPELS FIRM F-26651

PROJECT NUMBER : 26021466.00

JQ-IMEG RESERVES PROPRIETARY RIGHTS, INCLUDING COPYRIGHTS, TO THIS DRAWING AND THE DATA SHOWN THEREON. SAID DRAWING AND/OR DATA ARE THE EXCLUSIVE PROPERTY OF JQ-IMEG AND SHALL NOT BE USED OR REPRODUCED FOR ANY OTHER PROJECT WITHOUT THE EXPRESS WRITTEN APPROVAL AND PARTICIPATION OF JQ-IMEG. ©2026 JQ-IMEG LLC

MBROH ENGINEERING
11757 KATY FWY,
SUITE 625
HOUSTON, TX 77077
713-468-2545

INTERIM REVIEW DOCUMENTS
NOT INTENDED FOR BIDDING, PERMIT OR CONSTRUCTION PURPOSES)
JOHN D. MISCHKOT
TEXAS REGISTRATION No: 107566
DATE: 11/02/2026

SURVEYED BY:
FB NO.

CITY OF HOUSTON
HOUSTON PUBLIC WORKS

WHITE OAKS
WWTP IMPROVEMENTS
STRUCTURAL
STRUCTURAL NOTES IV

WBS NUMBER	FOR CITY OF HOUSTON USE ONLY
R-000265-0158-3	
DRAWING SCALE	
3/4" = 1'-0"	
CITY OF HOUSTON, PM	
SHAHIDUR RAHMAN, PE	
SHEET NO. 40 OF 189	

S-04

11/1/2026 10:53:58 PM

Autodesk Docs://White Oaks Wastewater Treatment Plant Improvements/25004152.01_Coh WHITE OAK_Improvements_Ex AB_R25.rvt

11/1/2026 10:53:59 PM

SPECIAL INSPECTIONS

1. SPECIAL INSPECTIONS SHALL BE PERFORMED IN ACCORDANCE WITH CHAPTER 17 OF THE 2021 INTERNATIONAL BUILDING CODE (IBC) BY A SPECIAL INSPECTOR HIRED BY THE OWNER TO PERFORM THE SPECIAL INSPECTIONS LISTED BELOW. THE SPECIAL INSPECTOR SHALL BE QUALIFIED BY AN APPROVED AGENCY ACCORDING TO THE CITY'S BUILDING OFFICIAL TO PERFORM THE SPECIAL INSPECTIONS FOR WHICH THEY WILL BE UNDERTAKING. THE CONTRACTOR SHALL COORDINATE WITH AND NOTIFY THE SPECIAL INSPECTOR OF ALL TESTS. THE SPECIAL INSPECTOR SHALL BE RESPONSIBLE TO VERIFY THAT THE ITEMS DETAILED IN THE CONSTRUCTION DOCUMENTS WERE BUILT ACCORDINGLY AND SHALL PREPARE, SIGN, AND FURNISH INSPECTION REPORTS TO THE BUILDING OFFICIAL AND THE ARCHITECT FOR ALL TIME SPENT AT THE SITE. THE INSPECTOR SHALL BRING DISCREPANCIES TO THE IMMEDIATE ATTENTION OF THE GENERAL CONTRACTOR FOR CORRECTION. IF THE DISCREPANCIES ARE NOT CORRECTED, THE DISCREPANCIES SHALL BE BROUGHT TO THE ATTENTION OF THE BUILDING OFFICIAL AND TO THE ARCHITECT PRIOR TO THE COMPLETION OF THAT PHASE OF THE WORK. THESE SPECIAL INSPECTIONS ARE IN ADDITION TO THE OTHER INSPECTIONS LISTED IN THESE STRUCTURAL NOTES OR PROJECT SPECIFICATIONS.

2. WHERE STRUCTURAL LOAD-BEARING MEMBERS AND ASSEMBLIES ARE SHOP FABRICATED, THE SPECIAL INSPECTOR SHALL VERIFY THAT THE FABRICATOR MAINTAINS DETAILED FABRICATION AND QUALITY CONTROL PROCEDURES THAT PROVIDE A BASIS FOR INSPECTION CONTROL OF THE WORKMANSHIP AND THE FABRICATOR'S ABILITY TO CONFORM TO THE CONSTRUCTION DOCUMENTS AND REFERENCED STANDARDS, UNLESS THE FABRICATOR IS REGISTERED AND APPROVED TO PERFORM SUCH WORK WITHOUT SPECIAL INSPECTION.

VERIFICATION AND INSPECTION TASKS FOR BOLTING STRUCTURAL STEEL (AISC 360-16 TABLES N5.6) [1]

SPECIAL INSPECTION REQUIRED	VERIFICATION AND INSPECTION	INSPECTION FREQUENCY		REFERENCED STANDARD	IBC REFERENCE
		CONTINUOUS	PERIODIC		
	1. INSPECTION TASKS PRIOR TO BOLTING:				
YES	A. MANUFACTURER'S CERTIFICATIONS AVAILABLE FOR FASTENER MATERIALS	X	--	AISC 360-16 N5.6-1	1705.2.1
YES	B. FASTENERS MARKED IN ACCORDANCE WITH ASTM REQUIREMENTS	--	X		
YES	C. CORRECT FASTENERS SELECTED FOR THE JOINT DETAIL (GRADE, TYPE, BOLT LENGTH IF THREADS ARE TO BE EXCLUDED FROM SHEAR PLANE) [2]	--	X		
YES	D. CORRECT BOLTING PROCEDURE SELECTED FOR JOINT DETAIL [2]	--	X		
YES	E. CONNECTING ELEMENTS, INCLUDING THE APPROPRIATE FAYING SURFACE CONDITION AND HOLE PREPARATION, IF SPECIFIED, MEET APPLICABLE REQUIREMENTS	--	X		
YES	F. PRE-INSTALLATION VERIFICATION TESTING BY INSTALLATION PERSONNEL OBSERVED AND DOCUMENTED FOR FASTENER ASSEMBLIES AND METHODS USED	--	X		
YES	G. PROPER STORAGE PROVIDED FOR BOLTS, NUTS, WASHERS AND OTHER FASTENER COMPONENTS	--	X		
	2. INSPECTION TASKS DURING BOLTING:				
YES	A. FASTENER ASSEMBLIES PLACED IN ALL HOLES AND WASHERS AND NUTS ARE POSITIONED AS REQUIRED. [2]	--	X	AISC 360-16 N5.6-2	1705.2.1
YES	B. JOINT BROUGHT TO THE SNUG-TIGHT CONDITION PRIOR TO THE PRETENSIONING OPERATION. [2]	--	X		
YES	C. FASTENER COMPONENT NOT TURNED BY THE WRENCH PREVENTED FROM ROTATING. [2]	--	X		
YES	D. FASTENERS ARE PRETENSIONED IN ACCORDANCE WITH THE RCSC SPECIFICATION, PROGRESSING SYSTEMATICALLY FROM THE MOST RIGID POINT TOWARD THE FREE EDGES.	--	X		
	3. INSPECTION TASKS AFTER BOLTING:				
YES	A. DOCUMENT ACCEPTANCE OR REJECTION OF BOLTED CONNECTIONS.	X	--	AISC 360-16 N5.6-3	1705.2.1

1. INSPECTION TASKS NOTED IN THIS TABLE ARE THE RESPONSIBILITY OF THE SPECIAL INSPECTOR OR QUALITY ASSURANCE INSPECTOR (QAI). THE FABRICATOR AND ERECTOR ARE RESPONSIBLE FOR ALL INSPECTION TASKS INDICATED IN AISC 360-16 SECTION N5 AND ASSIGNED TO THE QUALITY CONTROL INSPECTOR (QCI)

2. INSPECTION TASKS MAY BE COORDINATED WITH THE FABRICATOR OR ERECTOR'S QUALITY CONTROL INSPECTOR (QCI) WHERE INDICATED WITH THIS FOOTNOTE. ALL OTHER TASKS SHALL BE PERFORMED BY THE SPECIAL INSPECTOR.

REQUIRED SPECIAL INSPECTION OF OPEN-WEB STEEL JOISTS AND JOIST GIRDERS (IBC TABLE 1705.2.3)

SPECIAL INSPECTION REQUIRED	VERIFICATION AND INSPECTION	INSPECTION FREQUENCY		REFERENCED STANDARD	IBC REFERENCE
		CONTINUOUS	PERIODIC		
	1. INSTALLATION OF OPEN-WEB STEEL JOISTS AND JOIST GIRDERS.				
YES	A. END CONNECTIONS - WELDING OR BOLTED.	--	X	SJI SPECS PER IBC 2207.1	1705.2.3
YES	B. BRIDGING - HORIZONTAL OR DIAGONAL	--			
	1. STANDARD BRIDGING	--	X	SJI SPECS PER IBC 2207.1	1705.2.3
	2. BRIDGING THAT DIFFERS FROM THE SJI SPECIFICATIONS LISTED IN IBC SECTION 2207.1	--	X		1705.2.3

VERIFICATION AND INSPECTION TASKS FOR WELDING OF STRUCTURAL STEEL (AISC 360-16 TABLE N5.4) [1]

SPECIAL INSPECTION REQUIRED	VERIFICATION AND INSPECTION	INSPECTION FREQUENCY		REFERENCED STANDARD	IBC REFERENCE
		CONTINUOUS	PERIODIC		
	1. INSPECTION TASKS PRIOR TO WELDING:				
YES	A. WELDER QUALIFICATION RECORDS AND CONTINUITY RECORDS.	X	--	AISC 360-16 N5.4-1: AWS D1.1	1705.2.1
YES	B. WELDING PROCEDURE SPECIFICATIONS (WPSS) AVAILABLE	X	--		
YES	C. MANUFACTURER CERTIFICATIONS FOR WELDING CONSUMABLES AVAILABLE	X	--		
YES	D. MATERIAL IDENTIFICATION (TYPE/GRADE) [2]	--	X		
YES	E. WELDER IDENTIFICATION SYSTEM [2]	--	X		
YES	F. FIT-UP OF GROOVE WELDS (INCLUDING JOINT GEOMETRY) a. JOINT PREPARATIONS b. DIMENSIONS (ALIGNMENT, ROOT OPENING, ROOT FACE, BEVEL) [2] CLEANLINESS (CONDITION OF STEEL SURFACES) c. TACKING (TACK WELD QUALITY AND LOCATION) d. BACKING TYPE AND FIT (IF APPLICABLE)	--	X		
YES	G. FIT-UP OF CJP GROOVE WELDS OF HSS T-, Y- AND K-JOINTS WITHOUT BACKING (INCLUDING JOINT GEOMETRY) a. JOINT PREPARATIONS b. DIMENSIONS (ALIGNMENT, ROOT OPENING, ROOT FACE, BEVEL c. CLEANLINESS (CONDITION OF STEEL SURFACES) d. TACKING (TACK WELD QUALITY AND LOCATION)	X	--		
YES	H. CONFIGURATION AND FINISH OF ACCESS HOLES. [2]	--	X		
YES	I. FIT-UP OF FILLET WELDS [2] a. DIMENSIONS (ALIGNMENT, GAPS AT ROOT) b. CLEANLINESS (CONDITION OF STEEL SURFACES) c. TACKING (TACK WELD QUALITY AND LOCATION)	--	X		
YES	J. CHECK WELDING EQUIPMENT	--	X		
	2. INSPECTION TASKS DURING WELDING:				
YES	A. CONTROL AND HANDLING OF WELDING CONSUMABLES [2] a. PACKAGING b. EXPOSURE CONTROL	--	X	AISC 360-16 N5.4-2: AWS D1.1	1705.2.1
YES	B. NO WELDING OVER CRACKED TACK WELDS [2]	--	X		
YES	C. ENVIRONMENTAL CONDITIONS [2] a. WIND SPEED WITHIN LIMITS b. PRECIPITATION AND TEMPERATURE	--	X		
YES	D. WPS FOLLOWED [2] a. SETTINGS ON WELD EQUIPMENT b. TRAVEL SPEED c. SELECTED WELDING MATERIALS d. SHIELDING GAS TYPE/FLOW RATE e. PREHEAT APPLIED f. INTERPASS TEMPERATURE MAINTAINED (MIN/MAX) g. PROPER POSITION (F, V, H, OH)	--	X		
YES	E. WELDING TECHNIQUES [2] 1. INTERPASS AND FINAL CLEANING 2. EACH PASS WITHIN PROFILE LIMITATIONS 3. EACH PASS MEETS QUALITY REQUIREMENTS	--	X		
YES	F. PLACEMENT AND INSTALLATION OF STEEL HEADED STUD ANCHORS	X	--		
	3. INSPECTION TASKS AFTER WELDING:				
YES	A. WELDS CLEANED	--	X	AISC 360-16 N5.4-3: AWS D1.1	1705.2.1
YES	B. SIZE, LENGTH AND LOCATION OF WELDS	X	--		
YES	C. WELDS MEET VISUAL ACCEPTANCE CRITERIA a. CRACK PROHIBITION b. WELD/BASE-METAL FUSION c. CRATER CROSS SECTION d. WELD PROFILES e. WELD SIZE f. UNDERCUT g. POROSITY	X	--		
YES	D. ARC STRIKES	X	--		
YES	E. K-AREA [2]	X	--		
YES	F. WELD ACCESS HOLES IN ROLLED HEAVY SHAPES AND BUILT-UP HEAVY SHAPES [4]	X	--		
YES	G. BACKING REMOVED AND WELD TABS REMOVED (IF REQUIRED)	X	--		
YES	H. REPAIR ACTIVITIES	X	--		
YES	I. DOCUMENT ACCEPTANCE OR REJECTION OF WELDED JOINT OR MEMBER	X	--		
YES	J. NO PROHIBITED WELDS HAVE BEEN ADDED WITHOUT THE APPROVAL OF THE ENGINEER OF RECORD	X	--		

1. INSPECTION TASKS NOTED IN THIS TABLE ARE THE RESPONSIBILITY OF THE SPECIAL INSPECTOR OR QUALITY ASSURANCE INSPECTOR (QAI). THE FABRICATOR AND ERECTOR ARE RESPONSIBLE FOR ALL INSPECTION TASKS INDICATED IN AISC 360-16 SECTION N5 AND ASSIGNED TO THE QUALITY CONTROL INSPECTOR (QCI)

2. INSPECTION TASKS MAY BE COORDINATED WITH THE FABRICATOR OR ERECTOR'S QUALITY CONTROL INSPECTOR (QCI) WHERE INDICATED WITH THIS FOOTNOTE. ALL OTHER TASKS SHALL BE PERFORMED BY THE SPECIAL INSPECTOR.

3. WHEN WELDING OF DOUBLER PLATES, CONTINUITY PLATES OR STIFFENERS HAS BEEN PERFORMED IN THE K-AREA, VISUALLY INSPECT THE WEB K-AREA FOR CRACKS WITHIN 3 IN. (75 MM) OF THE WELD.

4. AFTER ROLLED HEAVY SHAPES AND BUILT-UP HEAVY SHAPES ARE WELDED, VISUALLY INSPECT THE WELD ACCESS HOLE FOR CRACKS.

NO.	DATE	REVISION	APP.

JQ-IMEG
100 GLASS STREET
SUITE 202
DALLAS, TX 75207
P: 972.392.7340
TBPELS FIRM F-26651
PROJECT NUMBER : 26021466.00

JQ-IMEG RESERVES PROPRIETARY RIGHTS, INCLUDING COPYRIGHTS, TO THIS DRAWING AND THE DATA SHOWN THEREON. SAID DRAWING AND/OR DATA ARE THE EXCLUSIVE PROPERTY OF JQ-IMEG AND SHALL NOT BE USED OR REPRODUCED FOR ANY OTHER PROJECT WITHOUT THE EXPRESS WRITTEN APPROVAL AND PARTICIPATION OF JQ-IMEG. ©2026 JQ-IMEG LLC

MBROH 20 ENGINEERING
11757 KATY FWY,
SUITE 625
HOUSTON, TX 77077
713-468-2545

INTERIM REVIEW DOCUMENTS
NOT INTENDED FOR BIDDING, PERMIT OR CONSTRUCTION PURPOSES)
JOHN D. MISCHKOT
TEXAS REGISTRATION No: 107566
DATE: 11/02/2026

SURVEYED BY:
FB NO.

CITY OF HOUSTON
HOUSTON PUBLIC WORKS

WHITE OAKS
WWTP IMPROVEMENTS
STRUCTURAL
SPECIAL INSPECTIONS I

WBS NUMBER	FOR CITY OF HOUSTON USE ONLY
R-000265-0158-3	
DRAWING SCALE	
3/4" = 1'-0"	
CITY OF HOUSTON, PM	
SHAHIDUR RAHMAN, PE	
SHEET NO. 41 OF 189	

S-05

Autodesk Docs://White Oaks Wastewater Treatment Plant Improvements/25004152.01_Coh WHITE OAK_Improvements_Ex AB_R25.rvt

11/1/2026 10:54:01 PM

VERIFICATION AND INSPECTION OF STEEL CONSTRUCTION OTHER THAN STRUCTURAL STEEL (IBC 1705.2.2)

SPECIAL INSPECTION REQUIRED	VERIFICATION AND INSPECTION	INSPECTION FREQUENCY		REFERENCED STANDARD	IBC REFERENCE
		CONTINUOUS	PERIODIC		
	1. INSPECTION OR EXECUTION TASKS PRIOR TO DECK PLACEMENT				
YES	A. VERIFY COMPLIANCE OF MATERIALS (DECK AND ALL DECK ACCESSORIES) WITH CONSTRUCTION DOCUMENTS, INCLUDING PROFILES, MATERIAL PROPERTIES, AND BASE METAL THICKNESS	X	--	SDI QA/QC-2017 TABLE 1.1	IBC 1705.2.2
YES	B. DOCUMENT ACCEPTANCE OR REJECTION OF DECK AND DECK ACCESSORIES	X	--		
	2. INSPECTION OR EXECUTION TASKS AFTER DECK PLACEMENT				
YES	A. VERIFY COMPLIANCE OF DECK AND ALL DECK ACCESSORIES INSTALLATION WITH CONSTRUCTION DOCUMENTS	X	--	SDI QA/QC-2017 TABLE 1.2	IBC 1705.2.2
YES	B. VERIFY DECK MATERIALS ARE REPRESENTED BY THE MILL CERTIFICATIONS THAT COMPLY WITH THE CONSTRUCTION DOCUMENTS	X	--		
YES	C. DOCUMENT ACCEPTANCE OR REJECTION OF INSTALLATION OF DECK AND DECK ACCESSORIES	X	--		
	3. INSPECTION OR EXECUTION TASKS PRIOR TO WELDING				
YES	A. WELDING PROCEDURE SPECIFICATIONS (WPS) AVAILABLE	X	--	SDI QA/QC-2017 TABLE 1.3	IBC 1705.2.2
YES	B. MANUFACTURER CERTIFICATIONS FOR WELDING CONSUMABLES AVAILABLE	X	--		
YES	C. MATERIAL IDENTIFICATION (TYPE/GRADE)	--	X		
YES	D. CHECK WELDING EQUIPMENT	--	X		
	4. INSPECTION OR EXECUTION TASKS DURING WELDING				
YES	A. USE OF QUALIFIED WELDERS	--	X	SDI QA/QC-2017 TABLE 1.4	IBC 1705.2.2
YES	B. CONTROL AND HANDLING OF WELDING CONSUMABLES	--	X		
YES	C. ENVIRONMENTAL CONDITIONS (WIND SPEED, MOISTURE, TEMPERATURE)	--	X		
YES	D. WPS FOLLOWED	--	X		
	5. INSPECTION OR EXECUTION TASKS AFTER WELDING				
YES	A. VERIFY SIZE AND LOCATION OF WELDS, INCLUDING SUPPORT, SIDESLAB, AND PERIMETER WELDS	X	--	SDI QA/QC-2017 TABLE 1.5	IBC 1705.2.2
YES	B. WELDS MEET VISUAL ACCEPTANCE CRITERIA	X	--		
YES	C. VERIFY REPAIR ACTIVITIES	X	--		
YES	D. DOCUMENT ACCEPTANCE OR REJECTION OF WELDS	X	--		
	6. INSPECTION OR EXECUTION TASKS PRIOR TO MECHANICAL FASTENING				
YES	A. MANUFACTURER INSTALLATION INSTRUCTIONS AVAILABLE FOR MECHANICAL FASTENERS	X	--	SDI QA/QC-2017 TABLE 1.6	IBC 1705.2.2
YES	B. PROPER TOOLS AVAILABLE FOR FASTENERS INSTALLATION	--	X		
YES	C. PROPER STORAGE FOR MECHANICAL FASTENERS	--	X		
	7. INSPECTION OR EXECUTION TASKS DURING MECHANICAL FASTENING				
YES	A. FASTENERS ARE POSITIONED AS REQUIRED	--	X	SDI QA/QC-2017 TABLE 1.7	IBC 1705.2.2
YES	B. FASTENERS ARE INSTALLED IN ACCORDANCE WITH MANUFACTURER'S INSTRUCTIONS	--	X		
	8. INSPECTION OR EXECUTION TASKS AFTER MECHANICAL FASTENING				
YES	A. CHECK SPACING, TYPE, AND INSTALLATION OF SUPPORT FASTENERS	X	--	SDI QA/QC-2017 TABLE 1.8	IBC 1705.2.2
YES	B. CHECK SPACING, TYPE, AND INSTALLATION OF SIDELAP FASTENERS	X	--		
YES	C. CHECK SPACING, TYPE, AND INSTALLATION OF PERIMETER FASTENERS	X	--		
YES	D. VERIFY REPAIR ACTIVITIES	X	--		
YES	E. DOCUMENT ACCEPTANCE OR REJECTION OF MECHANICAL FASTENERS	X	--		

VERIFICATION AND INSPECTION OF CONCRETE CONSTRUCTION (IBC TABLE 1705.3)

SPECIAL INSPECTION REQUIRED	VERIFICATION AND INSPECTION	INSPECTION FREQUENCY		REFERENCED STANDARD	IBC REFERENCE
		CONTINUOUS	PERIODIC		
YES	1. INSPECT REINFORCEMENT, INCLUDING PRESTRESSING TENDONS, AND VERIFY PLACEMENT.	--	X	ACI 318 CH. 20, 25.2, 25.3, 26.6.1-26.6.3	1908.4
	2. REINFORCING BAR WELDING:			AWS D1.4 ACI 318: 26.6.4	--
YES	A. VERIFY WELDABILITY OF REINFORCING BARS OTHER THAN ASTM A706	--	X [1]		
YES	B. INSPECT SINGLE-PASS FILLET WELDS, MAXIMUM 5/16"	--	X		
YES	C. INSPECT ALL OTHER WELDS.	X [1]	--		
YES	3. INSPECT ANCHORS AND DOWELS CAST IN CONCRETE.	--	X [1]	ACI 318: 17.8.2	--
	4. INSPECT POST-INSTALLED ANCHORS AND DOWELS IN HARDENED CONCRETE.				--
YES	A. MECHANICAL ANCHORS AND ADHESIVE ANCHORS AND DOWELS INSTALLED IN HORIZONTALLY OR UPWARDLY INCLINED ORIENTATIONS TO RESIST SUSTAINED TENSION LOADS.	X [2]	--	ACI 318: 17.8.2.4	
YES	B. MECHANICAL ANCHORS AND ADHESIVE ANCHORS AND DOWELS NOT DEFINED IN 4.A.	--	X [2]	ACI 318: 17.8.2	
YES	5. VERIFY USE OF REQUIRED DESIGN MIX.	--	X	ACI 318: CH 19, 26.4.3, 26.4.4	1904.1, 1904.2, 1908.2, 1908.3
YES	6. PRIOR TO CONCRETE PLACEMENT, FABRICATE SPECIMENS FOR STRENGTH TESTS, PERFORM SLUMP AND AIR CONTENT TESTS, AND DETERMINE THE TEMPERATURE OF THE CONCRETE.	X [3]	--	ASTM C172 ASTM C31 ACI 318: 26.5, 26.12	1908.10
YES	7. INSPECT CONCRETE AND SHOTCRETE PLACEMENT FOR PROPER APPLICATION TECHNIQUES.	X	--	ACI 318: 26.5	1908.6, 1908.7, 1908.8
YES	8. VERIFY MAINTENANCE OF SPECIFIED CURING TEMPERATURE AND TECHNIQUES.	--	X	ACI 318: 26.5.3-26.5.5	1908.9
	9. INSPECTION OF PRESTRESSED CONCRETE:				
NO	A. APPLICATION OF PRESTRESSING FORCES	X	--	ACI 318: 26.10	--
NO	B. GROUTING OF BONDED PRESTRESSING TENDONS	X	--	ACI 318: 26.10	
YES	10. INSPECT ERECTION OF PRECAST CONCRETE MEMBERS.	--	X	ACI 318: 26.9	--
	11. FOR PRECAST CONCRETE DIAPHRAGM CONNECTIONS OR REINFORCEMENT AT JOINTS CLASSIFIED AS MODERATE OR HIGH DEFORMABILITY ELEMENTS (MDE OR HDE) IN STRUCTURES ASSIGNED TO SEISMIC DESIGN CATEGORY C, D, E OR F, INSPECT SUCH CONNECTIONS AND REINFORCEMENT IN THE FIELD FOR:				
NO	A. APPLICATION OF THE EMBEDDED PARTS	X	--	ACI 318: 26.13.1.3	--
NO	B. COMPLETION OF THE CONTINUITY OF REINFORCEMENT ACROSS JOINTS	X	--	ACI 550.5	
NO	C. COMPLETION OF CONNECTIONS IN THE FIELD	X	--		
NO	12. INSPECT INSTALLATION TOLERANCES OF PRECAST CONCRETE DIAPHRAGM FOR COMPLIANCE WITH ACI 550.5.	--	X	ACI 318: 26.13.1.3	
NO	13. VERIFY IN-SITU CONCRETE STRENGTH, PRIOR TO STRESSING OF TENDONS IN POST-TENSIONED CONCRETE AND PRIOR TO REMOVAL OF SHORES AND FORMS FROM BEAMS AND STRUCTURAL SLABS.	--	X [3]	ACI 318: 26.11.2	--
YES	14. INSPECT FORMWORK FOR SHAPE, LOCATION AND DIMENSIONS OF THE CONCRETE MEMBER BEING FORMED.	--	X	ACI 318: 26.11.1.2(b)	--

1. SPECIAL INSPECTIONS OF WELDING AND QUALIFICATIONS OF SPECIAL INSPECTORS FOR REINFORCING BARS SHALL BE IN ACCORDANCE WITH THE REQUIREMENTS OF AWS D1.4 FOR SPECIAL INSPECTION AND AWS D1.4 FOR SPECIAL INSPECTOR QUALIFICATION.

2. POST-INSTALLED ANCHORS AND DOWELS SHALL BE EITHER (A.) VISUALLY INSPECTED DURING INSTALLATION, OR (B.) LOAD TESTED AFTER INSTALLATION AS NOTED BELOW:
   A. VISUAL INSPECTIONS SHALL BE PERFORMED DURING THE INSTALLATION BY A SPECIAL INSPECTOR CERTIFIED BY ACI AS A "POST-INSTALLED CONCRETE ANCHOR INSTALLATION INSPECTOR". SUBMIT A REPORT TO THE LICENSED DESIGN PROFESSIONAL AND BUILDING OFFICIAL DOCUMENTING THAT THE WORK COVERED BY THE REPORT HAS BEEN PERFORMED AND THAT THE MATERIALS USED AND THE INSTALLATION PROCEDURES USED CONFORM WITH THE APPROVED CONSTRUCTION DOCUMENTS AND THE MANUFACTURER'S PRINTED INSTALLATION INSTRUCTIONS.
   B. LOAD TESTING SHALL COMPLY WITH THE FOLLOWING:
      a. TEST AT LEAST TEN (10) PERCENT OF EACH TYPE AND DIAMETER OF POST-INSTALLED ANCHORS. IF ONE OR MORE ANCHORS FAIL THE TEST, ALL POST-INSTALLED ANCHORS OF THE SAME DIAMETER AND TYPE INSTALLED THE SAME DAY AS THE FAILED ANCHOR SHALL BE LOAD TESTED AT THE CONTRACTOR'S EXPENSE. IF ADDITIONAL ANCHORS FAIL, THE ENGINEER MAY REQUIRE TESTING ALL ANCHORS OF THE SAME DIAMETER AND TYPE ALREADY INSTALLED AT THE CONTRACTOR'S EXPENSE.
      b. TENSION TESTING SHALL COMPLY WITH ASTM E488
      c. TEST POST-INSTALLED ANCHORS TO 50 PERCENT OF ULTIMATE TENSILE CAPACITY OF POST-INSTALLED ANCHOR.
      d. APPLY TEST LOADS WITH A CALIBRATED HYDRAULIC RAM.
      e. DISPLACEMENT OF POST-INSTALLED ANCHORS SHALL NOT EXCEED D/10, WHERE D IS NOMINAL DIAMETER OF ANCHOR BEING TESTED.
      f. CORRECT DEFECTIVE WORK BY REMOVING AND REPLACING OR CORRECTING, AS DIRECTED BY ENGINEER.
      g. CONTRACTOR SHALL PAY FOR ALL CORRECTIONS, ENGINEERING, AND ADDITIONAL TESTING ASSOCIATED WITH FAILED ANCHOR TESTS.
      h. TESTING AGENCY SHALL SUBMIT TEST RESULTS TO CONTRACTOR AND ENGINEER WITH 24 HOURS OF COMPLETION OF TEST.

3. IN THE ABSENCE OF SUFFICIENT DATA OR DOCUMENTATION PROVIDING EVIDENCE OF CONFORMANCE TO QUALITY STANDARDS FOR MATERIALS IN CHAPTERS 19 AND 20 OF ACI 318, THE BUILDING OFFICIAL SHALL REQUIRE TESTING OF MATERIALS IN ACCORDANCE WITH THE APPROPRIATE STANDARD AND CRITERIA FOR THE MATERIAL IN CHAPTERS 19 AND 20 OF ACI 318.

APP.	REVISION	DATE	NO.

JQ-IMEG
100 GLASS STREET
SUITE 202
DALLAS, TX 75207
P: 972.392.7340
TBPELS FIRM F-26651
PROJECT NUMBER: 26021469.00
JQ-IMEG RESERVES PROPRIETARY RIGHTS, INCLUDING COPYRIGHTS, TO THIS DRAWING AND THE DATA SHOWN THEREON. SAID DRAWING AND/OR DATA ARE THE EXCLUSIVE PROPERTY OF JQ-IMEG AND SHALL NOT BE USED OR REPRODUCED FOR ANY OTHER PROJECT WITHOUT THE EXPRESS WRITTEN APPROVAL AND PARTICIPATION OF JQ-IMEG. ©2026 JQ-IMEG LLC

MBROH 20 ENGINEERING
11757 KATY FWY,
SUITE 625
HOUSTON, TX 77077
713-468-2545

INTERIM REVIEW DOCUMENTS
(NOT INTENDED FOR BIDDING, PERMIT OR CONSTRUCTION PURPOSES)
JOHN D. MISCHKOT
TEXAS REGISTRATION No: 107566
DATE: 11/02/2026

SURVEYED BY:
FB NO.

CITY OF HOUSTON
HOUSTON PUBLIC WORKS

WHITE OAKS WWTP IMPROVEMENTS

STRUCTURAL

SPECIAL INSPECTIONS II

WBS NUMBER	FOR CITY OF HOUSTON USE ONLY
R-000265-0158-3	
DRAWING SCALE	
3/4" = 1'-0"	
CITY OF HOUSTON, PM	
SHAHIDUR RAHMAN, PE	
S-06	SHEET NO. 42 OF 189

Autodesk Docs://White Oaks Wastewater Treatment Plant Improvements/25004152.01_CoH WHITE OAK_Improvements_Ex AB_R25.rvt

11/1/2026 10:54:01 PM

LEVEL 2 VERIFICATION AND INSPECTION OF MASONRY CONSTRUCTION (TMS 602-16 TABLE 3 & TABLE 4)

SPECIAL INSPECTION REQUIRED	VERIFICATION, INSPECTION AND TESTING	INSPECTION FREQUENCY		REFERENCE FOR CRITERIA
		CONTINUOUS	PERIODIC	
	MINIMUM TESTS			
YES	PRIOR TO CONSTRUCTION, VERIFICATION OF COMPLIANCE OF SUBMITTALS.	--	--	TMS 602-16 ART. 1.5
YES	PRIOR TO CONSTRUCTION, VERIFICATION OF F'M AND F'AAC, EXCEPT WHERE SPECIFICALLY EXEMPTED BY THE CODE.	--	--	TMS 602-16 ART. 1.4 B
YES	DURING CONSTRUCTION, VERIFICATION OF SLUMP FLOW AND VISUAL STABILITY INDEX (VSI) WHEN SELF-CONSOLIDATING GROUT IS DELIVERED TOT THE PROJECT SITE.	--	--	TMS 602-16 ART. 1.5 &1.6.3
	INSPECTION TASKS			
	1. AS MASONRY CONSTRUCTION BEGINS, VERIFY THAT THE FOLLOWING ARE IN COMPLIANCE:			
YES	A. PROPORTIONS OF SITE-PREPARED MORTAR	--	X	TMS 602-16 ART. 2.1, 2.6 A, & 2.6 C
NO	B. GRADE AND SIZE OF PRESTRESSING TENDONS AND ANCHORAGES	--	X	TMS 602-16 ART. 2.4 B & 2.4 H
YES	C. GRADE, TYPE AND SIZE OF REINFORCEMENT AND ANCHOR BOLTS, AND PRESTRESSING TENDONS AND ANCHORAGES	--	X	TMS 602-16 ART. 3.4 & 3.6 A
NO	D. PRESTRESSING TECHNIQUE	--	X	TMS 602-16 ART. 3.6 B
NO	E. PROPERTIES OF THIN-BED MORTAR FOR AAC MASONRY	X [1]	X [2]	TMS 602-16 ART. 2.1 C.1
YES	F. SAMPLE PANEL CONSTRUCTION	--	X	TMS 602-16 ART. 1.6 D
	2. PRIOR TO GROUTING, VERIFY THAT THE FOLLOWING ARE IN COMPLIANCE:			
YES	A. GROUT SPACE	--	X	TMS 602-16 ART. 3.2 D & 3.2 F
NO	B. PLACEMENT OF PRESTRESSING TENDONS AND ANCHORAGES	--	X	TMS 602-16 ART. 2.4 & 3.6, TMS 402-16 SEC. 10.8 & 10.9
YES	C. PLACEMENT OF REINFORCEMENT, CONNECTORS, AND ANCHOR BOLTS	--	X	TMS 602-16 ART. 3.2 E & 3.4, TMS 402-16 SEC. 6.1, 6.3.1, 6.3.6, & 6.3.7
YES	D. PROPORTIONS OF SITE-PREPARED GROUT AND PRESTRESSING GROUT FOR BONDED TENDONS	--	X	TMS 602-16 ART. 2.6 B & 2.4 G.1.B
	3. VERIFY COMPLIANCE OF THE FOLLOWING DURING CONSTRUCTION:			
YES	A. MATERIALS AND PROCEDURES WITH THE APPROVED SUBMITTALS	--	X	TMS 602-16 ART. 1.5
YES	B. PLACEMENT OF MASONRY UNITS AND MORTAR JOINT CONSTRUCTION	--	X	TMS 602-16 ART. 3.3 B
YES	C. SIZE AND LOCATION OF STRUCTURAL MEMBERS	--	X	TMS 602-16 ART. 3.3 F
YES	D. TYPE, SIZE, AND LOCATION OF ANCHORS, INCLUDING OTHER DETAILS OF ANCHORAGE OF MASONRY TO STRUCTURAL MEMBERS, FRAMES, OR OTHER CONSTRUCTION	--	X	TMS 402-16 SEC. 1.2.1 (E), 6.2.1, & 6.3.1
YES	E. WELDING OF REINFORCEMENT	X	--	TMS 402-16 SEC. 6.1.6.1.2
YES	F. PREPARATION, CONSTRUCTION AND PROTECTION OF MASONRY DURING COLD WEATHER (TEMPERATURE BELOW 40°F (4.4°C)) OR HOT WEATHER (TEMPERATURE ABOVE 90°F (32.2°C))	--	X	TMS 602-16 ART. 1.8 C & 1.8 D
NO	G. APPLICATION AND MEASUREMENT OF PRESTRESSING FORCE	X	--	TMS 602-16 ART. 3.6 B
NO	H. PLACEMENT OF GROUT AND PRESTRESSING GROUT FOR BONDED TENDONS IS IN COMPLIANCE	X	--	TMS 602-16 ART. 3.5 & 3.6 C
NO	I. PLACEMENT OF AAC MASONRY UNITS AND CONSTRUCTION OF THIN-BED MORTAR JOINTS	X [1]	X [2]	TMS 602-16 ART. 3.3 B.9 & 3.3 F.1.B
YES	4. OBSERVE PREPARATION OF GROUT SPECIMENS, MORTAR SPECIMENS AND/OR PRISMS	--	X	TMS 602-16 ART. 1.4 B.2.A.3, 1.4 B.2.B.3, 1.4 B.2.C.3, 1.4 B.3, & 1.4 B.4
	5. INSPECT POST-INSTALLED ANCHORS AND DOWELS IN MASONRY			
YES	A. MECHANICAL ANCHORS AND ADHESIVE ANCHORS AND DOWELS INSTALLED IN HORIZONTALLY OR UPWARDLY INCLINED ORIENTATIONS TO RESIST SUSTAINED TENSION LOADS.	X [3]	--	MANUFACTURER'S SPECIFICATIONS & PRINTED INSTALLATION INSTRUCTIONS
YES	B. MECHANICAL ANCHORS AND ADHESIVE ANCHORS AND DOWELS NOT DEFINED BY 5 A.	--	X [3]	MANUFACTURER'S SPECIFICATIONS & PRINTED INSTALLATION INSTRUCTIONS

1. REQUIRED FOR THE FIRST 5,000 SQUARE FEET (465 SQUARE METERS) OF AAC MASONRY.
2. REQUIRED AFTER THE FIRST 5,000 SQUARE FEET (465 SQUARE METERS) OF AAC MASONRY.
3. POST-INSTALLED ANCHORS AND DOWELS SHALL BE EITHER (A.) VISUALLY INSPECTED DURING INSTALLATION, OR (B.) LOAD TESTED AFTER INSTALLATION AS NOTED BELOW:
   - A. VISUAL INSPECTIONS SHALL BE PERFORMED DURING THE INSTALLATION BY A SPECIAL INSPECTOR CERTIFIED BY ACI AS A "POST-INSTALLED CONCRETE ANCHOR INSTALLATION INSPECTOR". SUBMIT A REPORT TO THE LICENSED DESIGN PROFESSIONAL AND BUILDING OFFICIAL DOCUMENTING THAT THE WORK COVERED BY THE REPORT HAS BEEN PERFORMED AND THAT THE MATERIALS USED AND THE INSTALLATION PROCEDURES USED CONFORM WITH THE APPROVED CONSTRUCTION DOCUMENTS AND THE MANUFACTURER'S PRINTED INSTALLATION INSTRUCTIONS.
   - B. LOAD TESTING SHALL COMPLY WITH THE FOLLOWING:
     - a. TEST AT LEAST TEN (10) PERCENT OF EACH TYPE AND DIAMETER OF POST-INSTALLED ANCHORS. IF ONE OR MORE ANCHORS FAIL THE TEST, ALL POST-INSTALLED ANCHORS OF THE SAME DIAMETER AND TYPE INSTALLED THE SAME DAY AS THE FAILED ANCHOR SHALL BE LOAD TESTED AT THE CONTRACTOR'S EXPENSE. IF ADDITIONAL ANCHORS FAIL, THE ENGINEER MAY REQUIRE TESTING ALL ANCHORS OF THE SAME DIAMETER AND TYPE ALREADY INSTALLED AT THE CONTRACTOR'S EXPENSE.
     - b. TENSION TESTING SHALL COMPLY WITH ASTM E488
     - c. TEST POST-INSTALLED ANCHORS TO 50 PERCENT OF ULTIMATE TENSILE CAPACITY OF POST-INSTALLED ANCHOR.
     - d. APPLY TEST LOADS WITH A CALIBRATED HYDRAULIC RAM.
     - e. DISPLACEMENT OF POST-INSTALLED ANCHORS SHALL NOT EXCEED D/10, WHERE D IS NOMINAL DIAMETER OF ANCHOR BEING TESTED.
     - f. CORRECT DEFECTIVE WORK BY REMOVING AND REPLACING OR CORRECTING, AS DIRECTED BY ENGINEER.
     - g. CONTRACTOR SHALL PAY FOR ALL CORRECTIONS, ENGINEERING, AND ADDITIONAL TESTING ASSOCIATED WITH FAILED ANCHOR TESTS.
     - h. TESTING AGENCY SHALL SUBMIT TEST RESULTS TO CONTRACTOR AND ENGINEER WITH 24 HOURS OF COMPLETION OF TEST.

VERIFICATION AND INSPECTION OF SOILS (IBC TABLE 1705.6)

SPECIAL INSPECTION REQUIRED	VERIFICATION, INSPECTION AND TESTING	INSPECTION FREQUENCY	
		CONTINUOUS	PERIODIC
YES	1. VERIFY MATERIALS BELOW SHALLOW FOUNDATIONS ARE ADEQUATE TO ACHIEVE THE DESIGN BEARING CAPACITY.	--	X
YES	2. VERIFY EXCAVATIONS ARE EXTENDED TO PROPER DEPTH AND HAVE REACHED PROPER MATERIAL.	--	X
YES	3. PERFORM CLASSIFICATION AND TESTING OF COMPACTED FILL MATERIALS.	--	X
YES	4. VERIFY USE OF PROPER MATERIALS, DENSITIES AND LIFT THICKNESSES DURING PLACEMENT AND COMPACTION OF COMPACTED FILL.	X	--
YES	5. PRIOR TO PLACEMENT OF COMPACTED FILL, INSPECT SUBGRADE AND VERIFY THAT SITE HAS BEEN PREPARED PROPERLY.	--	X

VERIFICATION AND INSPECTION OF CAST-IN-PLACE DEEP FOUNDATION ELEMENTS (IBC TABLE 1705.8)

SPECIAL INSPECTION REQUIRED	VERIFICATION AND INSPECTION	INSPECTION FREQUENCY	
		CONTINUOUS	PERIODIC
YES	1. INSPECT DRILLING OPERATIONS AND MAINTAIN COMPLETE AND ACCURATE RECORDS FOR EACH ELEMENT.	X	--
YES	2. VERIFY PLACEMENT LOCATIONS AND PLUMBNESS, CONFIRM ELEMENT DIAMETERS, BELL DIAMETERS (IF APPLICABLE), LENGTHS, EMBEDMENT INTO BEDROCK (IF APPLICABLE) AND ADEQUATE END BEARING STRATA CAPACITY. RECORD CONCRETE OR GROUT VOLUMES.	X	--
YES	3. FOR CONCRETE ELEMENTS, PERFORM ADDITIONAL INSPECTIONS IN ACCORDANCE WITH IBC SECTION 1705.3.	--	--

1. WHENEVER THERE IS A REASONABLE DOUBT AS TO THE STRUCTURAL INTEGRITY OF A DEEP FOUNDATION ELEMENT, AN ENGINEERING ASSESSMENT SHALL BE REQUIRED. THE ENGINEERING ASSESSMENT SHALL INCLUDE TESTS FOR DEFECTS PERFORMED IN ACCORDANCE WITH ASTM D4945, ASTM D5822, ASTM D6760 OR ASTM D7949, OR OTHER APPROVED METHOD.

NO.	DATE	REVISION	APP.

JQ-IMEG
100 GLASS STREET
SUITE 202
DALLAS, TX 75207
P: 972.392.7340
TBPELS FIRM F-26651
PROJECT NUMBER : 26021466.00
JQ-IMEG RESERVES PROPRIETARY RIGHTS, INCLUDING COPYRIGHTS, TO THIS DRAWING AND THE DATA SHOWN THEREON. SAID DRAWING AND/OR DATA ARE THE EXCLUSIVE PROPERTY OF JQ-IMEG AND SHALL NOT BE USED OR REPRODUCED FOR ANY OTHER PROJECT WITHOUT THE EXPRESSED WRITTEN APPROVAL AND PARTICIPATION OF JQ-IMEG. ©2026 JQ-IMEG LLC

MBROH ENGINEERING 20
11757 KATY FWY,
SUITE 625
HOUSTON, TX 77077
713-468-2545

INTERIM REVIEW DOCUMENTS
(NOT INTENDED FOR BIDDING, PERMIT OR CONSTRUCTION PURPOSES)
JOHN D. MISCHKOT
TEXAS REGISTRATION No: 107566
DATE: 11/02/2026

SURVEYED BY:
FB NO.

CITY OF HOUSTON
HOUSTON PUBLIC WORKS

WHITE OAKS WWTP IMPROVEMENTS

STRUCTURAL

SPECIAL INSPECTIONS III

WBS NUMBER	FOR CITY OF HOUSTON USE ONLY
R-000265-0158-3	
DRAWING SCALE	
3/4" = 1'-0"	
CITY OF HOUSTON, PM	
SHAHIDUR RAHMAN, PE	
S-07	SHEET NO. 43 OF 189

Autodesk Docs://White Oaks Wastewater Treatment Plant Improvements/25004152.01_CoH WHITE OAK_Improvements_Ex AB_R25.rvt

11/1/2026 10:54:02 PM

SYMBOLS LEGEND

SYMBOL	DESCRIPTION
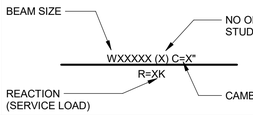	COMPOSITE STEEL BEAM
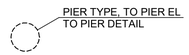	CONCRETE PIER
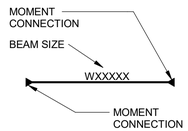	STEEL BEAM MOMENT CONNECTION
	STEEL COLUMN
	CONCRETE COLUMN
	NEW COLUMN GRID
	EXISTING COLUMN GRID
	GRATING
	SLAB OR DECK SPAN DIRECTION
	DROP IN SLAB OR DECK
	DROP AND SLOPE IN SLAB OR DECK
	SLOPE IN SLAB OR DECK
	VERTICAL STEEL BRACE
	STEEL BEAM SPLICE
	HEAVY STEEL CONNECTION
	STUDRAIL
	MASONRY WALL
	WINDOW IN MASONRY WALL
	DOOR IN MASONRY WALL
	NONLOAD-BEARING WALL
	CONCRETE WALL
	PRECAST WALL PANEL
	EXISTING CONSTRUCTION
	MISCELLANEOUS, SEE PLAN
	ROOF TOP UNIT (RTU)

ABOVE	ABV	FIREPROOF(ING)	FP	PREFABRICATED	PREFAB
ABOVE FINISHED FLOOR	AFF	FLANGE	FLG	PRELIMINARY	PRELIM
ADDITIONAL	ADDN'L	FLOOR	FL	PRESSURE TREATED	PT
ADHESIVE	ADH	FLOOR DRAIN	FD	PROJECTION	PROJ
ADJACENT	ADJ	FOOT (OR) FEET	FT		
AGGREGATE	AGGR	FOUNDATION	FNDN	QUANTITY	QTY
AIR CONDITIONER	A/C	FRAMING	FRMG		
AIR HANDLING UNIT	AHU			RADIUS	R
ALTERNATE	ALT	GAGE OR GAUGE	GA	REINFORCE(D)(MENT)	REINF
ALUMINUM	AL	GALVANIZED	GALV	REINFORCED CONCRETE PIPE	RCP
AMERICAN CONCRETE INSTITUTE	ACI	GENERAL CONTRACTOR	GC	REMAINDER	REM
AMERICAN INSTITUE OF STEEL CONSTRUCTION	AISC	GRADE	GR	REQUIRE	REQ
		GRADE BEAM	GR BM	REQUIRED	REQ'D
ANCHOR BOLT	AB	GRATING	GRTG	RISER	RIS
AND	&			ROOF	RF
ANGLE	L	HEADED STUD ANCHOR	HSA	ROOF DRAIN	RD
APPROVED	APPD	HEIGHT	HT	ROOF TOP UNIT	RTU
APPROXIMATE	APPROX	HIGH POINT	HP	ROOM	RM
ARCHITECT	ARCH	HOLLOW STRUCTURAL SECTION	HSS	ROUGH OPENING	RO
ARCHITECTURAL	ARCH'L	HOOK	HK	ROUND	RND
AT	@	HORIZONTAL	HORIZ		
		HORIZONTAL BRACE	HB	SCHEDULE(D)	SCHED
BACK FACE	BF	HOT-DIP	HD	SECTION	SECT
BACK TO BACK	B TO B	HYDROPHILIC	HYD	SHEAR	V
BASEMENT	BSMT			SHEET	SHT
BEAM	BM	INCH	IN	SHORT SLOTTED HOLE	SSL
BEARING	BRG	INFORMATION	INFO	SIDEWALK	SW
BELOW FINISH FLOOR	BFF	INSIDE DIAMETER	ID	SIMILAR	SIM
BETWEEN	BTWN	INSIDE FACE	IF	SLAB ON GRADE	SOG
BEVEL(ED)	BEV('D)	INTERIOR	INT	SPACE	SPA
BLOCK	BLK	INTERMEDIATE	INTERM	SPECIFICATION(S)	SPEC(S)
BLOCK LINTEL	BL			SPECIFIED	SPEC'D
BLOCKING	BLKG	JOINT	JT	SQUARE	SQ
BOTTOM	BOT	JOIST GIRDER	JG	SQUARE FOOT	SF
BOTTOM OF	BO	JOIST(S)	JST(S)	STAGGERED	STAGG
BOTTOM OF STEEL	BOS			STAINLESS STEEL	SS
BRACKET	BRKT	KIP PER LINEAR FOOT	KLF	STANDARD	STD
BRICKLEDGE	BRL	KIP PER SQUARE FOOT	KSF	STEEL	STL
BRIDGING	BRDG	KIP PER SQUARE INCH	KSI	STEEL JOIST INSTITUE	SJI
BUILDING	BLDG	KIPS (1000 LBS)	K	STIFFENER	STIFF
				STIRRUPS	STIRR
CAMBER	C	LENGTH	L	STRAIGHT	STR
CAST-IN-PLACE	CIP	LIGHTWEIGHT	LW	STRUCTURAL	STRUCT'L
CEILING	CLG	LIGHTWEIGHT CONCRETE	LWC	STRUCTURE	STRUCT
CENTER LINE	CL	LIVE LOAD	LL	SUBCONTRACTOR	SUBCONTR
CENTER OF GRAVITY	CG	LOCATION(S)	LOC(S)	SUPPORT(S)	SUPT(S)
CENTER OF GRAVITY OR STRAND	CGS	LONG LEG HORIZONTAL	LLH		
CLEAR OR CLEARANCE	CLR	LONG LEG VERTICAL	LLV	TEMPERATURE	TEMP
COLD FORMED STEEL	CFS	LONG SIDE HORIZONTAL	LSH	TENSION	T
COLUMN	COL	LONG SIDE VERTICAL	LSV	THICK	THK
COMPRESSION	C OR COMP	LONG SLOTTED HOLE	LSL	THREAD(ED)	THRD
CONCRETE	CONC	LONGITUDINAL	LONG	TOP AND BOTTOM	T&B
CONCRETE MASONRY UNIT	CMU	LOW POINT	LP	TOP OF	TO
CONNECTION(S)	CONN(S)			TOP OF BEAM	TOB
CONSTRUCTION	CONST	MANUFACTURE(R)	MFR	TOP OF CONCRETE	TOC
CONSTRUCTION JOINT	CONST JT	MASONRY	MAS	TOP OF GRATING	TOG
CONTINUOUS	CONT	MATERIAL	MAT	TOP OF STEEL	TOS
CONTRACTOR	CONTR	MAXIMUM	MAX	TOP OF WALL	TOW
CONTROL JOINT	CJ	MECHANICAL	MECH	TRANSVERSE	TRANSV
COORDINATE	COORD	MECHANICAL, ELECTRICAL, PLUMBING	MEP	TREAD	TR
COVER PLATE	COV PL	METAL	MTL	TYPICAL	TYP
		MEZZANINE	MEZZ		
DEAD LOAD	DL	MIDDLE	MID	UNLESS NOTED OTHERWISE	UNO
DEFORMED BAR ANCHOR	DBA	MINIMUM	MIN		
DEMOLISH	DEMO	MISCELLANEOUS	MISC	VERTICAL	VERT
DETAIL	DTL	MOMENT	M	VERTICAL BRACE	VB
DIAGONAL	DIAG	MOMENT CONNECTION(S)	MC		
DIAMETER	DIA OR Ø			WATERSTOP	WS
DIMENSION(S)	DIM(S)	NEAR FACE	NF	WEIGHT	WT
DOUBLE	DBL	NOMINAL	NOM	WELDED WIRE MESH	WWM
DOUBLE EXTRA STRONG	XX-STR	NON-SHRINK	NS	WIDTH	W
DOVETAIL	DVTL	NOT IN CONTRACT	NIC	WIND LOAD	WL
DOWEL(S)	DWL(S)	NOT TO SCALE	NTS	WINDOW	WDW
DRAWING(S)	DWG(S)	NUMBER	NO OR #	WITH	W/
				WITHOUT	W/O
EACH	EA	ON CENTER	OC	WORK POINT	WP
EACH FACE	EF	OPENING(S)	OPNG(S)		
EACH WAY	EW	OPPOSITE	OPP		
ELECTRICAL	ELEC	OPPOSITE HAND	OH		
ELEVATION	EL	OUTSIDE DIAMATER	OD		
ELEVATOR	ELEV	OUTSIDE FACE	OF		
EMBEDMENT	EMBED	OVER-SIZED HOLE	OVS		
ENGINEER	ENGR				
EQUAL	EQ	PAN	P		
EQUIPMENT	EQUIP	PANEL JOINT	PJ		
EXHAUST FAN	EF	PARALLEL	PAR		
EXISTING	EX OR EXIST	PERPENDICULAR	PERP		
EXPANSION	EXP	PIECE	PC		
EXPANSION JOINT	EJ	PLATE	PL		
EXTERIOR	EXT	POINT	PT		
EXTRA STRONG	X-STR	POST-TENSION(ED)	P-T		
		POUNDS	# OR LBS		
FABRICATOR	FABR	POUNDS PER CUBIC FOOT	PCF		
FACE TO FACE	F TO F	POUNDS PER LINEAR FOOT	PLF		
FAR SIDE	FS	POUNDS PER SQUARE FOOT	PSF		
FIELD VERIFY	FV	POUNDS PER SQUARE INCH	PSI		
FINISH(ED)	FIN('D)	PRE-ENGINEERED METAL BUILDING	PEMB		
FINISHED FLOOR	FIN FL	PRECAST CONCRETE	P/C		

NOTE:

THIS IS A GENERAL LIST OF SYMBOLS AND ABBREVIATIONS. NOT ALL ITEMS SHOWN HERE APPEAR ON THE CONTRACT DRAWINGS.

NO.	DATE	REVISION	APP.

JQ-IMEG
100 GLASS STREET
SUITE 202
DALLAS, TX 75207
P: 972.392.7340
TBPELS FIRM F-26651
PROJECT NUMBER : 26021466.00

JQ-IMEG RESERVES PROPRIETARY RIGHTS, INCLUDING COPYRIGHTS, TO THIS DRAWING AND THE DATA SHOWN THEREON. SAID DRAWING AND/OR DATA ARE THE PROPERTY OF JQ-IMEG AND SHALL NOT BE USED OR REPRODUCED FOR ANY OTHER PROJECT WITHOUT THE EXPRESSED WRITTEN APPROVAL AND PARTICIPATION OF JQ-IMEG. ©2026 JQ-IMEG LLC

MBROH ENGINEERING 20
11757 KATY FWY,
SUITE 625
HOUSTON, TX 77077
713-468-2545

INTERIM REVIEW DOCUMENTS
(NOT INTENDED FOR BIDDING, PERMIT OR CONSTRUCTION PURPOSES)

JOHN D. MISCHKOT
TEXAS REGISTRATION No: 107566
DATE: 11/02/2026

SURVEYED BY:

FB NO.

CITY OF HOUSTON
HOUSTON PUBLIC WORKS

WHITE OAKS WWTP IMPROVEMENTS

STRUCTURAL

PROJECT SYMBOLS & ABBREVIATIONS

WBS NUMBER	FOR CITY OF HOUSTON USE ONLY
R-000265-0158-3	
DRAWING SCALE	
12" = 1'-0"	
CITY OF HOUSTON, PM	
SHAHIDUR RAHMAN, PE	

S-08

SHEET NO. 44 OF 189

Autodesk Docs://White Oaks Wastewater Treatment Plant Improvements/25004152.01_CoH WHITE OAK_Improvements_Ex AB_R25.rvt

11/2/2026 8:06:26 PM

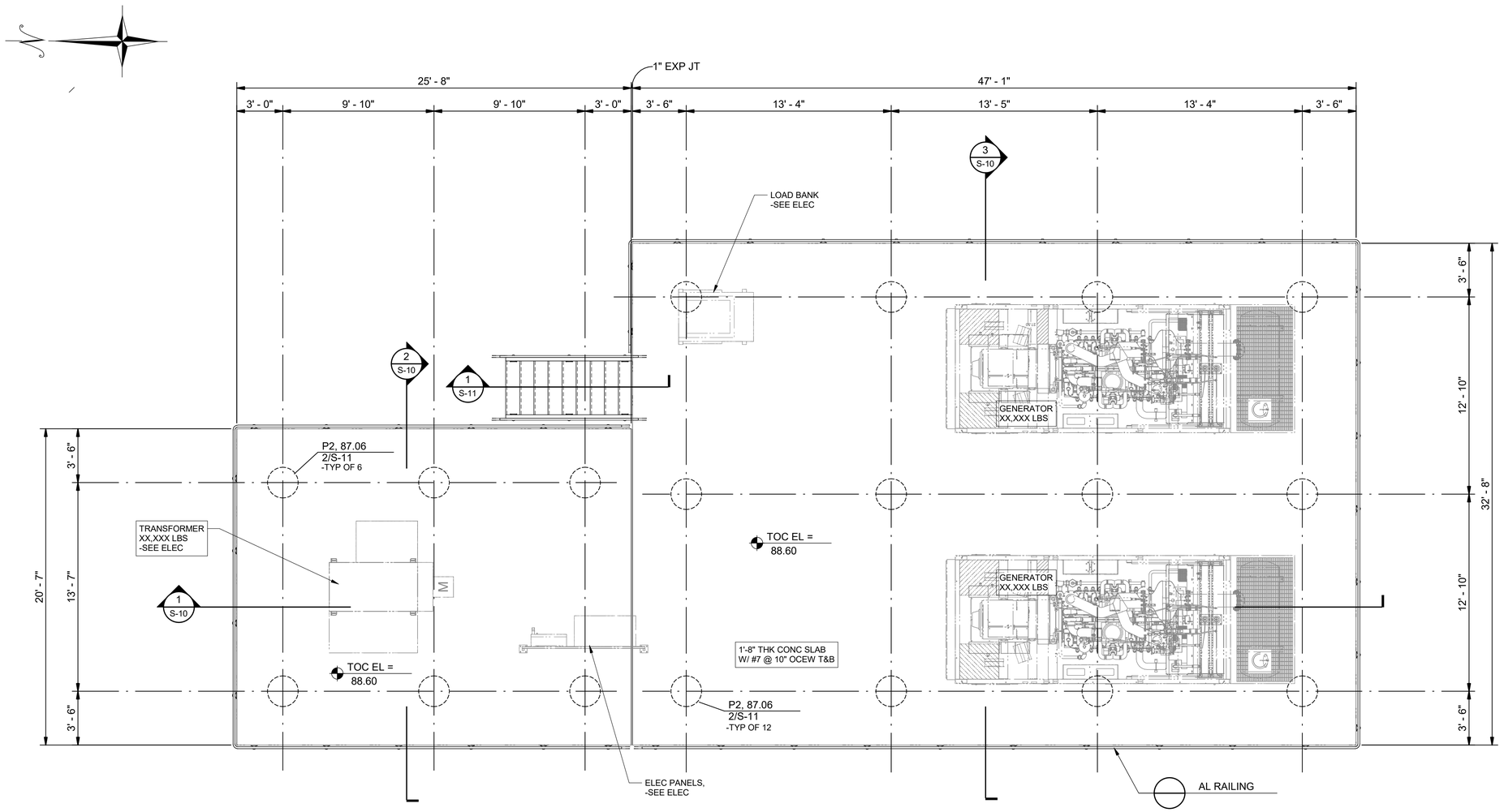

ELECTRICAL SERVICE PLATFORM PLAN

SCALE: 1/4" = 1'-0"

PLAN NOTES:

1. THE CONTRACTOR SHALL FIELD LOCATE ALL EXISTING UNDERGROUND UTILITIES AND PIPING PRIOR TO BEGINNING EXCAVATION AND PIER DRILLING. NOTIFY ENGINEER IN CASE OF CONFLICT PRIOR TO RELOCATING UTILITIES.
2. REFER TO CIVIL DRAWINGS FOR STATION AND SITE LOCATION COORDINATE INFORMATION.
3. THE CONTRACTOR SHALL COORDINATE ALL ELECTRICAL AND PIPING PENETRATIONS IN THE STRUCTURE PRIOR TO CONSTRUCTION. PIPING AND EQUIPMENT INFORMATION SHOWN ON THIS PLAN ARE FOR GENERAL INFORMATION ONLY AS IT RELATES TO THE STRUCTURE. REFER TO THE CIVIL, MECHANICAL, AND ELECTRICAL DRAWINGS FOR ALL PIPING PENETRATIONS/LOCATIONS AND EQUIPMENT INFORMATION NOT SHOWN ON THESE SHEETS.
4. COORDINATE ALL ELEVATIONS, DIMENSIONS AND INVERT ELEVATIONS WITH CIVIL DRAWINGS.
5. THE DRILLED PIERS ARE NOTED AS THUS ON PLANS:

PX, TO PIER EL
TO PIER DTL

SEE SHEET -/--- FOR DRILLED PIER SCHEDULE AND SEE "DRILLED PIER NOTES ON SHEET S-02 FOR ADDITIONAL INFORMATION.

NO.	DATE	REVISION	APP.

JQ-IMEG
100 GLASS STREET
SUITE 202
DALLAS, TX 75207
P: 972.392.7340
TBPELS FIRM F-26651

PROJECT NUMBER : 26021466.00

JQ-IMEG RESERVES PROPRIETARY RIGHTS, INCLUDING COPYRIGHTS, TO THIS DRAWING AND THE DATA SHOWN THEREON. SAID DRAWING AND/OR DATA ARE THE EXCLUSIVE PROPERTY OF JQ-IMEG AND SHALL NOT BE USED OR REPRODUCED FOR ANY OTHER PROJECT WITHOUT THE EXPRESS WRITTEN APPROVAL AND PARTICIPATION OF JQ-IMEG. ©2026 JQ-IMEG LLC

MBROH 20 ENGINEERING
11757 KATY FWY,
SUITE 625
HOUSTON, TX 77077
713-468-2545

INTERIM REVIEW DOCUMENTS

(NOT INTENDED FOR BIDDING, PERMIT OR CONSTRUCTION PURPOSES)

JOHN D. MISCHKOT
TEXAS REGISTRATION No: 107566
DATE: 11/02/2026

SURVEYED BY:

FB NO.

CITY OF HOUSTON
HOUSTON PUBLIC WORKS

WHITE OAKS WWTP IMPROVEMENTS

STRUCTURAL

ELECTRICAL SERVICE PLATFORM PLAN

WBS NUMBER	FOR CITY OF HOUSTON USE ONLY
R-000265-0158-3	
DRAWING SCALE	
As indicated	
CITY OF HOUSTON, PM	
SHAHIDUR RAHMAN, PE	
SHEET NO. 45 OF 189	

S-09

Autodesk Docs://White Oaks Wastewater Treatment Plant Improvements/20031-10-S_RVT25.rvt

11/2/2026 8:06:27 PM

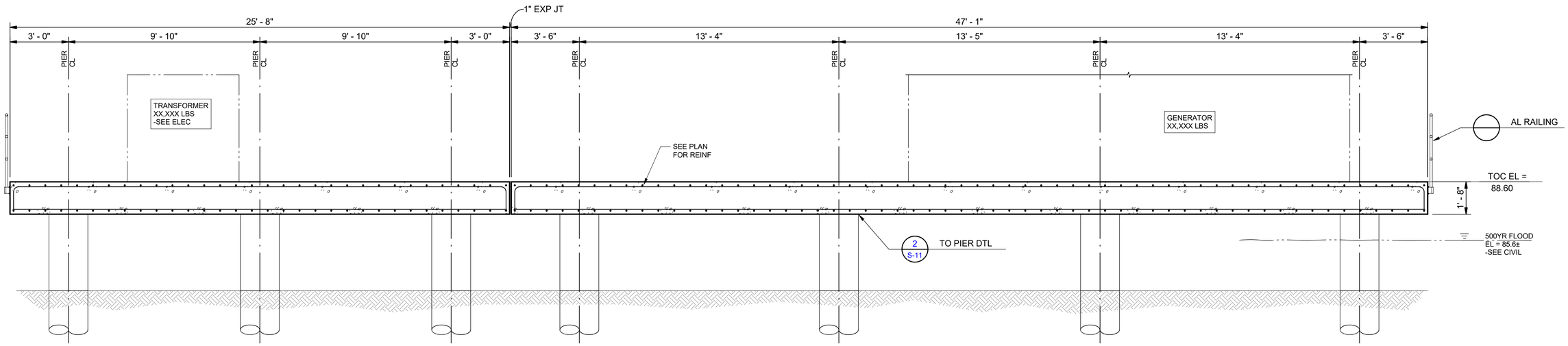

ELEC SERVICE PLATFORM

SECTION 1 / S-09

SCALE: 3/8" = 1'-0"

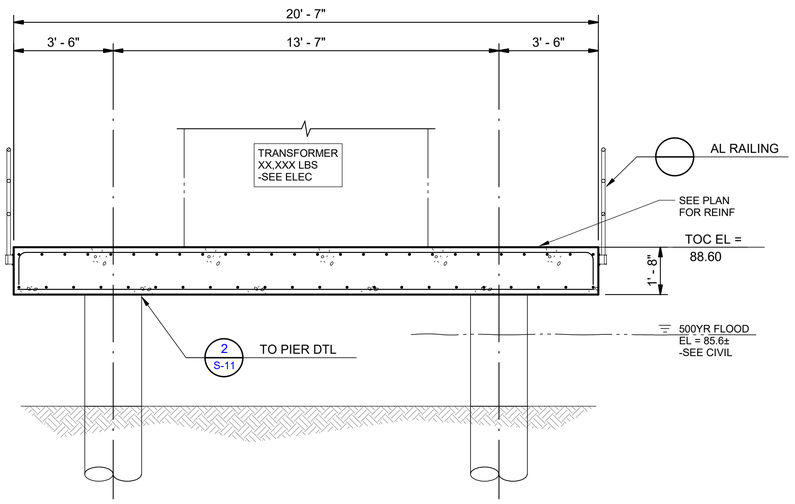

ELEC SERVICE PLATFORM

SECTION 2 / S-09

SCALE: 3/8" = 1'-0"

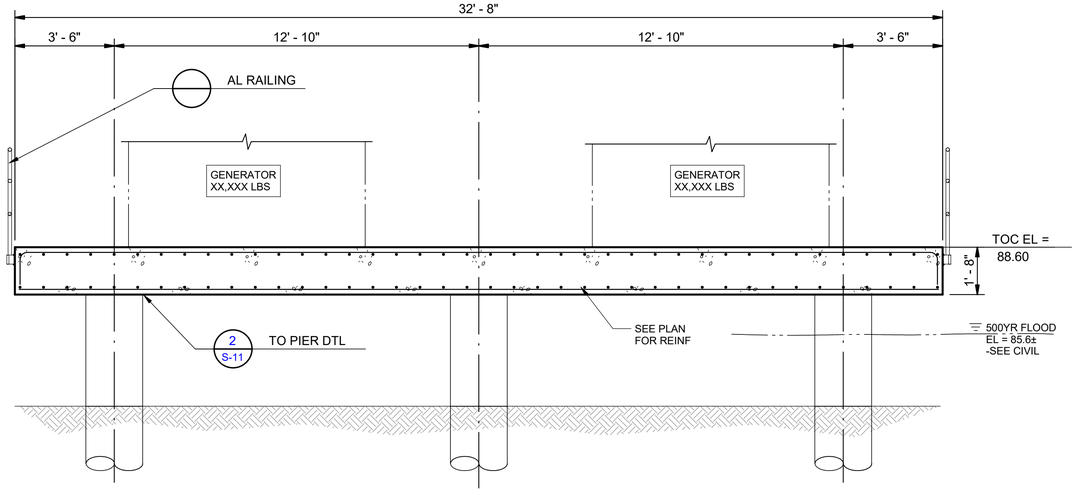

ELEC SERVICE PLATFORM

SECTION 3 / S-09

SCALE: 3/8" = 1'-0"

NO.	DATE	REVISION	APP.

JQ-IMEG
100 GLASS STREET
SUITE 202
DALLAS, TX 75207
P: 972.392.7340
TBPELS FIRM F-26651

PROJECT NUMBER : 260214660.00

JQ-IMEG RESERVES PROPRIETARY RIGHTS, INCLUDING COPYRIGHTS, TO THIS DRAWING AND THE DATA SHOWN THEREON. SAID DRAWING AND/OR DATA ARE THE PROPERTY OF JQ-IMEG AND SHALL NOT BE USED OR REPRODUCED FOR ANY OTHER PROJECT WITHOUT THE EXPRESSED WRITTEN APPROVAL AND PARTICIPATION OF JQ-IMEG. ©2026 JQ-IMEG LLC

MBROH ENGINEERING 20
11757 KATY FWY,
SUITE 625
HOUSTON, TX 77077
713-468-2545

INTERIM REVIEW DOCUMENTS

(NOT INTENDED FOR BIDDING, PERMIT OR CONSTRUCTION PURPOSES)

JOHN D. MISCHKOT
TEXAS REGISTRATION No: 107566
DATE: 11/02/2026

SURVEYED BY:

FB NO.

CITY OF HOUSTON
HOUSTON PUBLIC WORKS

WHITE OAKS WWTP IMPROVEMENTS

STRUCTURAL

ELECTRICAL SERVICE PLATFORM SECTIONS AND DETAILS I

WBS NUMBER	FOR CITY OF HOUSTON USE ONLY
R-000265-0158-3	
DRAWING SCALE	
3/8" = 1'-0"	
CITY OF HOUSTON, PM	
SHAHIDUR RAHMAN, PE	

S-10

SHEET NO. 46 OF 189

Autodesk Docs://White Oaks Wastewater Treatment Plant Improvements/20031-10-5_RVT25.rvt

11/2/2026 8:06:28 PM

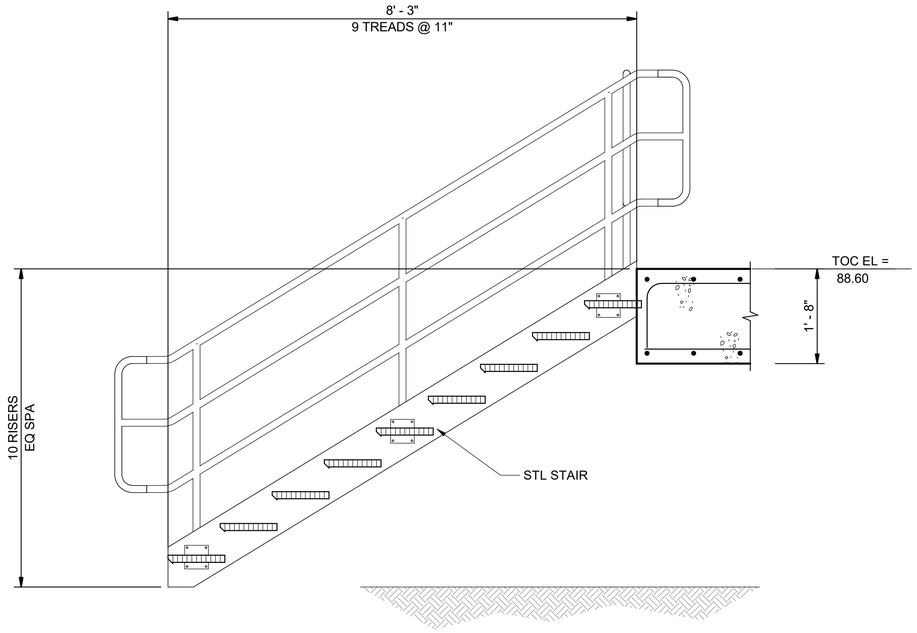

STAIR

SECTION 1 / SCALE: 3/4" = 1'-0" / S-09

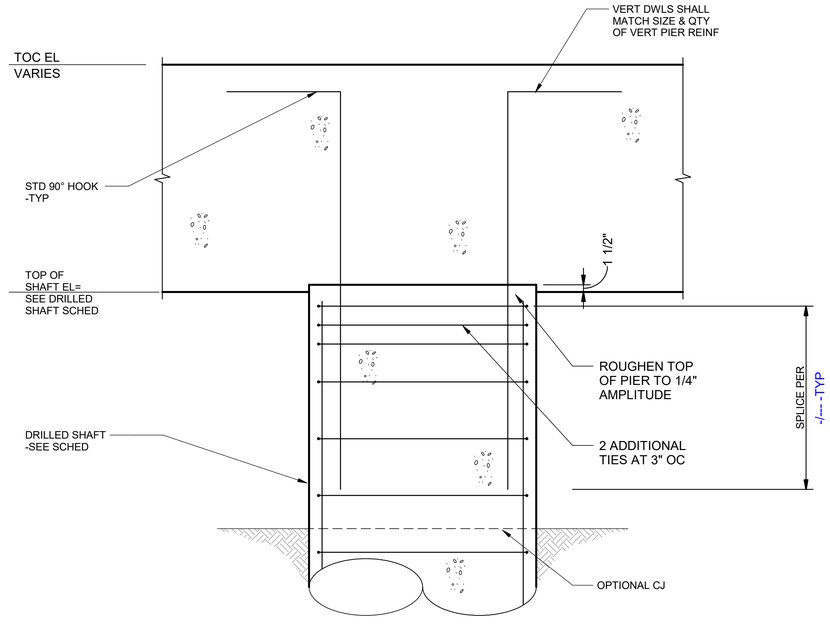

TOP OF PIER DTL

SECTION 2 / SCALE: 3/4" = 1'-0"

NO.	DATE	REVISION	APP.

JQ-IMEG
100 GLASS STREET
SUITE 202
DALLAS, TX 75207
P: 972.392.7340
TBPELS FIRM F-26651

PROJECT NUMBER : 26021466.00

JQ-IMEG RESERVES PROPRIETARY RIGHTS, INCLUDING COPYRIGHTS, TO THIS DRAWING AND THE DATA SHOWN THEREON. SAID DRAWING AND/OR DATA ARE THE PROPERTY OF JQ-IMEG AND SHALL NOT BE USED OR REPRODUCED FOR ANY OTHER PROJECT WITHOUT THE EXPRESS WRITTEN APPROVAL AND PARTICIPATION OF JQ-IMEG. ©2026 JQ-IMEG LLC

MBROH ENGINEERING
11757 KATY FWY,
SUITE 625
HOUSTON, TX 77077
713-468-2545

SURVEYED BY:

FB NO.

INTERIM REVIEW DOCUMENTS
(NOT INTENDED FOR BIDDING, PERMIT OR CONSTRUCTION PURPOSES)

JOHN D. MISCHKOT
TEXAS REGISTRATION No: 107566
DATE: 11/02/2026

CITY OF HOUSTON
HOUSTON PUBLIC WORKS

WHITE OAKS
WWTP IMPROVEMENTS

STRUCTURAL

ELECTRICAL SERVICE PLATFORM SECTIONS AND DETAILS II

WBS NUMBER	FOR CITY OF HOUSTON USE ONLY
R-000265-0158-3	
DRAWING SCALE	
3/4" = 1'-0"	
CITY OF HOUSTON, PM	
SHAHIDUR RAHMAN, PE	

Autodesk Docs://White Oaks Wastewater Treatment Plant Improvements/20031-10-5_RVT25.rvt

11/2/2026 7:58:24 PM

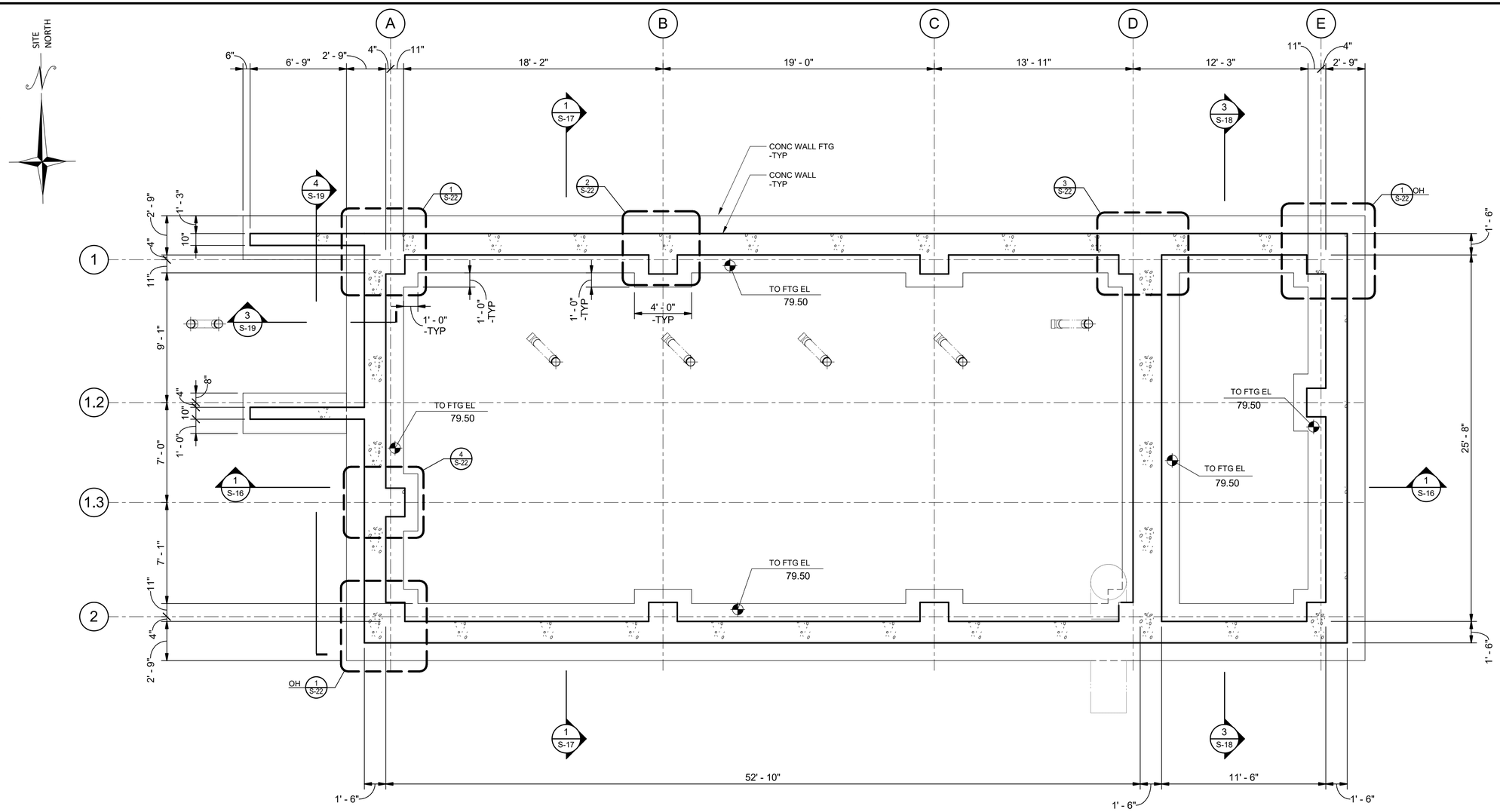

BLOWER BUILDING

PLAN

1/4" = 1'-0"

PLAN NOTES:

1. THE ALLOWABLE BEARING PRESSURE USED FOR THE WALL FOOTING DESIGN IS IN ACCORDANCE WITH THE GEOTECHNICAL REPORT LISTED ON 00-GS-01. THE ALLOWABLE BEARING IS 4,500 PSF FOR DEAD PLUS SUSTAINED LIVE AND 6,700 PSF FOR NET TOTAL LOAD CONDITION.
2. THE CONTRACTOR SHALL FIELD VERIFY ALL EXISTING UNDERGROUND UTILITIES AND PIPING PRIOR TO BEGINNING EXCAVATION. NOTIFY THE ENGINEER OF ANY CONFLICTS PRIOR TO RELOCATING ANY EXISTING UTILITIES/PIPING.
3. CONTRACTOR SHALL COORDINATE WITH THE OTHER DISCIPLINES' DRAWING FOR ANY PIPING PENETRATIONS AND/OR OPENINGS NOT SHOWN ON THIS DRAWING.
4. REFER TO THE CIVIL DRAWINGS FOR STATION AND SITE LOCATION INFORMATION.

NO.	DATE	REVISION	APP.

JQ-IMEG
100 GLASS STREET
SUITE 202
DALLAS, TX 75207
P: 972.392.7340
TBPELS FIRM F-26651
PROJECT NUMBER : 26021466.00

JQ-IMEG RESERVES PROPRIETARY RIGHTS, INCLUDING COPYRIGHTS, TO THIS DRAWING AND THE DATA SHOWN THEREON. SAID DRAWING AND/OR DATA ARE THE EXCLUSIVE PROPERTY OF JQ-IMEG AND SHALL NOT BE USED OR REPRODUCED FOR ANY OTHER PROJECT WITHOUT THE EXPRESS WRITTEN APPROVAL AND PARTICIPATION OF JQ-IMEG. ©2026 JQ-IMEG LLC

MBROH ENGINEERING
11757 KATY FWY,
SUITE 625
HOUSTON, TX 77077
713-468-2545

INTERIM REVIEW DOCUMENTS

NOT INTENDED FOR BIDDING, PERMIT OR CONSTRUCTION PURPOSES.

JOHN D. MISCHKOT
TEXAS REGISTRATION No: 107566
DATE: 11/02/2026

SURVEYED BY:

FB NO.

CITY OF HOUSTON
HOUSTON PUBLIC WORKS

WHITE OAKS WWTP IMPROVEMENTS

STRUCTURAL

BLOWER BUILDING FOUNDATION PLAN

WBS NUMBER	FOR CITY OF HOUSTON USE ONLY
R-000265-0158-3	
DRAWING SCALE	
As indicated	
CITY OF HOUSTON, PM	
SHAHIDUR RAHMAN, PE	
SHEET NO. 48 OF 189	

S-12

Autodesk Docs://White Oaks Wastewater Treatment Plant Improvements/20031-20-S_RVT25.rvt

11/2/2026 7:41:05 PM

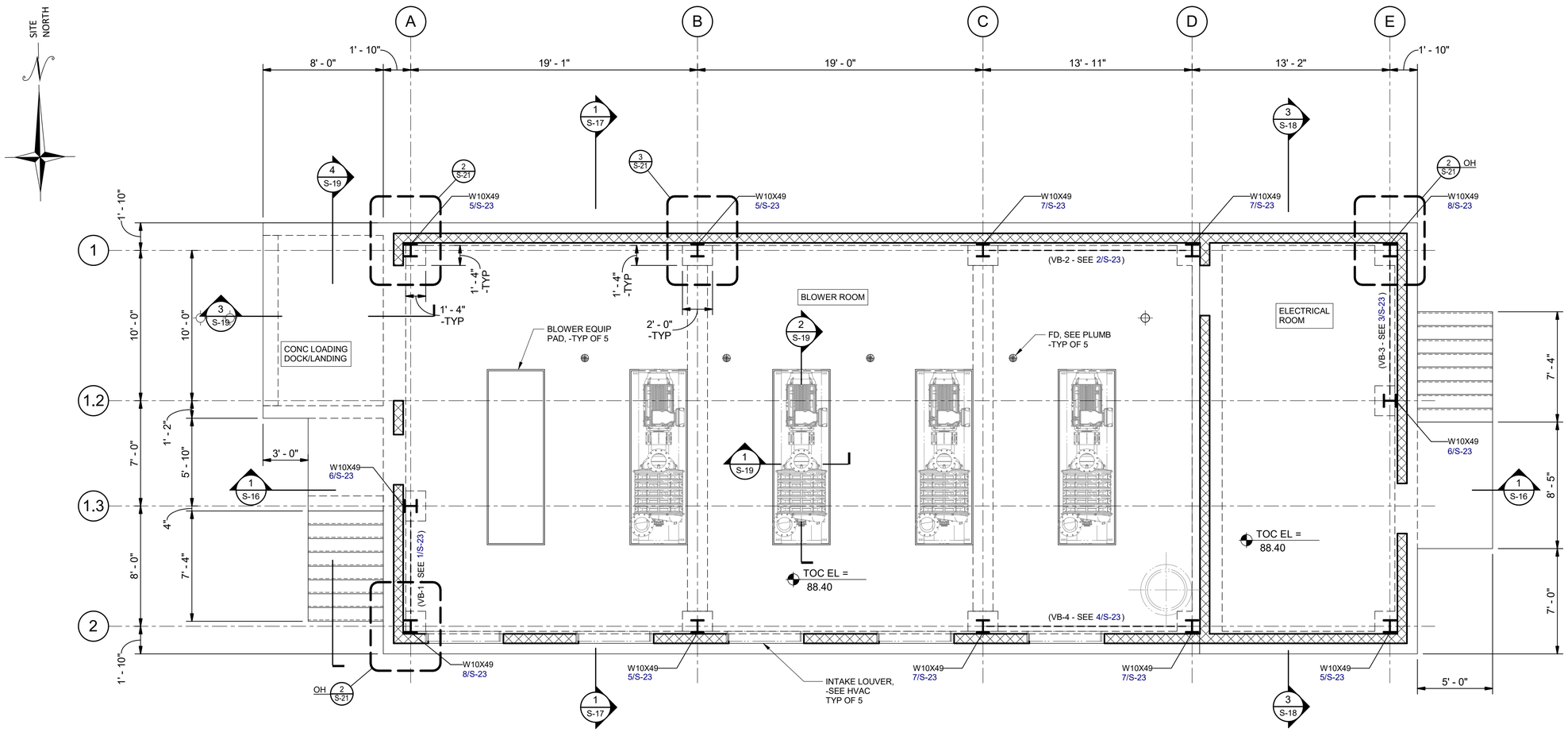

BLOWER BUILDING

PLAN

1/4" = 1'-0"

PLAN NOTES:

1. TOP OF STRUCTURAL CONCRETE ELEVATION = FINISH FLOOR = 5'-0" ON ARCHITECTURAL DRAWINGS.
2. REFER TO THE CIVIL DRAWINGS FOR STATION AND SITE LOCATION INFORMATION.
3. THE CONTRACTOR SHALL COORDINATE ALL ELECTRICAL, PIPING, AND HVAC PENETRATIONS IN THE STRUCTURE PRIOR TO CONSTRUCTION. PIPING AND EQUIPMENT INFORMATION SHOWN ON THIS PLAN ARE FOR GENERAL INFORMATION ONLY AS IT RELATES TO THE STRUCTURE.
4. VB-0# INDICATES VERTICAL BRACE. FOR VERTICAL BRACE ELEVATION VIEW SEE DETAILS ON SHEET S-23

NO.	DATE	REVISION	APP.

JQ-IMEG
100 GLASS STREET
SUITE 202
DALLAS, TX 75207
P: 972.392.7340
TBPELS FIRM F-26651

PROJECT NUMBER : 26021466.00

JQ-IMEG RESERVES PROPRIETARY RIGHTS, INCLUDING COPYRIGHTS, TO THIS DOCUMENT AND ANY PART THEREOF. THIS DOCUMENT IS THE EXCLUSIVE PROPERTY OF JQ-IMEG AND SHALL NOT BE USED OR REPRODUCED FOR ANY OTHER PROJECT WITHOUT THE EXPRESS WRITTEN APPROVAL AND PARTICIPATION OF JQ-IMEG. ©2026 JQ-IMEG LLC

MBROH 20 ENGINEERING
11757 KATY FWY,
SUITE 625
HOUSTON, TX 77077
713-468-2545

SURVEYED BY:

FB NO.

INTERIM REVIEW DOCUMENTS

(NOT INTENDED FOR BIDDING, PERMIT OR CONSTRUCTION PURPOSES)

JOHN D. MISCHKOT
TEXAS REGISTRATION No: 107566
DATE: 11/02/2026

CITY OF HOUSTON
HOUSTON PUBLIC WORKS

WHITE OAKS WWTP IMPROVEMENTS

STRUCTURAL

BLOWER BUILDING INTERMEDIATE PLAN AT 88.40

WBS NUMBER	FOR CITY OF HOUSTON USE ONLY
R-000265-0158-3	
DRAWING SCALE	
As indicated	
CITY OF HOUSTON, PM	
SHAHIDUR RAHMAN, PE	
SHEET NO. 49 OF 189	

S-13

Autodesk Docs://White Oaks Wastewater Treatment Plant Improvements/20031-20-S_RVT25.rvt

11/2/2026 7:41:06 PM



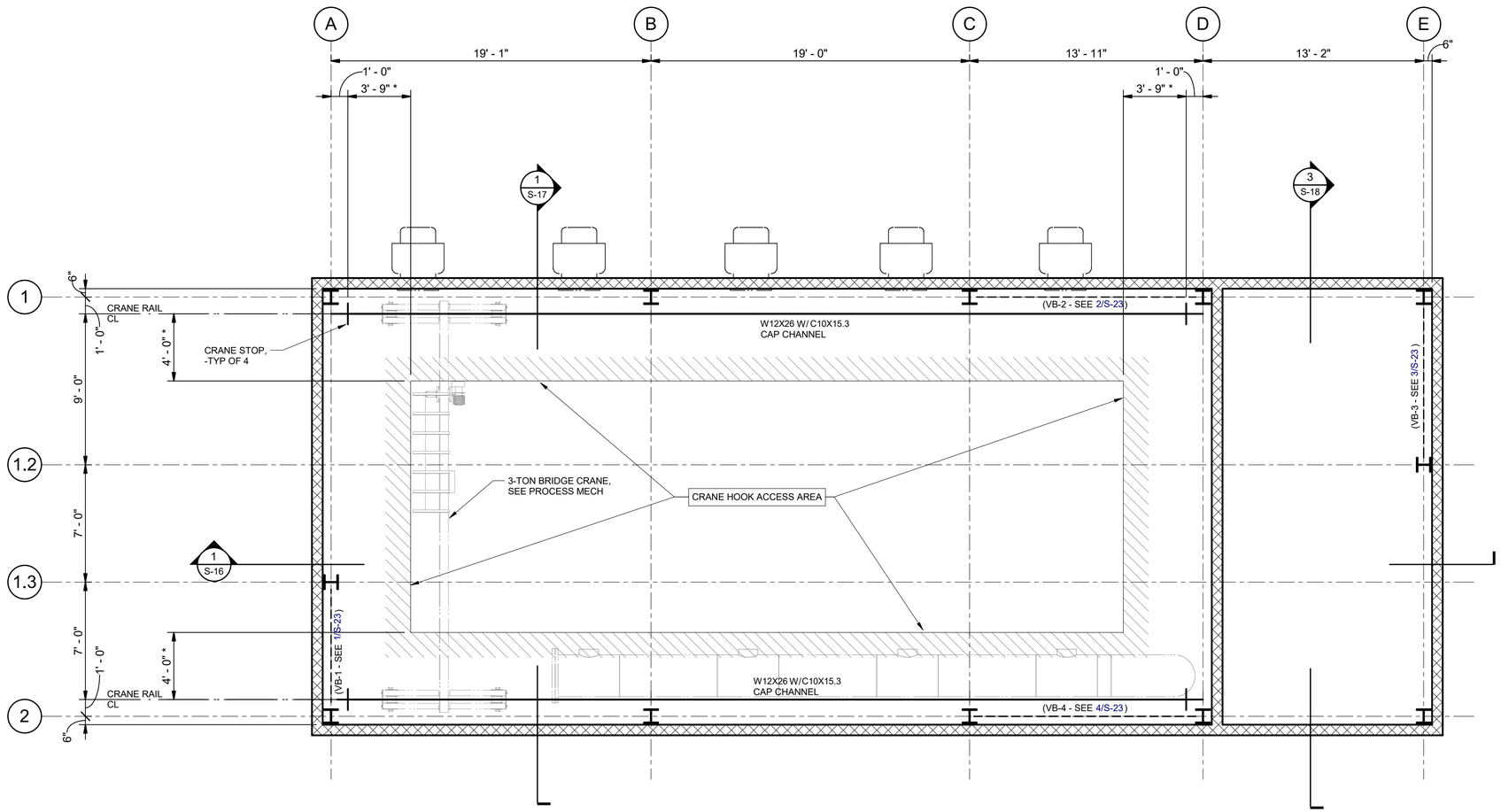

BRIDGE CRANE

PLAN

1/4" = 1'-0"

PLAN NOTES:

1. CRANE HOOK ACCESS AREA SHALL BE COORDINATED WITH CRANE SUPPLIER. DIMENSIONS SHOWN AS "*" ARE BASED ON PRELIMINARY INFORMATION FROM CRANE MANUFACTURERS DURING DESIGN.
2. TOP OF STEEL ELEVATION (TOS) = TOP OF ASCE CRANE RAIL.
3. VB-0# INDICATES VERTICAL BRACE. FOR VERTICAL BRACE ELEVATION VIEW SEE DETAILS ON SHEET S-23

NO.	DATE	REVISION	APP.

JQ-IMEG
100 GLASS STREET
SUITE 202
DALLAS, TX 75207
P: 972.392.7340
TBPELS FIRM F-26651

PROJECT NUMBER : 26021466.00

JQ-IMEG RESERVES PROPRIETARY RIGHTS, INCLUDING COPYRIGHTS, TO THIS DRAWING AND THE DATA SHOWN THEREON. SAID DRAWING AND/OR DATA ARE THE EXCLUSIVE PROPERTY OF JQ-IMEG AND SHALL NOT BE USED OR REPRODUCED FOR ANY PURPOSE WITHOUT THE EXPRESS WRITTEN APPROVAL AND PARTICIPATION OF JQ-IMEG. ©2026 JQ-IMEG LLC

MBROH 20
ENGINEERING
11757 KATY FWY,
SUITE 625
HOUSTON, TX 77077
713-468-2545

SURVEYED BY:

FB NO.

INTERIM REVIEW DOCUMENTS

NOT INTENDED FOR BIDDING, PERMIT OR CONSTRUCTION PURPOSES)

JOHN D. MISCHKOT
TEXAS REGISTRATION No: 107566
DATE: 11/02/2026

CITY OF HOUSTON
HOUSTON PUBLIC WORKS

WHITE OAKS
WWTP IMPROVEMENTS

STRUCTURAL

BRIDGE CRANE FRAMING PLAN

WBS NUMBER	FOR CITY OF HOUSTON USE ONLY
R-000265-0158-3	
DRAWING SCALE	
As indicated	
CITY OF HOUSTON, PM	
SHAHIDUR RAHMAN, PE	
SHEET NO. 50 OF 189	

S-14

Autodesk Docs://White Oaks Wastewater Treatment Plant Improvements/20031-20-S_RVT25.rvt

11/2/2026 7:41:07 PM

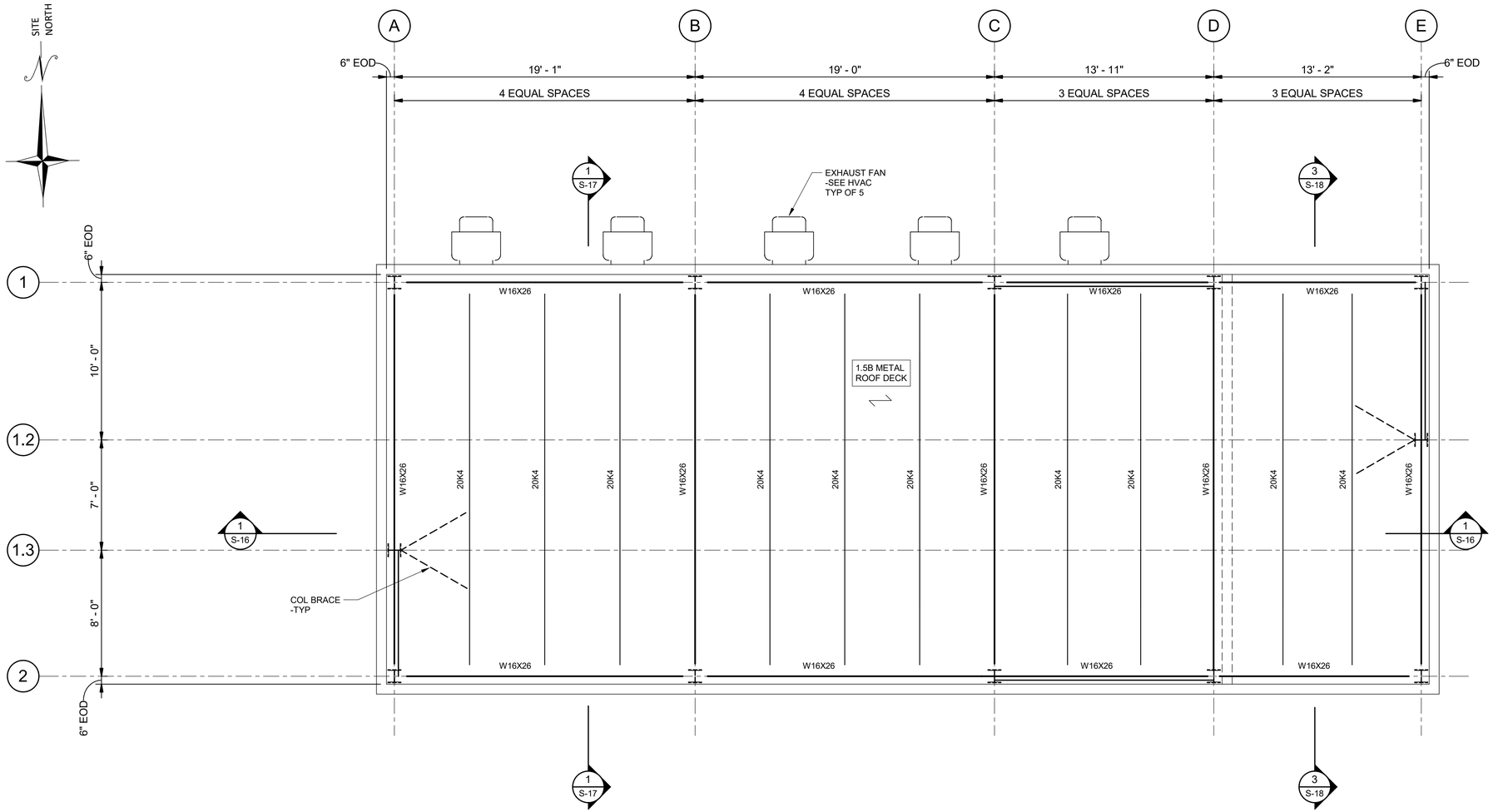

BLOWER BUILDING

PLAN

1/4" = 1'-0"

PLAN NOTES:

1. TOP OF STEEL ELEVATION = TOP OF BEAM, JOIST, OR MEMBER SUPPORTING ROOF DECK = BOTTOM OF ROOF DECK.
2. REFER TO MECHANICAL, ELECTRICAL, ARCHITECTURAL, AND PLUMBING DRAWINGS FOR LOCATION AND DIMENSIONS OF ROOF PENETRATIONS NOT SHOWN ON PLAN. CONTRACTOR SHALL COORDINATE WITH THE OTHER DISCIPLINES DRAWINGS.
3. " ⟍ " INDICATED DECK SPAN DIRECTION.

NO.	DATE	REVISION	APP.

JQ-IMEG
100 GLASS STREET
SUITE 202
DALLAS, TX 75207
P: 972.392.7340
TBPELS FIRM F-26651

PROJECT NUMBER : 26021466.00

JQ-IMEG RETAINS PROPRIETARY RIGHTS, INCLUDING COPYRIGHTS, TO THIS ELECTRONIC DRAWING AND ITS CONTENTS. CAD DRAWING AND DATA ARE EXCLUSIVE PROPERTY OF JQ-IMEG AND SHALL NOT BE USED OR REPRODUCED FOR ANY OTHER PROJECT WITHOUT THE EXPRESS WRITTEN APPROVAL AND PARTICIPATION OF JQ-IMEG. ©2026 JQ-IMEG LLC

MBROH ENGINEERING
11757 KATY FWY,
SUITE 625
HOUSTON, TX 77077
713-468-2545

INTERIM REVIEW DOCUMENTS

(NOT INTENDED FOR BIDDING, PERMIT OR CONSTRUCTION PURPOSES)

JOHN D. MISCHKOT
TEXAS REGISTRATION No: 107566
DATE: 11/02/2026

SURVEYED BY:

FB NO.

CITY OF HOUSTON

HOUSTON PUBLIC WORKS

WHITE OAKS WWTP IMPROVEMENTS

STRUCTURAL

ROOF FRAMING PLAN

WBS NUMBER	FOR CITY OF HOUSTON USE ONLY
R-000265-0158-3	
DRAWING SCALE	
As indicated	
CITY OF HOUSTON, PM	
SHAHIDUR RAHMAN, PE	

S-15 SHEET NO. 51 OF 189

Autodesk Docs://White Oaks Wastewater Treatment Plant Improvements/20031-20-S_RVT25.rvt

11/2/2026 7:41:16 PM

NO.	DATE	REVISION	APP.

A B C D E

1' - 4" 19' - 1" 19' - 0" 13' - 11" 1' - 2" 12' - 0" 1' - 4"

6" 6"

OH 2 S-24

1 S-24

2 S-24

METAL ROOF DECK - SEE PLAN

TOS EL = 111.78

STL JOISTS - SEE PLAN

STL BEAM - SEE PLAN

CMU WALL -TYP

BLOWER ROOM

ELECTRICAL ROOM

1 S-20

BLOWER EQUIP PAD, -TYP OF 5

1 S-19

2 S-20

3 S-20

10"

TOC EL = 88.90

10"

COMPACTED FILL

COMPACTED FILL -TYP

CLSM FILL

TO FTG EL = 79.50

2' - 0"

UNDISTURBED SUBGRADE

1' - 3" 1' - 6" 1' - 3" 4' - 3" 3' - 8" 5' - 10" 3' - 8" 5' - 10" 3' - 8" 5' - 10" 3' - 8" 5' - 10" 3' - 8" 4' - 5" 9" 2' - 0" 1' - 3" 9' - 0" 1' - 3" 1' - 6" 1' - 3"

OVERALL

SECTION 1 S-12

SCALE: 3/8" = 1'-0"

Autodesk Docs://White Oaks Wastewater Treatment Plant Improvements/20031-20-S_RVT25.rvt

JQ-IMEG 100 GLASS STREET SUITE 202 DALLAS, TX 75207 P: 972.392.7340 TBPELS FIRM F-26651

PROJECT NUMBER : 26021466.00

JQ-IMEG RESERVES PROPRIETARY RIGHTS, INCLUDING COPYRIGHTS, TO THIS DRAWING AND ITS ELECTRONIC FILES. SAID DRAWINGS AND FILES ARE THE EXCLUSIVE PROPERTY OF JQ-IMEG AND SHALL NOT BE USED OR REPRODUCED FOR ANY OTHER PROJECT WITHOUT THE EXPRESS WRITTEN APPROVAL AND PARTICIPATION OF JQ-IMEG. ©2026 JQ-IMEG LLC

MBROH ENGINEERING 20

11757 KATY FWY, SUITE 625 HOUSTON, TX 77077

713-468-2545

INTERIM REVIEW DOCUMENTS

(NOT INTENDED FOR BIDDING, PERMIT OR CONSTRUCTION PURPOSES)

JOHN D. MISCHKOT TEXAS REGISTRATION No: 107566 DATE: 11/02/2026

SURVEYED BY:

FB NO.

CITY OF HOUSTON

HOUSTON PUBLIC WORKS

WHITE OAKS WWTP IMPROVEMENTS

STRUCTURAL

OVERALL SECTION I

WBS NUMBER	FOR CITY OF HOUSTON USE ONLY
R-000265-0158-3	
DRAWING SCALE	
3/8" = 1'-0"	
CITY OF HOUSTON, PM	
SHAHIDUR RAHMAN, PE	

S-16

SHEET NO. 52 OF 189

11/2/2026 7:41:19 PM

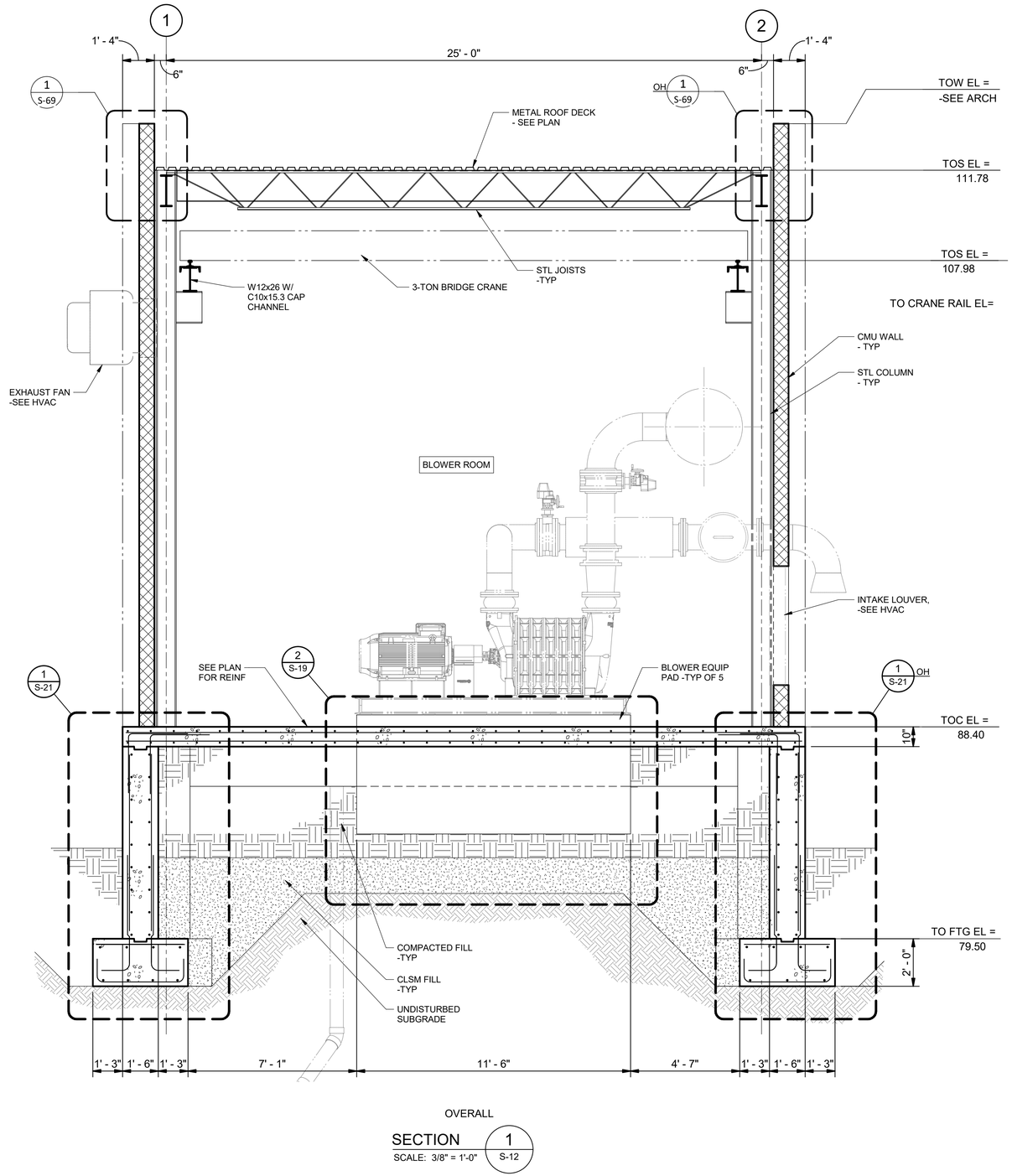

OVERALL

SECTION 1 / S-12

SCALE: 3/8" = 1'-0"

NO.	DATE	REVISION	APP.

JQ-IMEG
100 GLASS STREET
SUITE 202
DALLAS, TX 75207
P: 972.392.7340
TBPELS FIRM F-26651

PROJECT NUMBER : 26021466.00

JQ-IMEG RESERVES PROPRIETARY RIGHTS, INCLUDING COPYRIGHTS, TO THIS DRAWING AND THE DATA SHOWN THEREON. SAID DRAWING AND/OR DATA ARE THE EXCLUSIVE PROPERTY OF JQ-IMEG AND SHALL NOT BE USED OR REPRODUCED FOR ANY PURPOSE WITHOUT THE EXPRESS WRITTEN APPROVAL AND PARTICIPATION OF JQ-IMEG. ©2026 JQ-IMEG LLC

MBROH ENGINEERING
11757 KATY FWY,
SUITE 625
HOUSTON, TX 77077
713-468-2545

SURVEYED BY:

FB NO.

INTERIM REVIEW DOCUMENTS

NOT INTENDED FOR BIDDING, PERMIT OR CONSTRUCTION PURPOSES)

JOHN D. MISCHKOT
TEXAS REGISTRATION No: 107566
DATE: 11/02/2026

CITY OF HOUSTON
HOUSTON PUBLIC WORKS

WHITE OAKS
WWTP IMPROVEMENTS

STRUCTURAL

OVERALL SECTION II

WBS NUMBER	FOR CITY OF HOUSTON USE ONLY
R-000265-0158-3	
DRAWING SCALE	
3/8" = 1'-0"	
CITY OF HOUSTON, PM	
SHAHIDUR RAHMAN, PE	

S-17 SHEET NO. 53 OF 189

Autodesk Docs://White Oaks Wastewater Treatment Plant Improvements/20031-20-S_RVT25.rvt

11/2/2026 7:41:20 PM

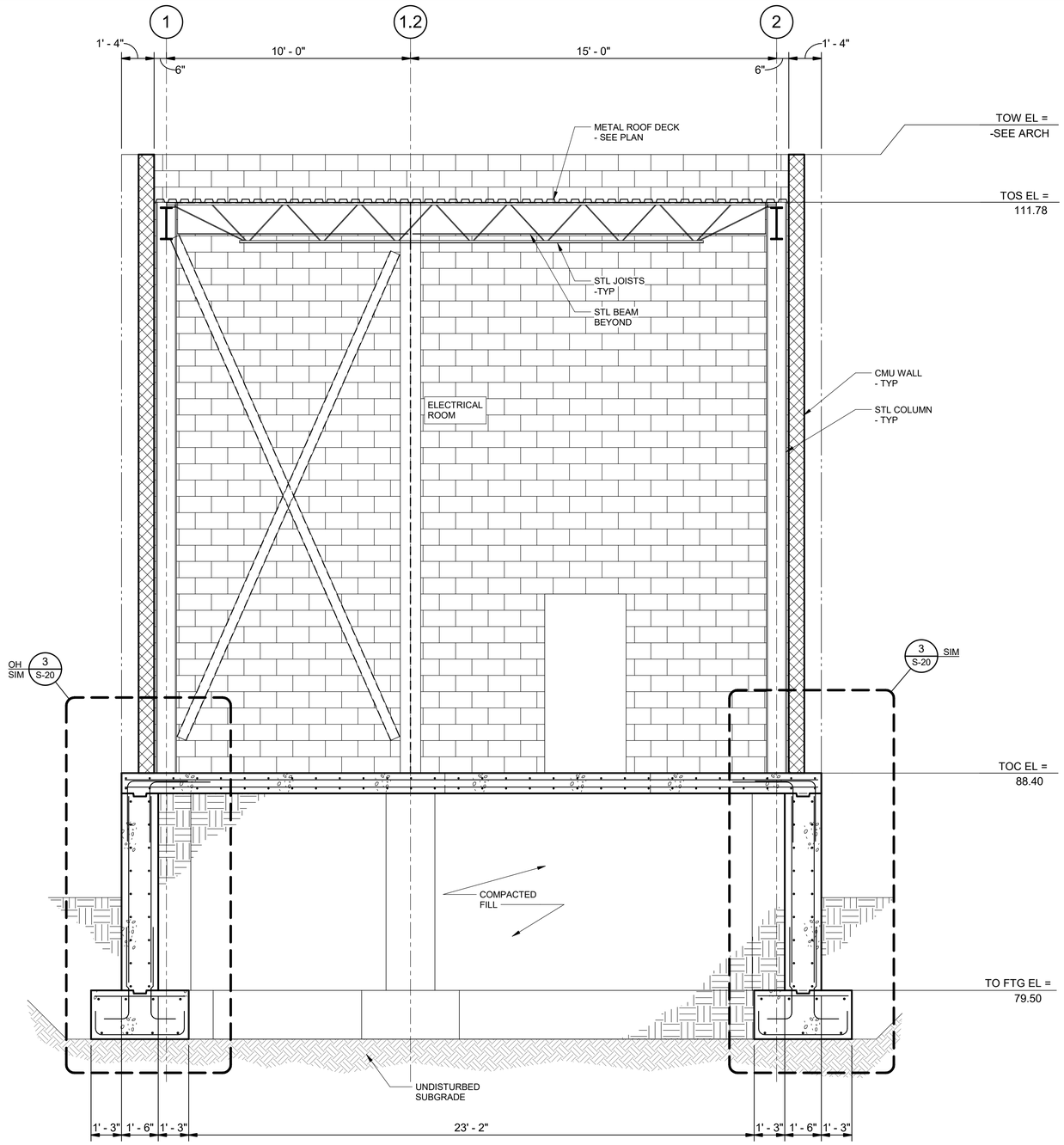

OVERALL

SECTION 3 / S-12

SCALE: 3/8" = 1'-0"

NO.	DATE	REVISION	APP.

JQ-IMEG
100 GLASS STREET
SUITE 202
DALLAS, TX 75207
P: 972.392.7340
TBPELS FIRM F-26651

PROJECT NUMBER : 26021466.00

JQ-IMEG RESERVES PROPRIETARY RIGHTS, INCLUDING COPYRIGHTS, TO THIS DOCUMENT AND ANY DATA STORED ON ELECTRONIC MEDIA. SUCH DATA ARE THE EXCLUSIVE PROPERTY OF JQ-IMEG AND SHALL NOT BE USED OR REPRODUCED FOR ANY OTHER PROJECT WITHOUT THE EXPRESS WRITTEN APPROVAL AND PARTICIPATION OF JQ-IMEG. ©2026 JQ-IMEG LLC

MBROH ENGINEERING
11757 KATY FWY,
SUITE 625
HOUSTON, TX 77077
713-468-2545

INTERIM REVIEW DOCUMENTS

(NOT INTENDED FOR BIDDING, PERMIT OR CONSTRUCTION PURPOSES)

JOHN D. MISCHKOT
TEXAS REGISTRATION No: 107566
DATE: 11/02/2026

SURVEYED BY:

FB NO.

CITY OF HOUSTON
HOUSTON PUBLIC WORKS

WHITE OAKS WWTP IMPROVEMENTS

STRUCTURAL

OVERALL SECTION III

WBS NUMBER	FOR CITY OF HOUSTON USE ONLY
R-000265-0158-3	
DRAWING SCALE	
3/8" = 1'-0"	
CITY OF HOUSTON, PM	
SHAHIDUR RAHMAN, PE	
SHEET NO. 54 OF 189	

S-18

Autodesk Docs://White Oaks Wastewater Treatment Plant Improvements/20031-20-S_RVT25.rvt

11/2/2026 7:41:27 PM

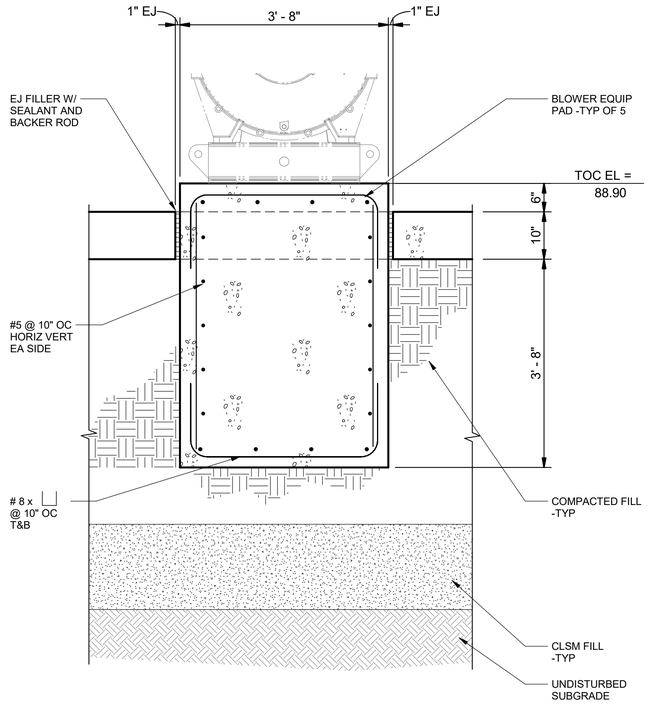

SECTION

SECTION 1
SCALE: 3/4" = 1'-0" S-13

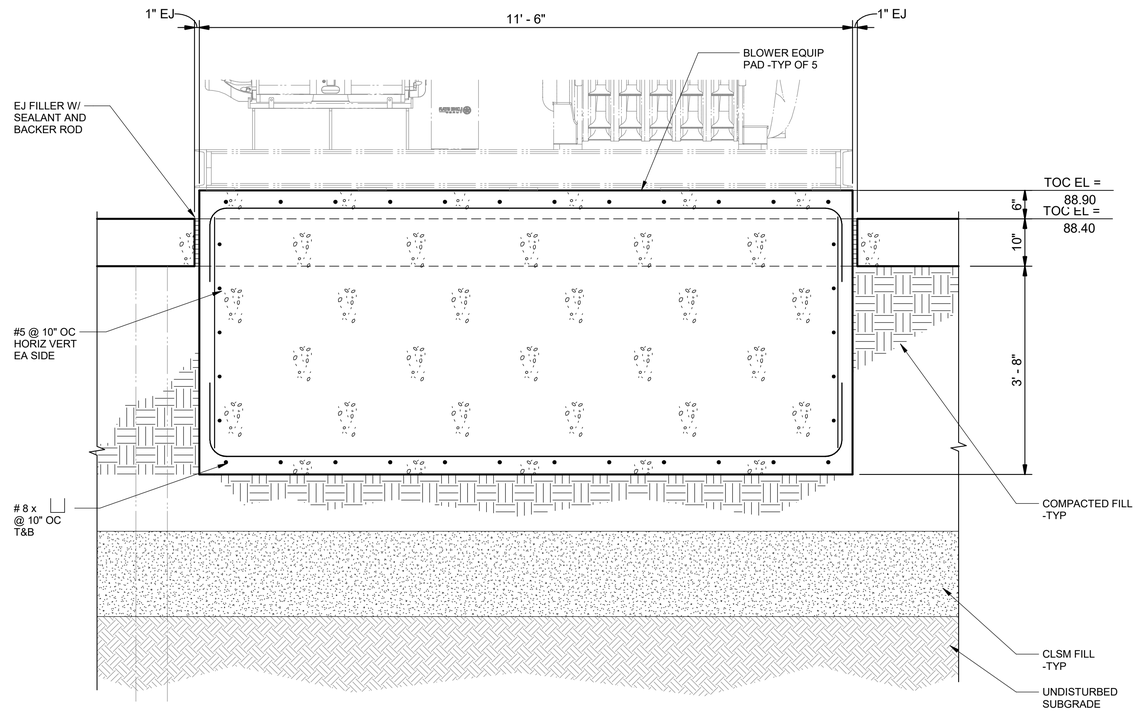

SECTION

SECTION 2
SCALE: 3/4" = 1'-0" S-13

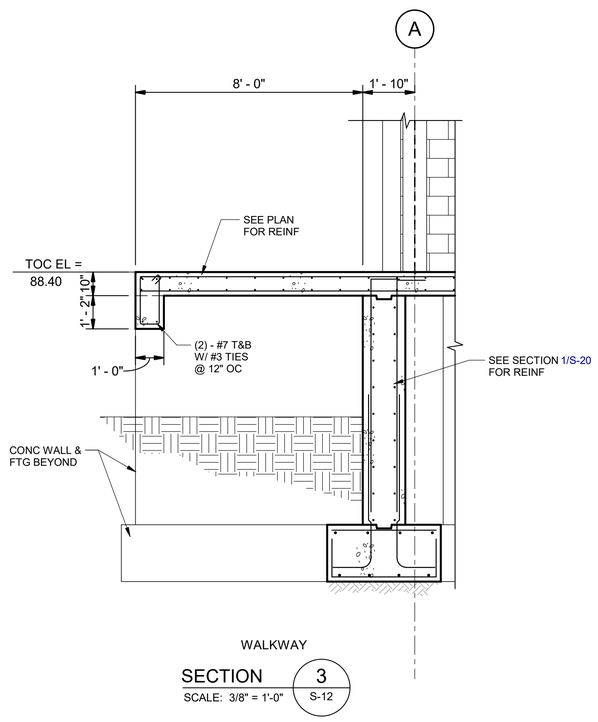

SECTION 3
SCALE: 3/8" = 1'-0" S-12

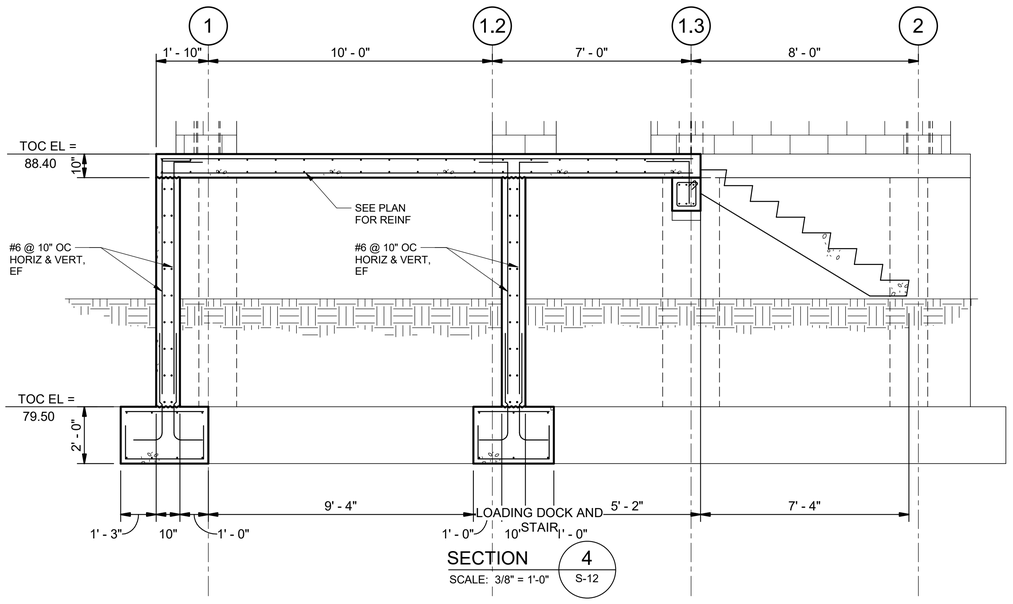

SECTION 4
SCALE: 3/8" = 1'-0" S-12

NO.	DATE	REVISION	APP.

JQ-IMEG
100 GLASS STREET
SUITE 202
DALLAS, TX 75207
P: 972.392.7340
TBPELS FIRM F-26651
PROJECT NUMBER : 26021466.00

JQ-IMEG RESERVES PROPRIETARY RIGHTS, INCLUDING COPYRIGHTS, TO THIS DOCUMENT AND ANY DATA STORED ON ELECTRONIC MEDIA. ALL DATA ARE THE EXCLUSIVE PROPERTY OF JQ-IMEG AND SHALL NOT BE USED OR REDUCED FOR ANY OTHER PROJECT WITHOUT THE EXPRESS WRITTEN APPROVAL AND PARTICIPATION OF JQ-IMEG. ©2026 JQ-IMEG LLC

MBROH ENGINEERING
11757 KATY FWY,
SUITE 625
HOUSTON, TX 77077
713-468-2545

SURVEYED BY:

FB NO.

INTERIM REVIEW DOCUMENTS
NOT INTENDED FOR BIDDING, PERMIT OR CONSTRUCTION PURPOSES)
JOHN D. MISCHKOT
TEXAS REGISTRATION No: 107566
DATE: 11/02/2026

CITY OF HOUSTON
HOUSTON PUBLIC WORKS

WHITE OAKS WWTP IMPROVEMENTS

STRUCTURAL

CONCRETE SECTIONS AND DETAILS I

WBS NUMBER	FOR CITY OF HOUSTON USE ONLY
R-000265-0158-3	
DRAWING SCALE	
As indicated	
CITY OF HOUSTON, PM	
SHAHIDUR RAHMAN, PE	
SHEET NO. 55 OF 189	

S-19

Autodesk Docs://White Oaks Wastewater Treatment Plant Improvements/20031-20-S_RVT25.rvt

11/2/2026 7:41:29 PM

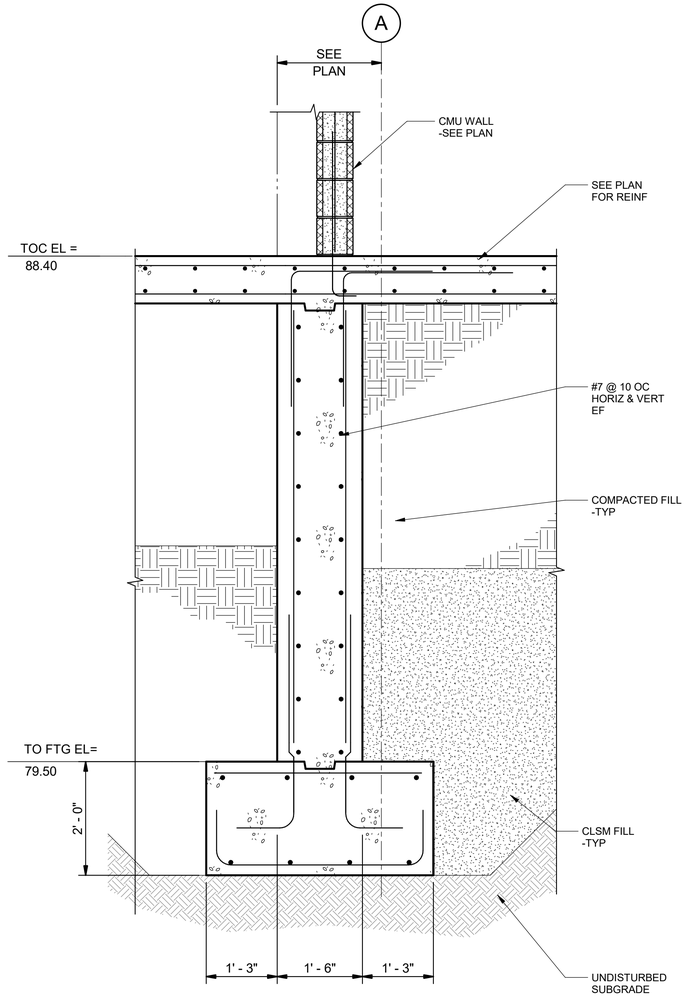

SECTION

SECTION 1
SCALE: 3/4" = 1'-0" S-16

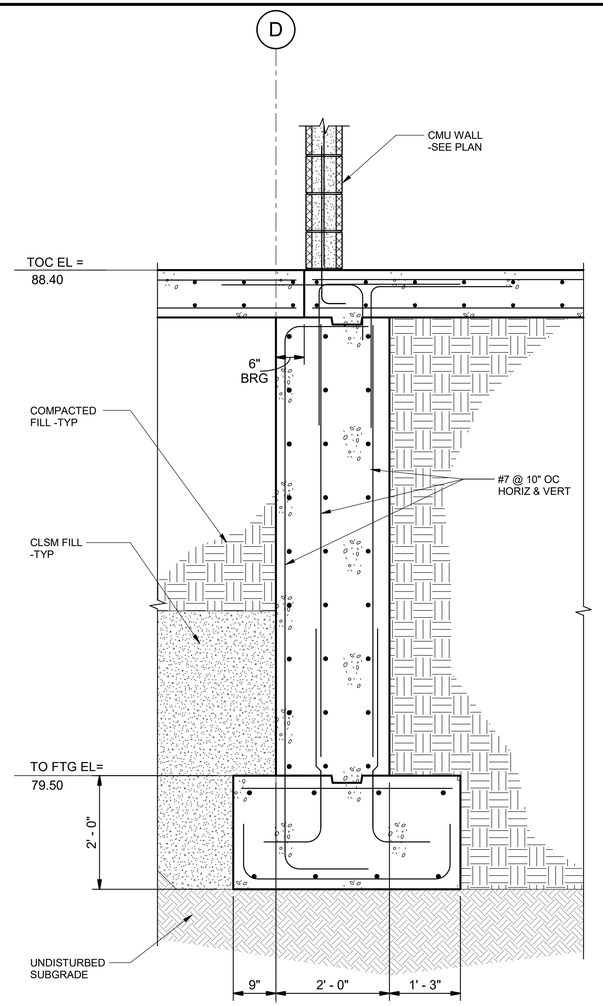

SECTION

SECTION 2
SCALE: 3/4" = 1'-0" S-16

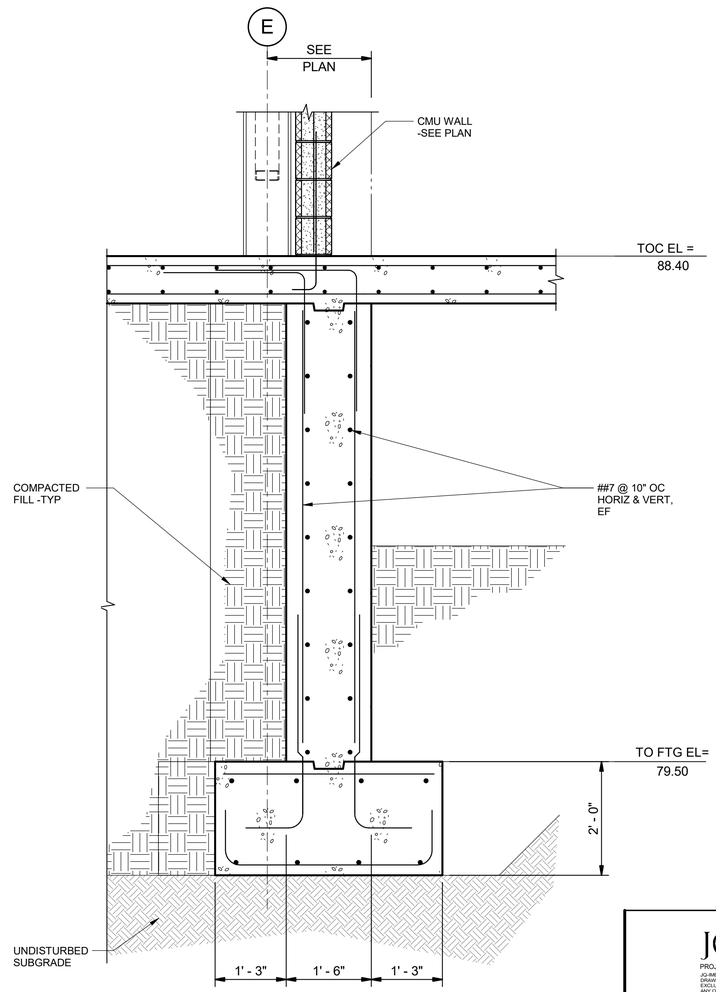

SECTION

SECTION 3
SCALE: 3/4" = 1'-0" S-16

NO.	DATE	REVISION	APP.

JQ-IMEG
100 GLASS STREET
SUITE 202
DALLAS, TX 75207
P: 972.392.7340
TBPELS FIRM F-20651

PROJECT NUMBER : 26021466.00

JQ-IMEG RESERVES PROPRIETARY RIGHTS, INCLUDING COPYRIGHTS, TO THIS DOCUMENT AND ANY DATA CONTAINED HEREIN. SUCH DOCUMENT OR DATA ARE THE EXCLUSIVE PROPERTY OF JQ-IMEG AND SHALL NOT BE USED OR REPRODUCED FOR ANY OTHER PROJECT WITHOUT THE EXPRESS WRITTEN APPROVAL AND PARTICIPATION OF JQ-IMEG. ©2026 JQ-IMEG LLC

MBROH ENGINEERING 20
11757 KATY FWY,
SUITE 625
HOUSTON, TX 77077
713-468-2545

SURVEYED BY:

FB NO.

INTERIM REVIEW DOCUMENTS
NOT INTENDED FOR BIDDING, PERMIT OR CONSTRUCTION PURPOSES)
JOHN D. MISCHKOT
TEXAS REGISTRATION No: 107566
DATE: 11/02/2026

CITY OF HOUSTON
HOUSTON PUBLIC WORKS

WHITE OAKS WWTP IMPROVEMENTS

STRUCTURAL

CONCRETE SECTIONS AND DETAILS II

WBS NUMBER	FOR CITY OF HOUSTON USE ONLY
R-000265-0158-3	
DRAWING SCALE	
3/4" = 1'-0"	
CITY OF HOUSTON, PM	
SHAHIDUR RAHMAN, PE	
SHEET NO. 56 OF 189	

S-20

Autodesk Docs://White Oaks Wastewater Treatment Plant Improvements/20031-20-S_RVT25.rvt

11/2/2026 7:41:30 PM

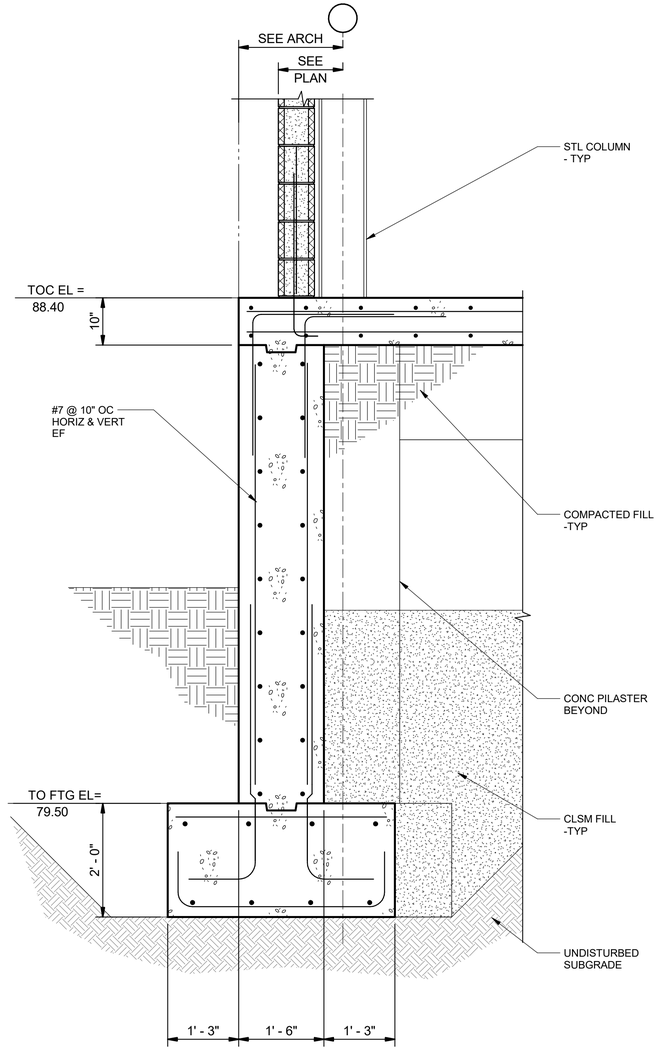

SECTION

SECTION 1 / S-17

SCALE: 3/4" = 1'-0"

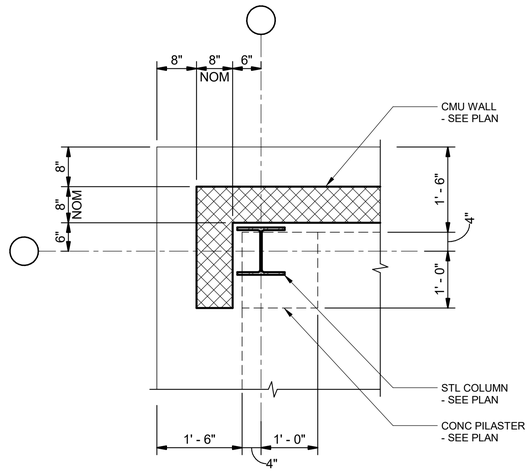

PLAN

SECTION 2 / S-13

SCALE: 3/4" = 1'-0"

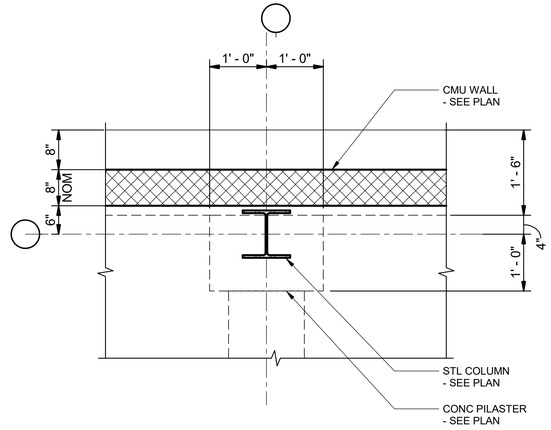

PLAN

SECTION 3 / S-13

SCALE: 3/4" = 1'-0"

JQ-IMEG
100 GLASS STREET
SUITE 202
DALLAS, TX 75207
P: 972.392.7340
TBPELS FIRM F-26651

PROJECT NUMBER : 26021466.00

JQ-IMEG RESERVES PROPRIETARY RIGHTS, INCLUDING COPYRIGHTS, TO THIS DRAWING AND THE DATA SHOWN THEREON. SAID DRAWING AND/OR DATA ARE THE EXCLUSIVE PROPERTY OF JQ-IMEG AND SHALL NOT BE USED OR REPRODUCED FOR ANY PURPOSE WITHOUT THE EXPRESS AND WRITTEN APPROVAL AND PARTICIPATION OF JQ-IMEG. ©2026 JQ-IMEG LLC

MBROH 20 ENGINEERING
11757 KATY FWY,
SUITE 625
HOUSTON, TX 77077
713-468-2545

SURVEYED BY:

FB NO.

INTERIM REVIEW DOCUMENTS

NOT INTENDED FOR BIDDING, PERMIT OR CONSTRUCTION PURPOSES)

JOHN D. MISCHKOT
TEXAS REGISTRATION No: 107566
DATE: 11/02/2026

CITY OF HOUSTON
HOUSTON PUBLIC WORKS

WHITE OAKS WWTP IMPROVEMENTS

STRUCTURAL

CONCRETE SECTIONS AND DETAILS III

WBS NUMBER	FOR CITY OF HOUSTON USE ONLY
R-000265-0158-3	
DRAWING SCALE	
3/4" = 1'-0"	
CITY OF HOUSTON, PM	
SHAHIDUR RAHMAN, PE	
SHEET NO. 57 OF 189	

S-21

NO.	DATE	REVISION	APP.

Autodesk Docs://White Oaks Wastewater Treatment Plant Improvements/20031-20-S_RVT25.rvt

11/2/2026 7:41:31 PM

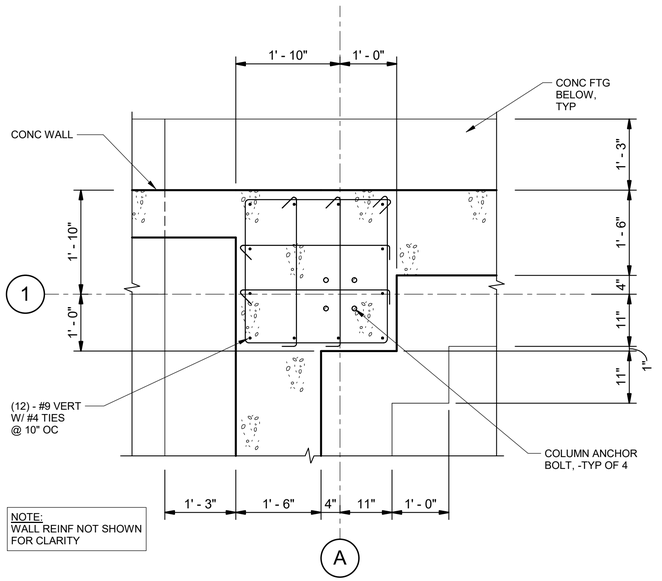

NOTE:
WALL REINF NOT SHOWN FOR CLARITY

PILASTER PLAN

SECTION 1
SCALE: 3/4" = 1'-0" S-12

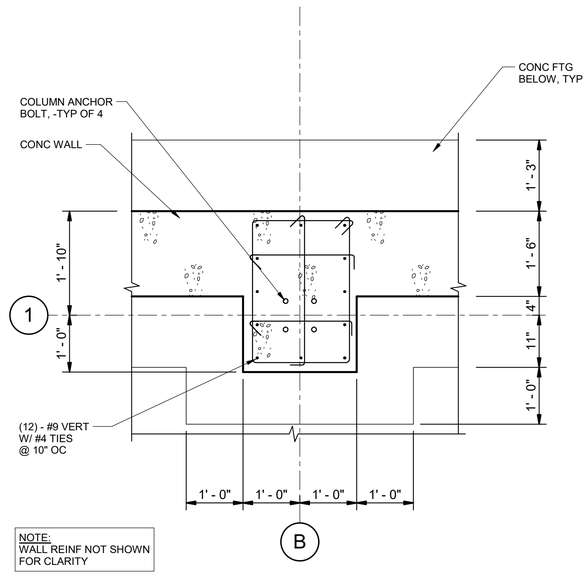

NOTE:
WALL REINF NOT SHOWN FOR CLARITY

PILASTER PLAN

SECTION 2
SCALE: 3/4" = 1'-0" S-12

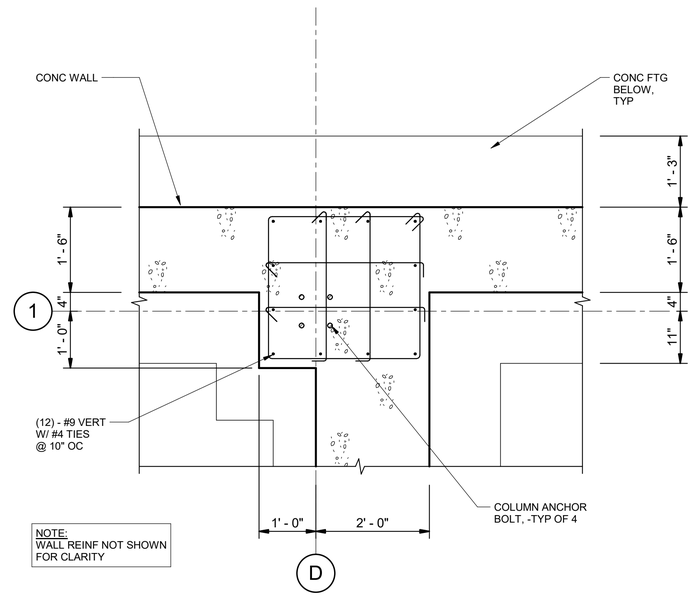

NOTE:
WALL REINF NOT SHOWN FOR CLARITY

PILASTER PLAN

SECTION 3
SCALE: 3/4" = 1'-0" S-12

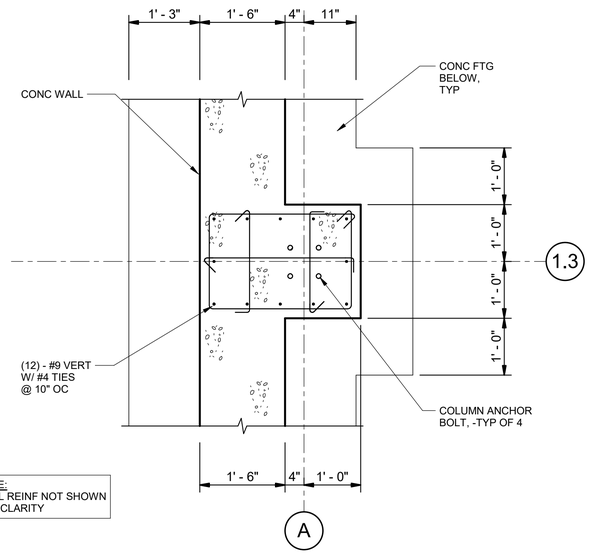

NOTE:
WALL REINF NOT SHOWN FOR CLARITY

PILASTER PLAN

SECTION 4
SCALE: 3/4" = 1'-0" S-12

NO.	DATE	REVISION	APP.

JQ-IMEG
100 GLASS STREET
SUITE 202
DALLAS, TX 75207
P: 972.392.7340
TBPELS FIRM F-26651

PROJECT NUMBER : 26021466.00

JQ-IMEG RESERVES PROPRIETARY RIGHTS, INCLUDING COPYRIGHTS, TO THIS DRAWING AND THE DATA SHOWN THEREON. SAID DRAWING AND/OR DATA ARE THE EXCLUSIVE PROPERTY OF JQ-IMEG AND SHALL NOT BE USED OR REPRODUCED FOR ANY OTHER PROJECT WITHOUT THE EXPRESS WRITTEN APPROVAL AND PARTICIPATION OF JQ-IMEG. ©2026 JQ-IMEG LLC

MBROH ENGINEERING
11757 KATY FWY,
SUITE 625
HOUSTON, TX 77077
713-468-2545

SURVEYED BY:
FB NO.

INTERIM REVIEW DOCUMENTS
NOT INTENDED FOR BIDDING, PERMIT OR CONSTRUCTION PURPOSES)

JOHN D. MISCHKOT
TEXAS REGISTRATION No: 107566
DATE: 11/02/2026

CITY OF HOUSTON
HOUSTON PUBLIC WORKS

WHITE OAKS WWTP IMPROVEMENTS

STRUCTURAL

CONCRETE SECTIONS AND DETAILS IV

WBS NUMBER	FOR CITY OF HOUSTON USE ONLY
R-000265-0158-3	
DRAWING SCALE	
3/4" = 1'-0"	
CITY OF HOUSTON, PM	
SHAHIDUR RAHMAN, PE	
SHEET NO. 58 OF 189	

S-22

Autodesk Docs://White Oaks Wastewater Treatment Plant Improvements/20031-20-5_RVT25.rvt

11/2/2026 7:41:33 PM

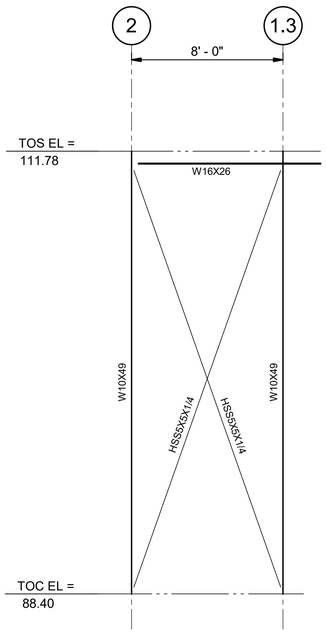

VERTICAL BRACE - VB-1

DETAIL 1
SCALE: 1/4" = 1'-0"

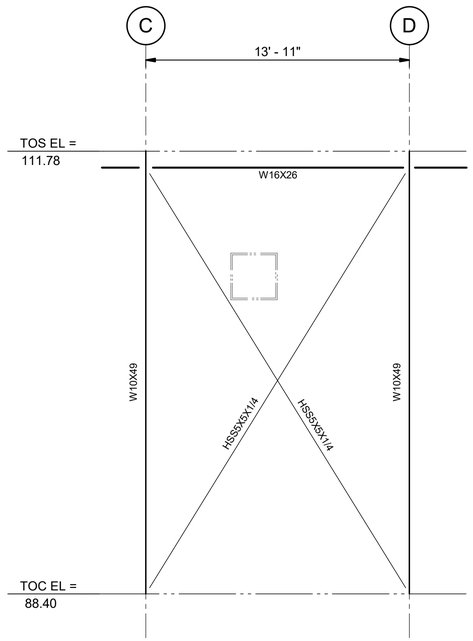

VERTICAL BRACE - VB-2

DETAIL 2
SCALE: 1/4" = 1'-0"

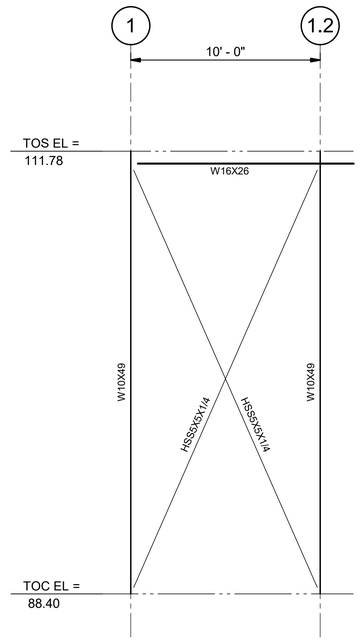

VERTICAL BRACE - VB-3

DETAIL 3
SCALE: 1/4" = 1'-0"

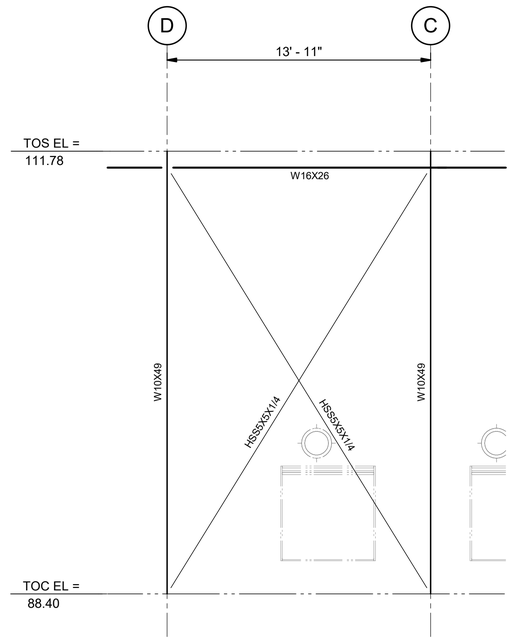

VERTICAL BRACE - VB-4

DETAIL 4
SCALE: 1/4" = 1'-0"

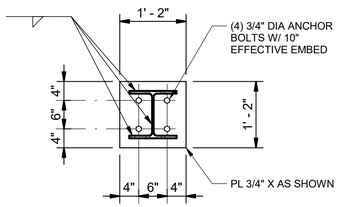

BASE PLATE DETAIL

DETAIL 5
SCALE: 3/4" = 1'-0"

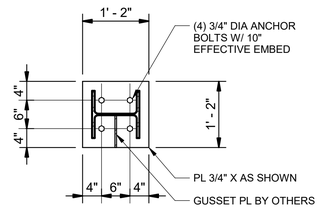

BASE PLATE DETAIL

DETAIL 6
SCALE: 3/4" = 1'-0"

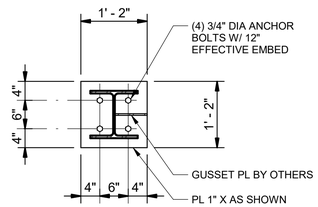

BASE PLATE DETAIL

DETAIL 7
SCALE: 3/4" = 1'-0"

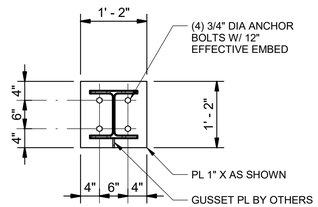

BASE PLATE DETAIL

DETAIL 8
SCALE: 3/4" = 1'-0"

NO.	DATE	REVISION	APP.

JQ-IMEG
100 GLASS STREET
SUITE 202
DALLAS, TX 75207
P: 972.392.7340
TBPELS FIRM F-26651

PROJECT NUMBER : 26021466.00

JQ-IMEG RESERVES PROPRIETARY RIGHTS, INCLUDING COPYRIGHTS, TO THIS DRAWING AND THE DATA SHOWN THEREON. SAID DRAWING AND/OR DATA ARE THE PROPERTY OF JQ-IMEG AND SHALL NOT BE USED OR REPRODUCED FOR ANY OTHER PROJECT WITHOUT THE EXPRESS WRITTEN APPROVAL AND PARTICIPATION OF JQ-IMEG. ©2026 JQ-IMEG LLC

MBROH 20
ENGINEERING
11757 KATY FWY,
SUITE 625
HOUSTON, TX 77077
713-468-2545

INTERIM REVIEW DOCUMENTS
(NOT INTENDED FOR BIDDING, PERMIT OR CONSTRUCTION PURPOSES)

JOHN D. MISCHKOT
TEXAS REGISTRATION No: 107566
DATE: 11/02/2026

SURVEYED BY:

FB NO.

CITY OF HOUSTON
HOUSTON PUBLIC WORKS

WHITE OAKS WWTP IMPROVEMENTS

STRUCTURAL

STEEL SECTIONS AND DETAILS I

WBS NUMBER	FOR CITY OF HOUSTON USE ONLY
R-000265-0158-3	
DRAWING SCALE	
As indicated	
CITY OF HOUSTON, PM	
SHAHIDUR RAHMAN, PE	

S-23

Autodesk Docs://White Oaks Wastewater Treatment Plant Improvements/20031-20-5_RVT25.rvt

11/2/2026 7:41:34 PM

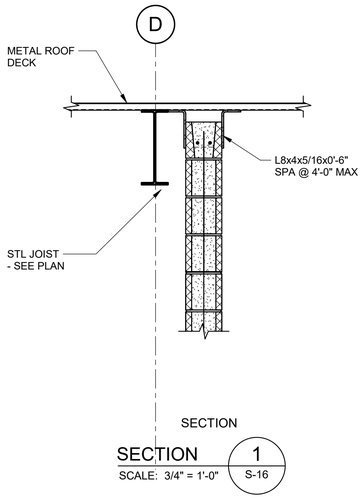

SECTION

SECTION 1
SCALE: 3/4" = 1'-0" S-16

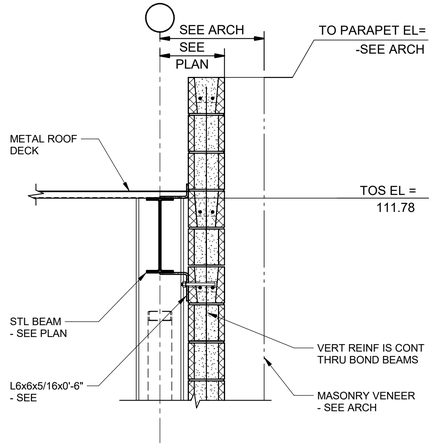

SECTION

SECTION 2
SCALE: 3/4" = 1'-0" S-16

NO.	DATE	REVISION	APP.

JQ-IMEG
100 GLASS STREET
SUITE 202
DALLAS, TX 75207
P: 972.392.7340
TBPELS FIRM F-26651

PROJECT NUMBER : 26021466.00

JQ-IMEG RESERVES PROPRIETARY RIGHTS, INCLUDING COPYRIGHTS, TO THIS DRAWING AND THE DATA SHOWN THEREON. SAID DRAWING AND/OR DATA ARE THE PROPERTY OF JQ-IMEG AND SHALL NOT BE USED OR REPRODUCED FOR ANY OTHER PROJECT WITHOUT THE EXPRESS WRITTEN APPROVAL AND PARTICIPATION OF JQ-IMEG. ©2026 JQ-IMEG LLC

MBROH 20
ENGINEERING
11757 KATY FWY,
SUITE 625
HOUSTON, TX 77077
713-468-2545

SURVEYED BY:

FB NO.

INTERIM REVIEW DOCUMENTS

(NOT INTENDED FOR BIDDING, PERMIT OR CONSTRUCTION PURPOSES)

JOHN D. MISCHKOT
TEXAS REGISTRATION No: 107566
DATE: 11/02/2026

CITY OF HOUSTON
HOUSTON PUBLIC WORKS

WHITE OAKS
WWTP IMPROVEMENTS

STRUCTURAL

STEEL SECTIONS AND DETAILS II

WBS NUMBER	FOR CITY OF HOUSTON USE ONLY
R-000265-0158-3	
DRAWING SCALE	
3/4" = 1'-0"	
CITY OF HOUSTON, PM	
SHAHIDUR RAHMAN, PE	

S-24

SHEET NO. 60 OF 189

Autodesk Docs://White Oaks Wastewater Treatment Plant Improvements/20031-20-5_RVT25.rvt

11/2/2026 7:41:34 PM

NO.	DATE	REVISION	APP.

SHEET INTENTIONALLY LEFT BLANK

JQ-IMEG
100 GLASS STREET
SUITE 202
DALLAS, TX 75207
P: 972.392.7340
TBPELS FIRM F-26651

PROJECT NUMBER : 26021466.00

JQ-IMEG RESERVES ITS PROPRIETARY RIGHTS, INCLUDING COPYRIGHTS, TO THIS DRAWING TO THE EXTENT APPLICABLE LAW. SAID DRAWING AND DESIGNS ARE THE EXCLUSIVE PROPERTY OF JQ-IMEG AND SHALL NOT BE USED OR REPRODUCED FOR ANY OTHER PROJECT WITHOUT THE EXPRESS WRITTEN APPROVAL AND PARTICIPATION OF JQ-IMEG. ©2026 JQ-IMEG LLC

MBROH ENGINEERING
11757 KATY FWY,
SUITE 625
HOUSTON, TX 77077
713-468-2545

SURVEYED BY:
FB NO.

INTERIM REVIEW DOCUMENTS
(NOT INTENDED FOR BIDDING, PERMIT OR CONSTRUCTION PURPOSES)

JOHN D. MISCHKOT
TEXAS REGISTRATION No: 107566
DATE: 11/02/2026

CITY OF HOUSTON
HOUSTON PUBLIC WORKS

WHITE OAKS
WWTP IMPROVEMENTS

STRUCTURAL

STEEL SECTIONS AND DETAILS III

WBS NUMBER	FOR CITY OF HOUSTON USE ONLY
R-000265-0158-3	
DRAWING SCALE	
CITY OF HOUSTON, PM	
SHAHIDUR RAHMAN, PE	
SHEET NO. 61 OF 189	

S-25

Autodesk Docs://White Oaks Wastewater Treatment Plant Improvements/20031-20-S_RVT25.rvt

11/2/2026 7:41:35 PM

NO.	DATE	REVISION	APP.

SHEET INTENTIONALLY LEFT BLANK

JQ-IMEG
100 GLASS STREET
SUITE 202
DALLAS, TX 75207
P: 972.392.7340
TBPELS FIRM F-26651

PROJECT NUMBER : 26021466.00

JQ-IMEG RESERVES ITS PROPRIETARY RIGHTS, INCLUDING COPYRIGHTS, TO THIS DRAWING AND ITS ELECTRONIC FILES. SAID DRAWING AND FILES ARE THE EXCLUSIVE PROPERTY OF JQ-IMEG AND SHALL NOT BE USED OR REPRODUCED FOR ANY OTHER PROJECT WITHOUT THE EXPRESS WRITTEN APPROVAL AND PARTICIPATION OF JQ-IMEG. ©2026 JQ-IMEG LLC

MBROH ENGINEERING
11757 KATY FWY,
SUITE 625
HOUSTON, TX 77077
713-468-2545

SURVEYED BY:
FB NO.

INTERIM REVIEW DOCUMENTS
(NOT INTENDED FOR BIDDING, PERMIT OR CONSTRUCTION PURPOSES)
JOHN D. MISCHKOT
TEXAS REGISTRATION No: 107566
DATE: 11/02/2026

CITY OF HOUSTON
HOUSTON PUBLIC WORKS

WHITE OAKS
WWTP IMPROVEMENTS

STRUCTURAL

STEEL SECTIONS AND DETAILS IV

WBS NUMBER	FOR CITY OF HOUSTON USE ONLY
R-000265-0158-3	
DRAWING SCALE	
CITY OF HOUSTON, PM	
SHAHIDUR RAHMAN, PE	
SHEET NO. 62 OF 189	

S-26

Autodesk Docs://White Oaks Wastewater Treatment Plant Improvements/20031-20-S_RVT25.rvt

11/3/2026 5:00:57 PM

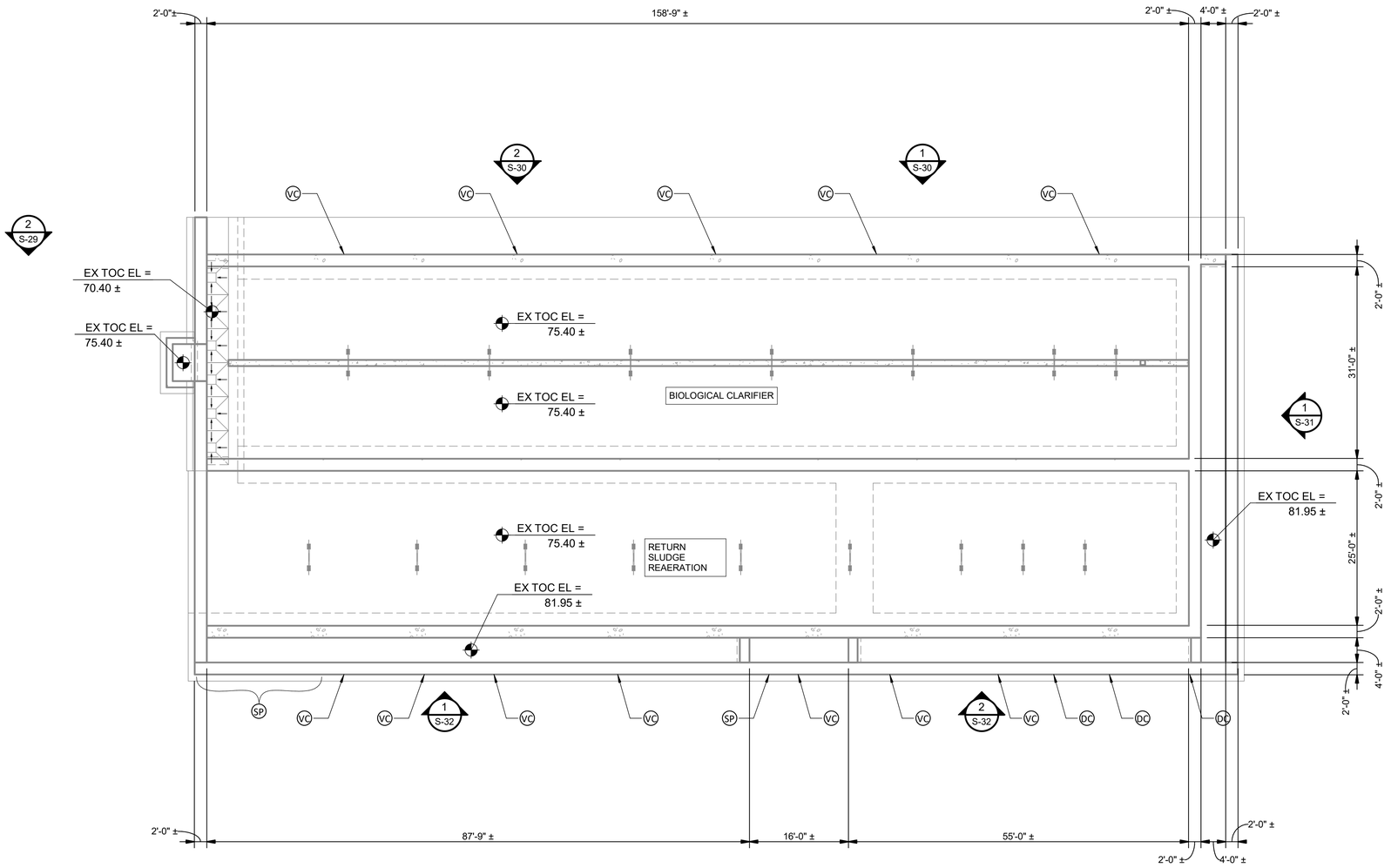

FOUNDATION PLAN

SCALE: 3/32" = 1'-0"

PLAN NOTES:

1. THE EXISTING BASINS WERE IN SERVICE DURING SITE VISITS TO OBSERVE THE STRUCTURAL CONDITION. THE INTERIOR WALL AND SLAB SURFACES HAVE NOT BEEN VISUALLY OBSERVED/REVIEWED. ENGINEER SHALL BE NOTIFIED DURING CONSTRUCTION TO OBSERVE AND IDENTIFY REPAIRS AND REPAIR LOCATIONS TO THE INTERIOR SURFACES ONCE THE BASINS ARE TAKEN OUT OF SERVICE.
2. AT THE WALL CONSTRUCTION JOINTS THAT ARE TO BE REPAIRED FOR VISIBLE/ACTIVE LEAKING, THE EXISTING SUBGRADE SHALL BE EXCAVATED FOR THE FULL WALL HEIGHT TO CLEAN/REPAIR THE JOINT. CONTRACTOR SHALL PROVIDE THE TEMPORARY SHORING/TRENCHING TO RETAIN THE SURROUNDING SOILS.
3. EXISTING STRUCTURE SHOWN IS BASED ON THE FOLLOWING RECORD DOCUMENTS:
   A. WHITE OAK MUD EXPANSION, 1978, FILE NO. 19525
   B. WHITE OAK WWTP IMPROVEMENTS, 2010, FILE NO. 45116R1AS

NOTES BY SYMBOL: " (X) "

- (DC) DIAGONAL CRACK - REPAIR PER "PRESSURE INJECTED URETHANE" NOTE, PER DETAIL 2/S-70
- (HC) HORIZONTAL CRACK - AT CONCRETE WALLS, REPAIR PER "PRESSURE INJECTED URETHANE" NOTES, DWG. NO. CRWS-S-507; AT CONCRETE WALKWAYS, REPAIR PER "SEALANT" NOTES, 2/S-70
- (VC) VERTICAL CRACK - REPAIR PER PRESSURE INJECTED URETHANE" NOTE, PER DETAIL 2/S-70
- (DE) DELAMINATED CONCRETE - REPAIR PER "CONCRETE REPAIR MORTAR" NOTE, PER DETAIL 1/S-70
- (ES) EXPOSED REINFORCING STEEL - REPAIR PER DETAIL 1/S-70
- (SP) SPALLED OR DETERIORATED CONCRETE - REPAIR PER "CONCRETE REPAIR MORTAR" NOTE, PER DETAIL 1/S-70
- (EJ) EXPANSION JOINT REPAIR - REPAIR PER "EXPANSION JOINT SEAL" NOTE, PER DETAIL 4/S-70

NO.	DATE	REVISION	APP.

JQ-IMEG
100 GLASS STREET
SUITE 202
DALLAS, TX 75207
P: 972.392.7340
TBPELS FIRM F-26651

PROJECT NUMBER : 26021466.00

JQ-IMEG RESERVES PROPRIETARY RIGHTS, INCLUDING COPYRIGHTS, TO THIS DRAWING AND THE DATA SHOWN THEREON. SAID DRAWING AND/OR DATA ARE THE EXCLUSIVE PROPERTY OF JQ-IMEG AND SHALL NOT BE USED OR REPRODUCED FOR ANY OTHER PROJECT WITHOUT THE EXPRESS WRITTEN APPROVAL AND PARTICIPATION OF JQ-IMEG. ©2026 JQ-IMEG LLC

MBROH 20
ENGINEERING
11757 KATY FWY,
SUITE 625
HOUSTON, TX 77077
713-468-2545

SURVEYED BY:

FB NO.

INTERIM REVIEW DOCUMENTS

(NOT INTENDED FOR BIDDING, PERMIT OR CONSTRUCTION PURPOSES)

JOHN D. MISCHKOT
TEXAS REGISTRATION No: 107566
DATE: 11/02/2026

CITY OF HOUSTON
HOUSTON PUBLIC WORKS

WHITE OAKS WWTP IMPROVEMENTS

STRUCTURAL

AERATION BASIN FOUNDATION PLAN

WBS NUMBER	FOR CITY OF HOUSTON USE ONLY
R-000265-0158-3	
DRAWING SCALE	
As indicated	
CITY OF HOUSTON, PM	
SHAHIDUR RAHMAN, PE	

S-27 SHEET NO. 63 OF 189

Autodesk Docs://White Oaks Wastewater Treatment Plant Improvements/25004152.01_CoH WHITE OAK_Improvements_Ex AB_R25.rvt

11/3/2026 5:00:58 PM

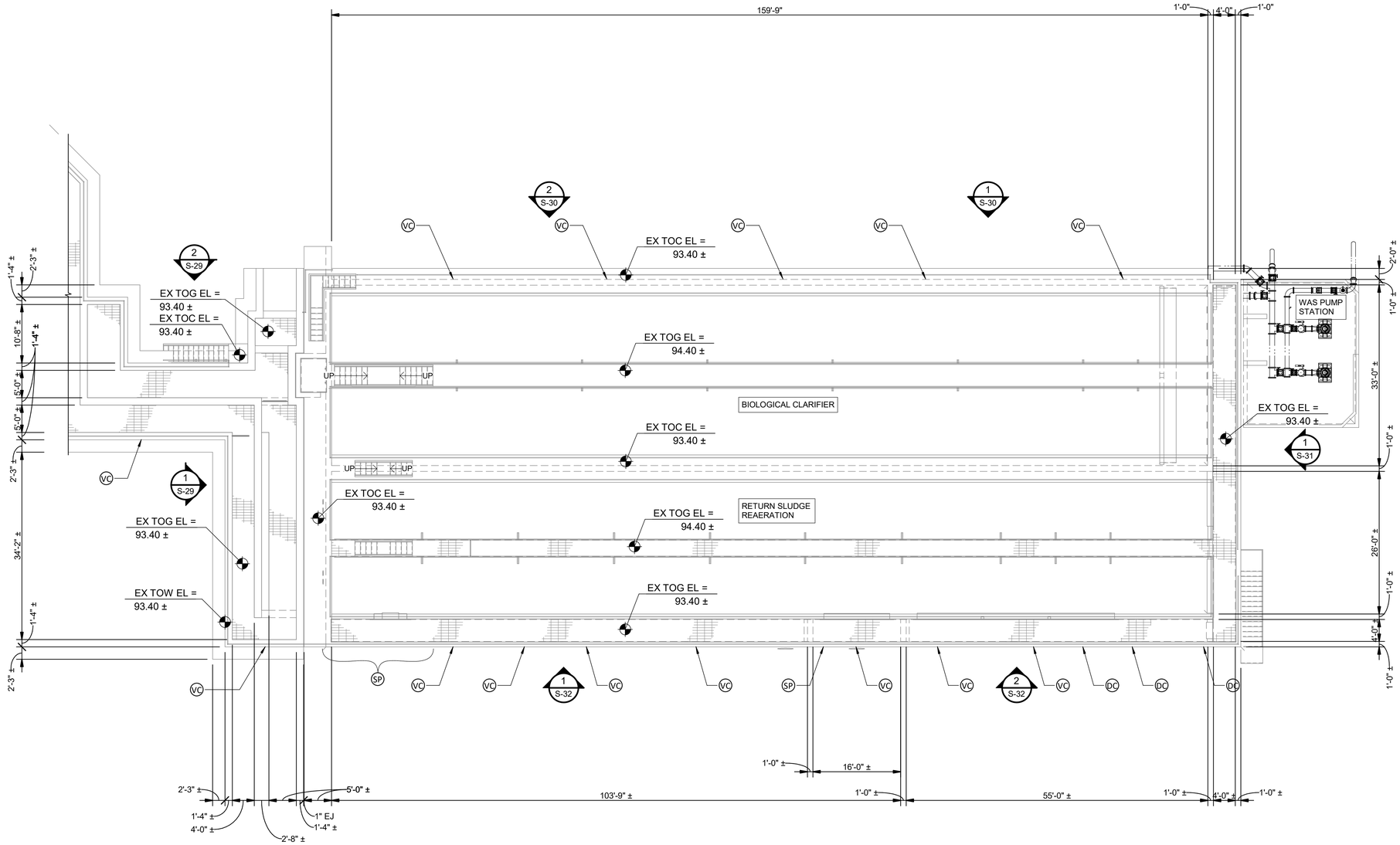

UPPER PLAN

SCALE: 3/32" = 1'-0"

PLAN NOTES:

1. THE EXISTING BASINS WERE IN SERVICE DURING SITE VISITS TO OBSERVE THE STRUCTURAL CONDITION. THE INTERIOR WALL AND SLAB SURFACES HAVE NOT BEEN VISUALLY OBSERVED/REVIEWED. ENGINEER SHALL BE NOTIFIED DURING CONSTRUCTION TO OBSERVE AND IDENTIFY REPAIRS AND REPAIR LOCATIONS TO THE INTERIOR SURFACES ONCE THE BASINS ARE TAKEN OUT OF SERVICE.
2. AT THE WALL CONSTRUCTION JOINTS THAT ARE TO BE REPAIRED FOR VISIBLE/ACTIVE LEAKING, THE EXISTING SUBGRADE SHALL BE EXCAVATED FOR THE FULL WALL HEIGHT TO CLEAN/REPAIR THE JOINT. CONTRACTOR SHALL PROVIDE THE TEMPORARY SHORING/TRENCHING TO RETAIN THE SURROUNDING SOILS.
3. EXISTING STRUCTURE SHOWN IS BASED ON THE FOLLOWING RECORD DOCUMENTS:
   A. WHITE OAK MUD EXPANSION, 1978, FILE NO. 19525
   B. WHITE OAK WWTP IMPROVEMENTS, 2010, FILE NO. 45116R1AS

NOTES BY SYMBOL: " (X) "

- (DC) DIAGONAL CRACK - REPAIR PER "PRESSURE INJECTED URETHANE" NOTE, PER DETAIL 2/S-70
- (HC) HORIZONTAL CRACK - AT CONCRETE WALLS, REPAIR PER "PRESSURE INJECTED URETHANE" NOTES, DWG. NO. CRWS-S-507; AT CONCRETE WALKWAYS, REPAIR PER "SEALANT" NOTES, 2/S-70
- (VC) VERTICAL CRACK - REPAIR PER PRESSURE INJECTED URETHANE" NOTE, PER DETAIL 2/S-70
- (DE) DELAMINATED CONCRETE - REPAIR PER "CONCRETE REPAIR MORTAR" NOTE, PER DETAIL 1/S-70
- (ES) EXPOSED REINFORCING STEEL - REPAIR PER DETAIL 1/S-70
- (SP) SPALLED OR DETERIORATED CONCRETE - REPAIR PER "CONCRETE REPAIR MORTAR" NOTE, PER DETAIL 1/S-70
- (EJ) EXPANSION JOINT REPAIR - REPAIR PER "EXPANSION JOINT SEAL" NOTE, PER DETAIL 4/S-70

NO.	DATE	REVISION	APP.

JQ-IMEG
100 GLASS STREET
SUITE 202
DALLAS, TX 75207
P: 972.392.7340
TBPELS FIRM F-20651
PROJECT NUMBER : 26021466.00
JQ-IMEG RESERVES PROPRIETARY RIGHTS, INCLUDING COPYRIGHTS, TO THIS DOCUMENT AND ANY DATA CONTAINED HEREIN. SUCH DOCUMENT OR DATA ARE THE EXCLUSIVE PROPERTY OF JQ-IMEG AND SHALL NOT BE USED OR REPRODUCED FOR ANY OTHER PROJECT WITHOUT THE EXPRESS WRITTEN APPROVAL AND PARTICIPATION OF JQ-IMEG. ©2026 JQ-IMEG LLC

MBROH 20 ENGINEERING
11757 KATY FWY,
SUITE 625
HOUSTON, TX 77077
713-468-2545

SURVEYED BY:

FB NO.

INTERIM REVIEW DOCUMENTS
NOT INTENDED FOR BIDDING, PERMIT OR CONSTRUCTION PURPOSES)
JOHN D. MISCHKOT
TEXAS REGISTRATION No: 107566
DATE: 11/02/2026

CITY OF HOUSTON
HOUSTON PUBLIC WORKS

WHITE OAKS WWTP IMPROVEMENTS

STRUCTURAL

AERATION BASIN UPPER PLAN

WBS NUMBER	FOR CITY OF HOUSTON USE ONLY
R-000265-0158-3	
DRAWING SCALE	
As indicated	
CITY OF HOUSTON, PM	
SHAHIDUR RAHMAN, PE	
SHEET NO. 64 OF 189	

S-28

Autodesk Docs://White Oaks Wastewater Treatment Plant Improvements/25004152.01_CoH WHITE OAK_Improvements_Ex AB_R25.rvt

11/3/2026 5:00:59 PM

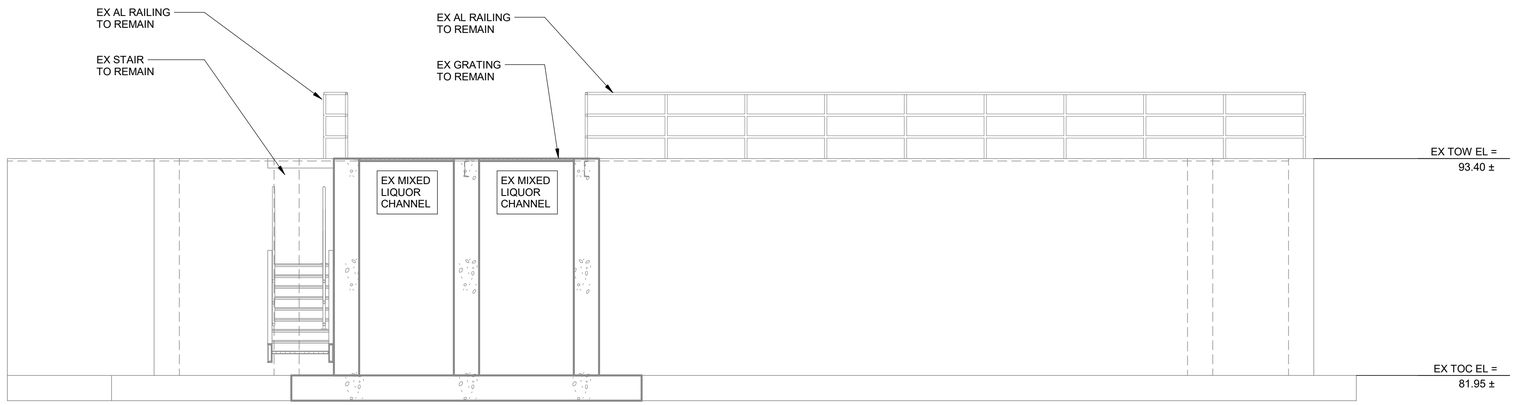

WEST EXTERIOR
ELEVATION

DETAIL 1/S-28

SCALE: 1/4" = 1'-0"

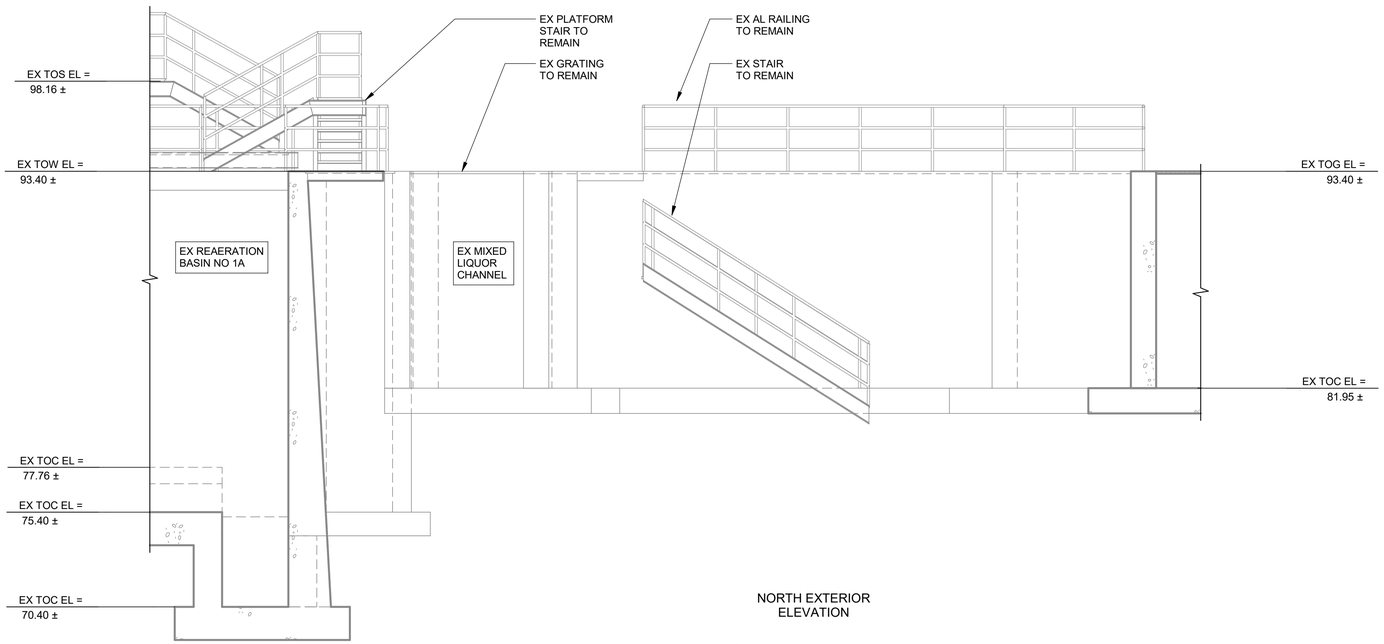

NORTH EXTERIOR
ELEVATION

DETAIL 2/S-27

SCALE: 1/4" = 1'-0"

NO.	DATE	REVISION	APP.

NOTES BY SYMBOL: " (X) "

- (DC) DIAGONAL CRACK - REPAIR PER "PRESSURE INJECTED URETHANE" NOTE, PER DETAIL 2/S-70
- (HC) HORIZONTAL CRACK - AT CONCRETE WALLS, REPAIR PER "PRESSURE INJECTED URETHANE" NOTES, DWG. NO. CRWS-S-507; AT CONCRETE WALKWAYS, REPAIR PER "SEALANT" NOTES, 2/S-70
- (VC) VERTICAL CRACK - REPAIR PER PRESSURE INJECTED URETHANE" NOTE, PER DETAIL 2/S-70
- (DE) DELAMINATED CONCRETE - REPAIR PER "CONCRETE REPAIR MORTAR" NOTE, PER DETAIL 1/S-70
- (ES) EXPOSED REINFORCING STEEL - REPAIR PER DETAIL 1/S-70
- (SP) SPALLED OR DETERIORATED CONCRETE - REPAIR PER "CONCRETE REPAIR MORTAR" NOTE, PER DETAIL 1/S-70
- (EJ) EXPANSION JOINT REPAIR - REPAIR PER "EXPANSION JOINT SEAL" NOTE, PER DETAIL 4/S-70

JQ-IMEG
100 GLASS STREET
SUITE 202
DALLAS, TX 75207
P: 972.392.7340
TBPELS FIRM F-26651
PROJECT NUMBER : 26021466.00
JQ-IMEG RESERVES PROPRIETARY RIGHTS, INCLUDING COPYRIGHTS, TO THIS DRAWING AND THE DATA SHOWN THEREON. SAID DRAWING AND/OR DATA ARE THE EXCLUSIVE PROPERTY OF JQ-IMEG AND SHALL NOT BE USED OR REPRODUCED FOR ANY OTHER PROJECT WITHOUT THE EXPRESS WRITTEN APPROVAL AND PARTICIPATION OF JQ-IMEG. ©2026 JQ-IMEG LLC

MBROH ENGINEERING 20
11757 KATY FWY,
SUITE 625
HOUSTON, TX 77077
713-468-2545

INTERIM REVIEW DOCUMENTS
(NOT INTENDED FOR BIDDING, PERMIT OR CONSTRUCTION PURPOSES)
JOHN D. MISCHKOT
TEXAS REGISTRATION No: 107566
DATE: 11/02/2026

SURVEYED BY:
FB NO.

CITY OF HOUSTON
HOUSTON PUBLIC WORKS

WHITE OAKS
WWTP IMPROVEMENTS

STRUCTURAL

AERATION BASIN ELEVATIONS I

WBS NUMBER	FOR CITY OF HOUSTON USE ONLY
R-000265-0158-3	
DRAWING SCALE	
As indicated	
CITY OF HOUSTON, PM	
SHAHIDUR RAHMAN, PE	

S-29

SHEET NO. 65 OF 189

Autodesk Docs://White Oaks Wastewater Treatment Plant Improvements/25004152.01_CoH WHITE OAK_Improvements_Ex AB_R25.rvt

11/3/2026 5:01:00 PM

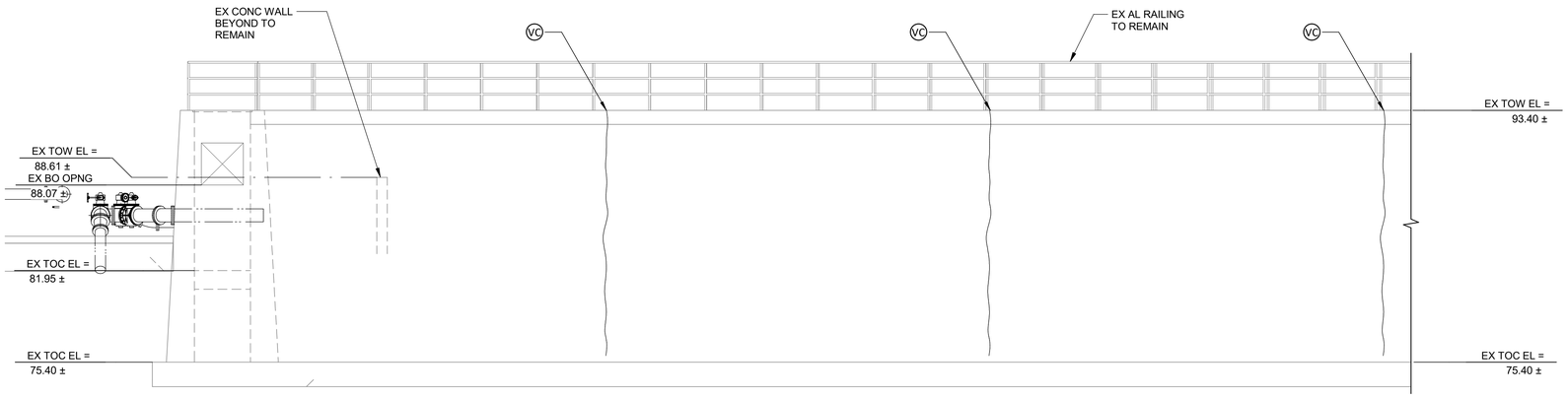

NORTH EXTERIOR
ELEVATION

DETAIL 1/S-27

SCALE: 3/16" = 1'-0"

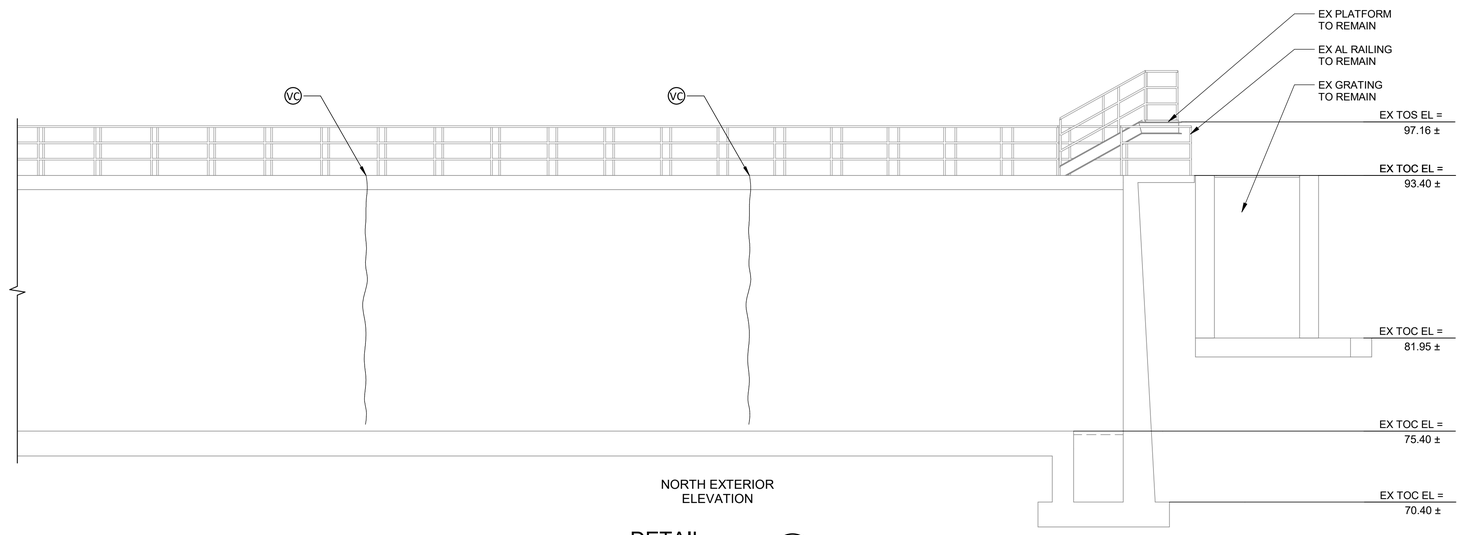

NORTH EXTERIOR
ELEVATION

DETAIL 2/S-27

SCALE: 3/16" = 1'-0"

NO.	DATE	REVISION	APP.

NOTES BY SYMBOL: " (X) "

- (DC) DIAGONAL CRACK - REPAIR PER "PRESSURE INJECTED URETHANE" NOTE, PER DETAIL 2/S-70
- (HC) HORIZONTAL CRACK - AT CONCRETE WALLS, REPAIR PER "PRESSURE INJECTED URETHANE" NOTES, DWG. NO. CRWS-S-507; AT CONCRETE WALKWAYS, REPAIR PER "SEALANT" NOTES, 2/S-70
- (VC) VERTICAL CRACK - REPAIR PER PRESSURE INJECTED URETHANE" NOTE, PER DETAIL 2/S-70
- (DE) DELAMINATED CONCRETE - REPAIR PER "CONCRETE REPAIR MORTAR" NOTE, PER DETAIL 1/S-70
- (ES) EXPOSED REINFORCING STEEL - REPAIR PER DETAIL 1/S-70
- (SP) SPALLED OR DETERIORATED CONCRETE - REPAIR PER "CONCRETE REPAIR MORTAR" NOTE, PER DETAIL 1/S-70
- (EJ) EXPANSION JOINT REPAIR - REPAIR PER "EXPANSION JOINT SEAL" NOTE, PER DETAIL 4/S-70

JQ-IMEG
100 GLASS STREET
SUITE 202
DALLAS, TX 75207
P: 972.392.7340
TBPELS FIRM F-26651
PROJECT NUMBER: 26021466.00
JQ-IMEG RESERVES PROPRIETARY RIGHTS, INCLUDING COPYRIGHTS, TO THIS DRAWING AND THE DATA SHOWN THEREON. SAID DRAWING AND/OR DATA ARE THE EXCLUSIVE PROPERTY OF JQ-IMEG AND SHALL NOT BE USED OR REPRODUCED FOR ANY OTHER PROJECT WITHOUT THE EXPRESS WRITTEN APPROVAL AND PARTICIPATION OF JQ-IMEG. ©2026 JQ-IMEG LLC

MBROH 20 ENGINEERING
11757 KATY FWY,
SUITE 625
HOUSTON, TX 77077
713-468-2545

INTERIM REVIEW DOCUMENTS
(NOT INTENDED FOR BIDDING, PERMIT OR CONSTRUCTION PURPOSES)
JOHN D. MBOH
TEXAS REGISTRATION No: 107566
DATE: 11/02/2026

SURVEYED BY:

FB NO.

CITY OF HOUSTON
HOUSTON PUBLIC WORKS

WHITE OAKS WWTP IMPROVEMENTS

STRUCTURAL

AERATION BASIN ELEVATIONS II

WBS NUMBER	FOR CITY OF HOUSTON USE ONLY
R-000265-0158-3	
DRAWING SCALE	
As indicated	
CITY OF HOUSTON, PM	
SHAHIDUR RAHMAN, PE	

S-30 SHEET NO. 66 OF 189

Autodesk Docs://White Oaks Wastewater Treatment Plant Improvements/25004152.01_CoH WHITE OAK_improvements_Ex AB_R25.rvt

11/3/2026 5:01:01 PM

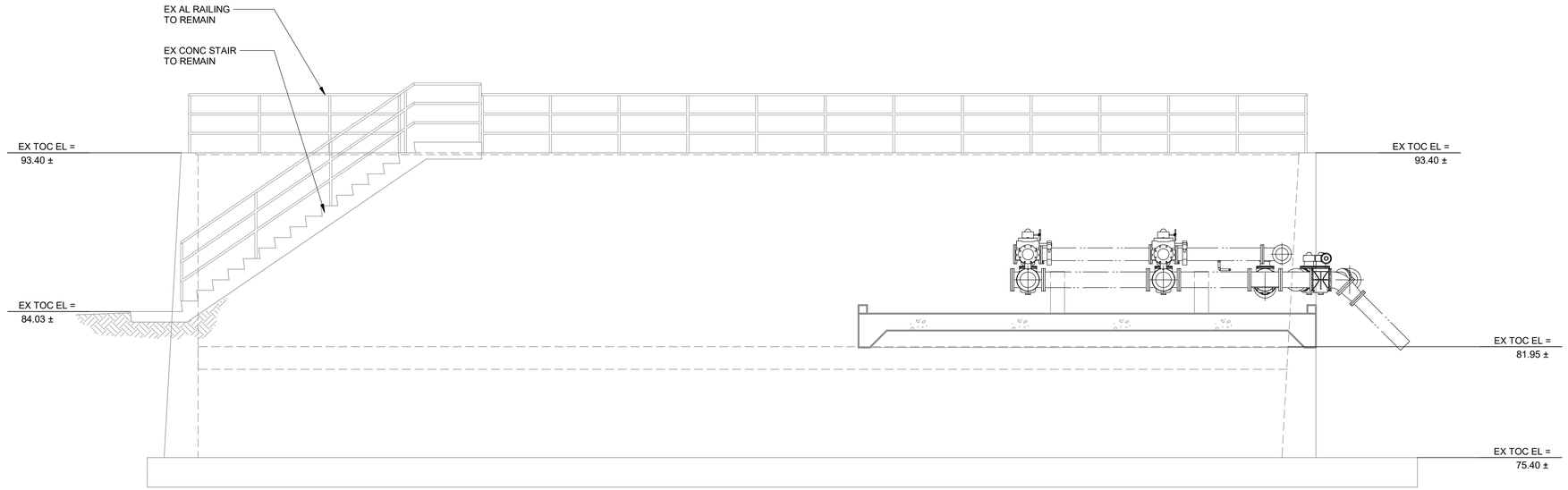

EAST EXTERIOR
ELEVATION

DETAIL 1/S-27
SCALE: 1/4" = 1'-0"

NO.	DATE	REVISION	APP.

NOTES BY SYMBOL: " (X) "

(DC) DIAGONAL CRACK - REPAIR PER "PRESSURE INJECTED URETHANE" NOTE, PER DETAIL 2/S-70

(HC) HORIZONTAL CRACK - AT CONCRETE WALLS, REPAIR PER "PRESSURE INJECTED URETHANE" NOTES, DWG. NO. CRWS-S-507; AT CONCRETE WALKWAYS, REPAIR PER "SEALANT" NOTES, 2/S-70

(VC) VERTICAL CRACK - REPAIR PER PRESSURE INJECTED URETHANE" NOTE, PER DETAIL 2/S-70

(DE) DELAMINATED CONCRETE - REPAIR PER "CONCRETE REPAIR MORTAR" NOTE, PER DETAIL 1/S-70

(ES) EXPOSED REINFORCING STEEL - REPAIR PER DETAIL 1/S-70

(SP) SPALLED OR DETERIORATED CONCRETE - REPAIR PER "CONCRETE REPAIR MORTAR" NOTE, PER DETAIL 1/S-70

(EJ) EXPANSION JOINT REPAIR - REPAIR PER "EXPANSION JOINT SEAL" NOTE, PER DETAIL 4/S-70

JQ-IMEG
100 GLASS STREET
SUITE 202
DALLAS, TX 75207
P: 972.392.7340
TBPELS FIRM F-26651

PROJECT NUMBER : 26021466.00

JQ-IMEG RESERVES PROPRIETARY RIGHTS, INCLUDING COPYRIGHTS, TO THIS DRAWING AND THE DATA SHOWN THEREON. SAID DRAWING AND/OR DATA ARE THE EXCLUSIVE PROPERTY OF JQ-IMEG AND SHALL NOT BE USED OR REPRODUCED FOR ANY OTHER PROJECT WITHOUT THE EXPRESS WRITTEN APPROVAL AND PARTICIPATION OF JQ-IMEG. ©2026 JQ-IMEG LLC

MBROH 20 ENGINEERING
11757 KATY FWY,
SUITE 625
HOUSTON, TX 77077
713-468-2545

SURVEYED BY:
FB NO.

INTERIM REVIEW DOCUMENTS
(NOT INTENDED FOR BIDDING, PERMIT OR CONSTRUCTION PURPOSES)
JOHN D. MROHKOT
TEXAS REGISTRATION No: 107566
DATE: 11/02/2026

CITY OF HOUSTON
HOUSTON PUBLIC WORKS

WHITE OAKS
WWTP IMPROVEMENTS

STRUCTURAL

AERATION BASIN ELEVATIONS III

WBS NUMBER	FOR CITY OF HOUSTON USE ONLY
R-000265-0158-3	
DRAWING SCALE	
As indicated	
CITY OF HOUSTON, PM	
SHAHIDUR RAHMAN, PE	
SHEET NO. 67 OF 189	

S-31

Autodesk Docs://White Oaks Wastewater Treatment Plant Improvements/25004152.01_Colt WHITE OAK_Improvements_Ex AB_R25.rvt

11/3/2026 5:01:01 PM

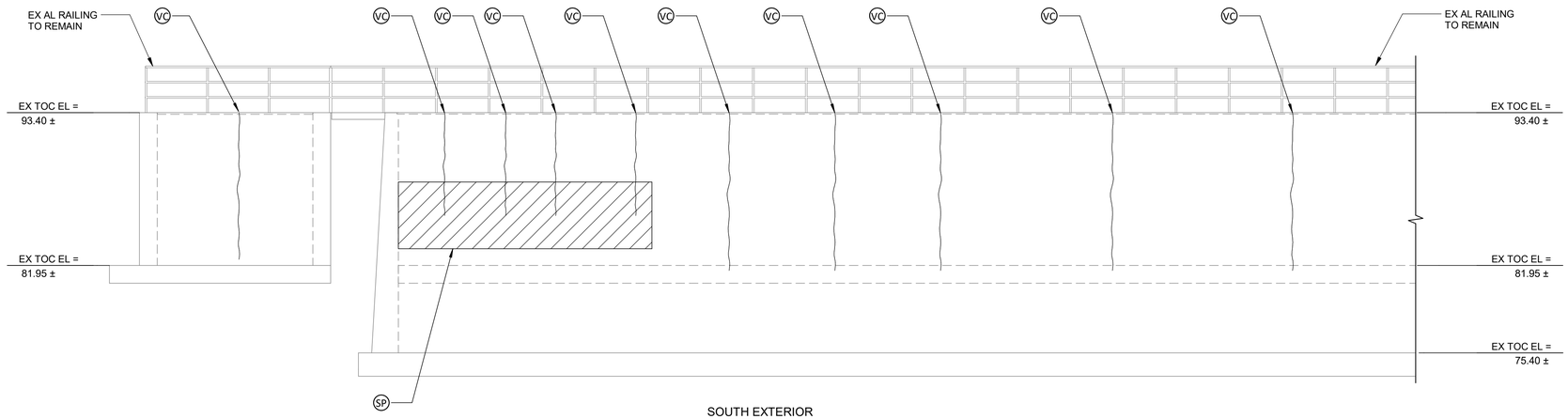

SOUTH EXTERIOR
ELEVATION

DETAIL 1/S-27

SCALE: 3/16" = 1'-0"

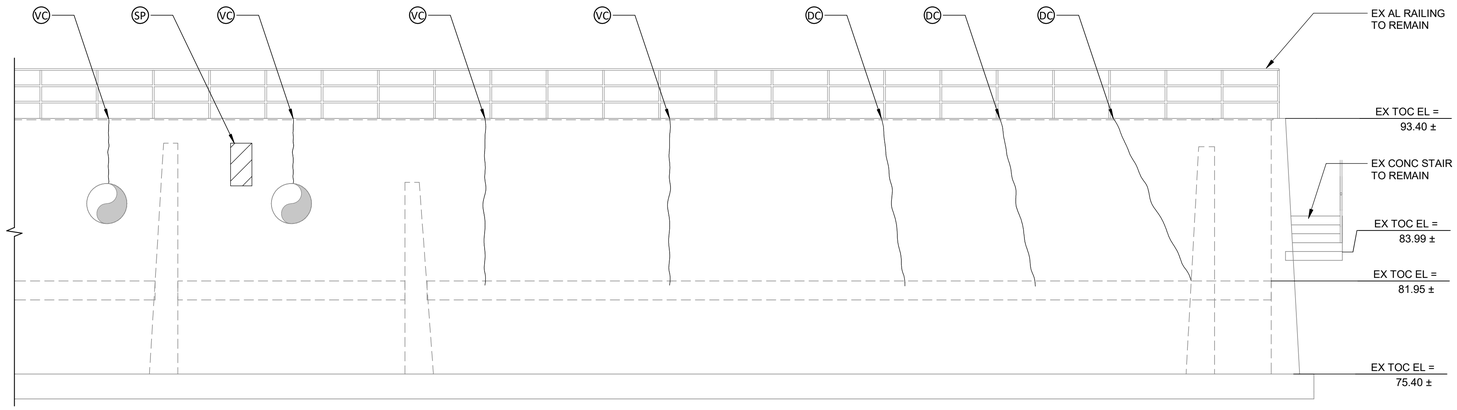

SOUTH EXTERIOR
ELEVATION

DETAIL 2/S-27

SCALE: 3/16" = 1'-0"

NO.	DATE	REVISION	APP.

NOTES BY SYMBOL: " (X) "

- (DC) DIAGONAL CRACK - REPAIR PER "PRESSURE INJECTED URETHANE" NOTE, PER DETAIL 2/S-70
- (HC) HORIZONTAL CRACK - AT CONCRETE WALLS, REPAIR PER "PRESSURE INJECTED URETHANE" NOTES, DWG. NO. CRWS-S-507; AT CONCRETE WALKWAYS, REPAIR PER "SEALANT" NOTES, 2/S-70
- (VC) VERTICAL CRACK - REPAIR PER PRESSURE INJECTED URETHANE" NOTE, PER DETAIL 2/S-70
- (DE) DELAMINATED CONCRETE - REPAIR PER "CONCRETE REPAIR MORTAR" NOTE, PER DETAIL 1/S-70
- (ES) EXPOSED REINFORCING STEEL - REPAIR PER DETAIL 1/S-70
- (SP) SPALLED OR DETERIORATED CONCRETE - REPAIR PER "CONCRETE REPAIR MORTAR" NOTE, PER DETAIL 1/S-70
- (EJ) EXPANSION JOINT REPAIR - REPAIR PER "EXPANSION JOINT SEAL" NOTE, PER DETAIL 4/S-70

JQ-IMEG
100 GLASS STREET
SUITE 202
DALLAS, TX 75207
P: 972.392.7340
TBPELS FIRM F-26651
PROJECT NUMBER: 26021466.00
JQ-IMEG RESERVES PROPRIETARY RIGHTS, INCLUDING COPYRIGHTS, TO THIS DRAWING AND THE DATA SHOWN THEREON. SAID DRAWING AND/OR DATA ARE THE EXCLUSIVE PROPERTY OF JQ-IMEG AND SHALL NOT BE USED OR REPRODUCED FOR ANY OTHER PROJECT WITHOUT THE EXPRESS WRITTEN APPROVAL AND PARTICIPATION OF JQ-IMEG. ©2026 JQ-IMEG LLC

MBROH 20 ENGINEERING
11757 KATY FWY,
SUITE 625
HOUSTON, TX 77077
713-468-2545

INTERIM REVIEW DOCUMENTS
NOT INTENDED FOR BIDDING, PERMIT OR CONSTRUCTION PURPOSES
JOHN D. MBOH
TEXAS REGISTRATION No: 107566
DATE: 11/02/2026

SURVEYED BY:
FB NO.

CITY OF HOUSTON
HOUSTON PUBLIC WORKS

WHITE OAKS WWTP IMPROVEMENTS

STRUCTURAL

AERATION BASIN ELEVATIONS IV

WBS NUMBER	FOR CITY OF HOUSTON USE ONLY
R-000265-0158-3	
DRAWING SCALE	
As indicated	
CITY OF HOUSTON, PM	
SHAHIDUR RAHMAN, PE	
SHEET NO. 68 OF 189	

S-32

Autodesk Docs://White Oaks Wastewater Treatment Plant Improvements/25004152.01_CoH WHITE OAK_improvements_Ex AB_R25.rvt

11/3/2026 5:01:02 PM

SHEET INTENTIONALLY LEFT BLANK

NO.	DATE	REVISION	APP.

JQ-IMEG
100 GLASS STREET
SUITE 202
DALLAS, TX 75207
P: 972.392.7340
TBPELS FIRM F-26651

PROJECT NUMBER : 26021466.00

JQ-IMEG RESERVES PROPRIETARY RIGHTS, INCLUDING COPYRIGHTS, TO THIS DRAWING IN WHOLE OR IN PART. SAID DRAWING AND DESIGNS ARE THE EXCLUSIVE PROPERTY OF JQ-IMEG AND SHALL NOT BE USED OR REPRODUCED FOR ANY OTHER PROJECT WITHOUT THE EXPRESS WRITTEN APPROVAL AND PARTICIPATION OF JQ-IMEG. ©2026 JQ-IMEG LLC

MBROH ENGINEERING
11757 KATY FWY,
SUITE 625
HOUSTON, TX 77077
713-468-2545

SURVEYED BY:

FB NO.

INTERIM REVIEW DOCUMENTS

(NOT INTENDED FOR BIDDING, PERMIT OR CONSTRUCTION PURPOSES)

JOHN D. MISCHKOT
TEXAS REGISTRATION No: 107566
DATE: 11/03/2026

CITY OF HOUSTON
HOUSTON PUBLIC WORKS

WHITE OAKS
WWTP IMPROVEMENTS

STRUCTURAL
AERATION BASIN SECTIONS AND DETAILS

WBS NUMBER	FOR CITY OF HOUSTON USE ONLY
R-000265-0158-3	
DRAWING SCALE	
CITY OF HOUSTON, PM	
SHAHIDUR RAHMAN, PE	
SHEET NO. 69 OF 189	

S-33

Autodesk Docs://White Oaks Wastewater Treatment Plant Improvements/25004152.01_CoH WHITE OAK_Improvements_Ex AB_R25.rvt

11/3/2026 4:23:30 PM

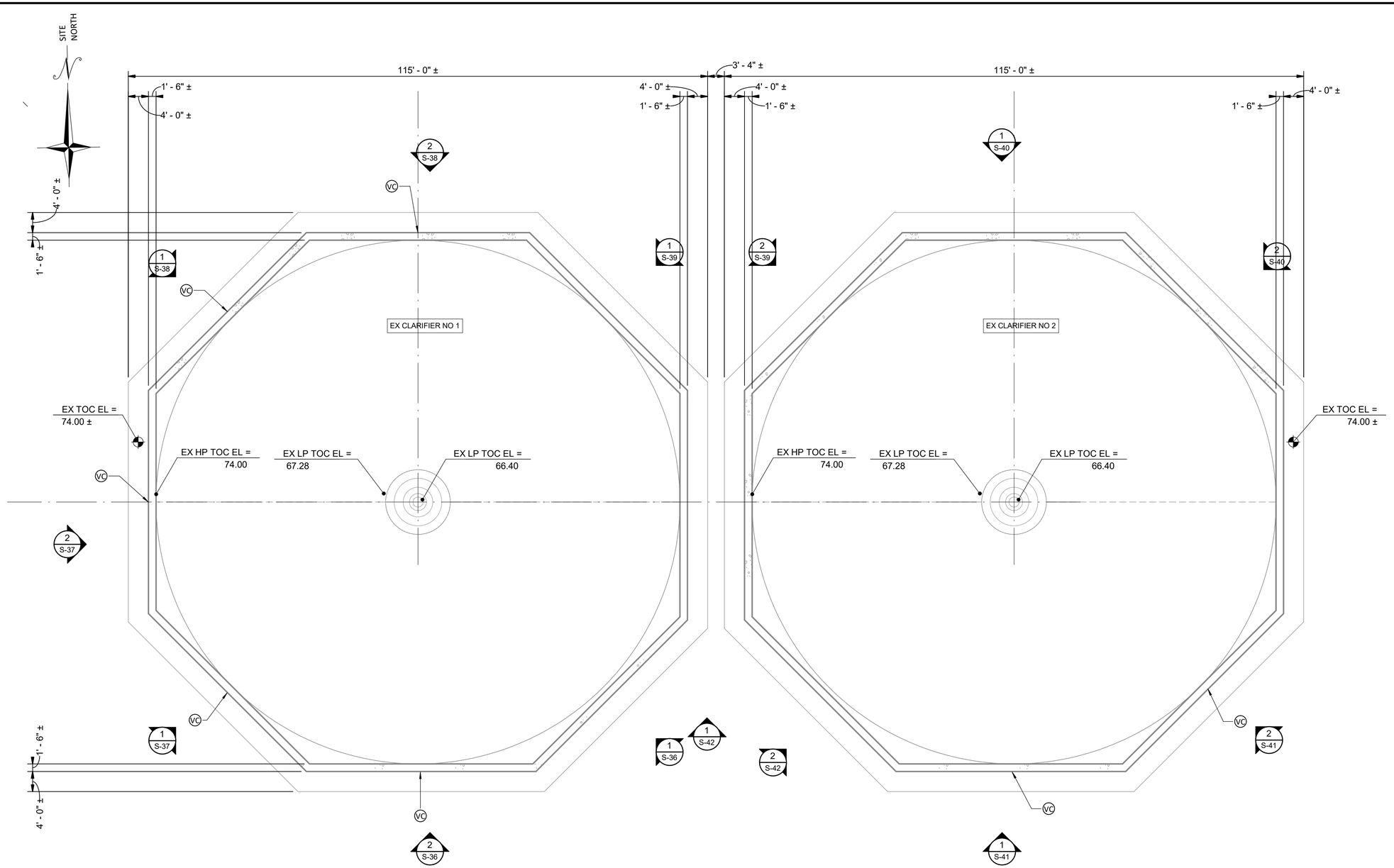

FOUNDATION PLAN AT EL 78.05'

PLAN

3/32" = 1'-0"

PLAN NOTES:

1. THE EXISTING BASINS WERE IN SERVICE DURING SITE VISITS TO OBSERVE THE STRUCTURAL CONDITION. THE INTERIOR WALL AND SLAB SURFACES HAVE NOT BEEN VISUALLY OBSERVED/REVIEWED. ENGINEER SHALL BE NOTIFIED DURING CONSTRUCTION TO OBSERVE AND IDENTIFY REPAIRS AND REPAIR LOCATIONS TO THE INTERIOR SURFACES ONCE THE BASINS ARE TAKEN OUT OF SERVICE.
2. AT THE WALL CONSTRUCTION JOINTS THAT ARE TO BE REPAIRED FOR VISIBLE/ACTIVE LEAKING, THE EXISTING SUBGRADE SHALL BE EXCAVATED FOR THE FULL WALL HEIGHT TO CLEAN/REPAIR THE JOINT. CONTRACTOR SHALL PROVIDE THE TEMPORARY SHORING/TRENCHING TO RETAIN THE SURROUNDING SOILS.
3. EXISTING STRUCTURE SHOWN IS BASED ON THE FOLLOWING RECORD DOCUMENTS:
   A. EXPANSION OF WHITE OAK WWTP, 1984, FILE NO. 27744

NOTES BY SYMBOL: "(X)"

- (DC) DIAGONAL CRACK - REPAIR PER "PRESSURE INJECTED URETHANE" NOTE, PER DETAIL 2/ S-70
- (HC) HORIZONTAL CRACK - AT CONCRETE WALLS, REPAIR PER "PRESSURE INJECTED URETHANE" NOTES, DWG. NO. CRWS-S-507; AT CONCRETE WALKWAYS, REPAIR PER "SEALANT" NOTES, 2/ S-70
- (VC) VERTICAL CRACK - REPAIR PER PRESSURE INJECTED URETHANE" NOTE, PER DETAIL 2/ S-70
- (DE) DELAMINATED CONCRETE - REPAIR PER "CONCRETE REPAIR MORTAR" NOTE, PER DETAIL 1/ S-70
- (ES) EXPOSED REINFORCING STEEL - REPAIR PER DETAIL 1/ S-70
- (SP) SPALLED OR DETERIORATED CONCRETE - REPAIR PER "CONCRETE REPAIR MORTAR" NOTE, PER DETAIL 1/ S-70
- (EJ) EXPANSION JOINT REPAIR - REPAIR PER "EXPANSION JOINT SEAL" NOTE, PER DETAIL 4/ S-70

NO.	DATE	REVISION	APP.

JQ-IMEG
100 GLASS STREET
SUITE 202
DALLAS, TX 75207
P: 972.392.7340
TBPELS FIRM F-26651
PROJECT NUMBER : 26021466.00
JQ-IMEG RESERVES PROPRIETARY RIGHTS, INCLUDING COPYRIGHTS, TO THIS DRAWING AND THE DATA SHOWN THEREON. SAID DRAWING AND/OR DATA ARE THE EXCLUSIVE PROPERTY OF JQ-IMEG AND SHALL NOT BE USED OR REPRODUCED FOR ANY OTHER PROJECT WITHOUT THE EXPRESS WRITTEN APPROVAL AND PARTICIPATION OF JQ-IMEG. ©2026 JQ-IMEG LLC

MBROH ENGINEERING 20
11757 KATY FWY,
SUITE 625
HOUSTON, TX 77077
713-468-2545

SURVEYED BY:

FB NO.

INTERIM REVIEW DOCUMENTS

(NOT INTENDED FOR BIDDING, PERMIT OR CONSTRUCTION PURPOSES)

JOHN D. MISCHKOT
TEXAS REGISTRATION No: 107566
DATE: 11/02/2026

CITY OF HOUSTON
HOUSTON PUBLIC WORKS

WHITE OAKS WWTP IMPROVEMENTS

STRUCTURAL

CLARIFIERS FOUNDATION PLAN

WBS NUMBER	FOR CITY OF HOUSTON USE ONLY
R-000265-0158-3	
DRAWING SCALE	
As indicated	
CITY OF HOUSTON, PM	
SHAHIDUR RAHMAN, PE	
SHEET NO. 70 OF 189	

S-34

Autodesk Docs://White Oaks Wastewater Treatment Plant Improvements/25004152.01_CoH WHITE OAK_Clarifiers_R25.rvt

11/3/2026 4:23:30 PM

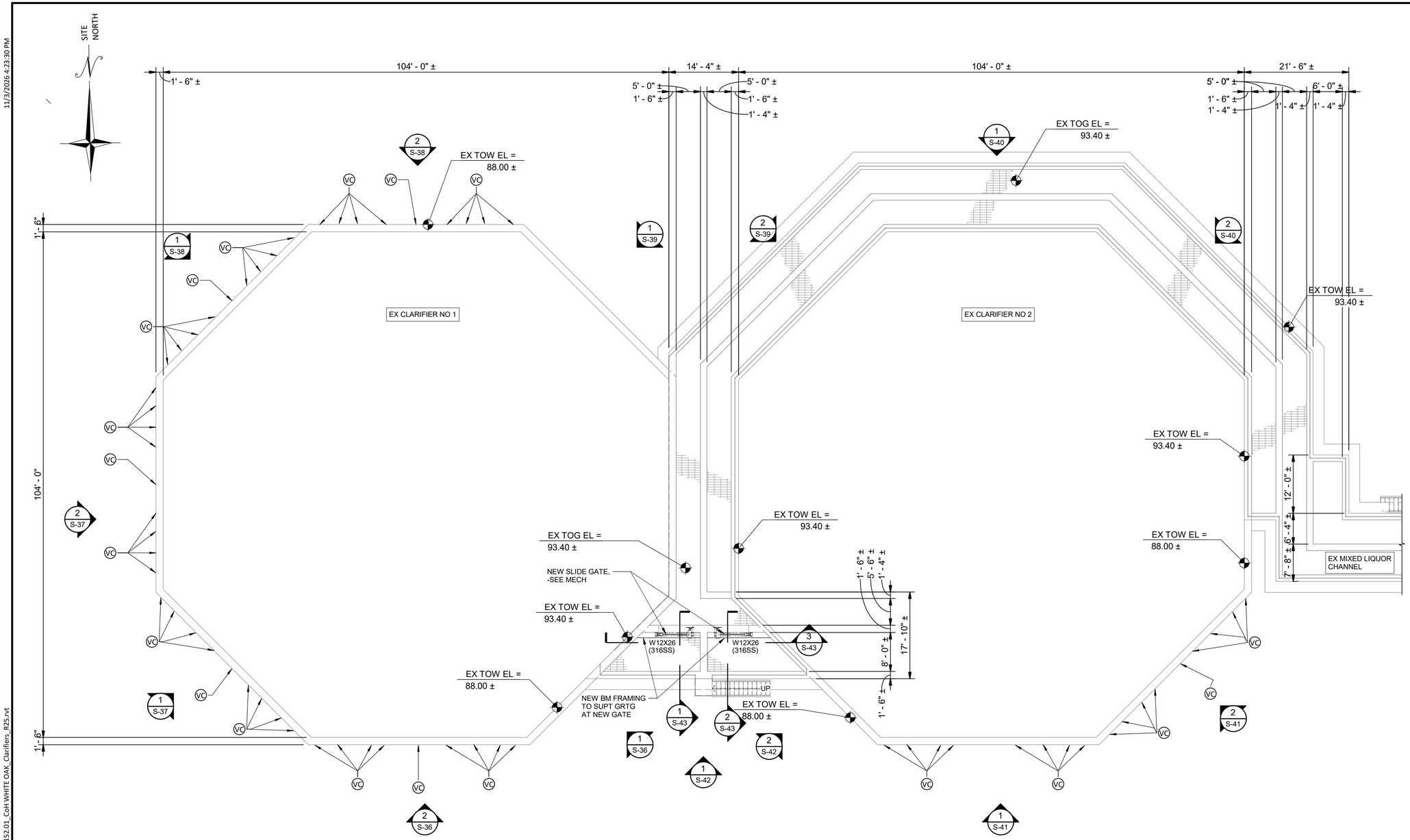

UPPER PLAN AT EL 93.40'

PLAN

3/32" = 1'-0"

PLAN NOTES:

1. THE EXISTING BASINS WERE IN SERVICE DURING SITE VISITS TO OBSERVE THE STRUCTURAL CONDITION. THE INTERIOR WALL AND SLAB SURFACES HAVE NOT BEEN VISUALLY OBSERVED/REVIEWED. ENGINEER SHALL BE NOTIFIED DURING CONSTRUCTION TO OBSERVE AND IDENTIFY REPAIRS AND REPAIR LOCATIONS TO THE INTERIOR SURFACES ONCE THE BASINS ARE TAKEN OUT OF SERVICE.
2. AT THE WALL CONSTRUCTION JOINTS THAT ARE TO BE REPAIRED FOR VISIBLE/ACTIVE LEAKING, THE EXISTING SUBGRADE SHALL BE EXCAVATED FOR THE FULL WALL HEIGHT TO CLEAN/REPAIR THE JOINT. CONTRACTOR SHALL PROVIDE THE TEMPORARY SHORING/TRENCHING TO RETAIN THE SURROUNDING SOILS.
3. EXISTING STRUCTURE SHOWN IS BASED ON THE FOLLOWING RECORD DOCUMENTS:
   A. EXPANSION OF WHITE OAK WWTP, 1984, FILE NO. 27744

NOTES BY SYMBOL: "(X)"

- (DC) DIAGONAL CRACK - REPAIR PER "PRESSURE INJECTED URETHANE" NOTE, PER DETAIL 2/ S-70
- (HC) HORIZONTAL CRACK - AT CONCRETE WALLS, REPAIR PER "PRESSURE INJECTED URETHANE" NOTES, DWG. NO. CRWS-S-507; AT CONCRETE WALKWAYS, REPAIR PER "SEALANT" NOTES, 2/ S-70
- (VC) VERTICAL CRACK - REPAIR PER PRESSURE INJECTED URETHANE" NOTE, PER DETAIL 2/ S-70
- (DE) DELAMINATED CONCRETE - REPAIR PER "CONCRETE REPAIR MORTAR" NOTE, PER DETAIL 1/ S-70
- (ES) EXPOSED REINFORCING STEEL - REPAIR PER DETAIL 1/ S-70
- (SP) SPALLED OR DETERIORATED CONCRETE - REPAIR PER "CONCRETE REPAIR MORTAR" NOTE, PER DETAIL 1/ S-70
- (EJ) EXPANSION JOINT REPAIR - REPAIR PER "EXPANSION JOINT SEAL" NOTE, PER DETAIL 4/ S-70

NO.	DATE	REVISION	APP.

JQ-IMEG
100 GLASS STREET
SUITE 202
DALLAS, TX 75207
P: 972.392.7340
TBPELS FIRM F-26651
PROJECT NUMBER : 26021466.00
JQ-IMEG RESERVES PROPRIETARY RIGHTS, INCLUDING COPYRIGHTS, TO THIS DRAWING AND THE DATA SHOWN THEREON. SAID DRAWING AND/OR DATA ARE THE EXCLUSIVE PROPERTY OF JQ-IMEG AND SHALL NOT BE USED OR REPRODUCED FOR ANY OTHER PROJECT WITHOUT THE EXPRESS WRITTEN APPROVAL AND PARTICIPATION OF JQ-IMEG. ©2026 JQ-IMEG LLC

MBROH ENGINEERING
11757 KATY FWY,
SUITE 625
HOUSTON, TX 77077
713-468-2545

INTERIM REVIEW DOCUMENTS
(NOT INTENDED FOR BIDDING, PERMIT OR CONSTRUCTION PURPOSES)
JOHN D. MISCHKOT
TEXAS REGISTRATION No: 107566
DATE: 11/02/2026

SURVEYED BY:
FB NO.

CITY OF HOUSTON
HOUSTON PUBLIC WORKS

WHITE OAKS WWTP IMPROVEMENTS

STRUCTURAL

CLARIFIERS UPPER PLAN

WBS NUMBER	FOR CITY OF HOUSTON USE ONLY
R-000265-0158-3	
DRAWING SCALE	
As indicated	
CITY OF HOUSTON, PM	
SHAHIDUR RAHMAN, PE	
S-35	SHEET NO. 71 OF 189

Autodesk Docs://White Oaks Wastewater Treatment Plant Improvements/25004152.01_CoH WHITE OAK_Clarifiers_R25.rvt

11/3/2026 4:23:31 PM

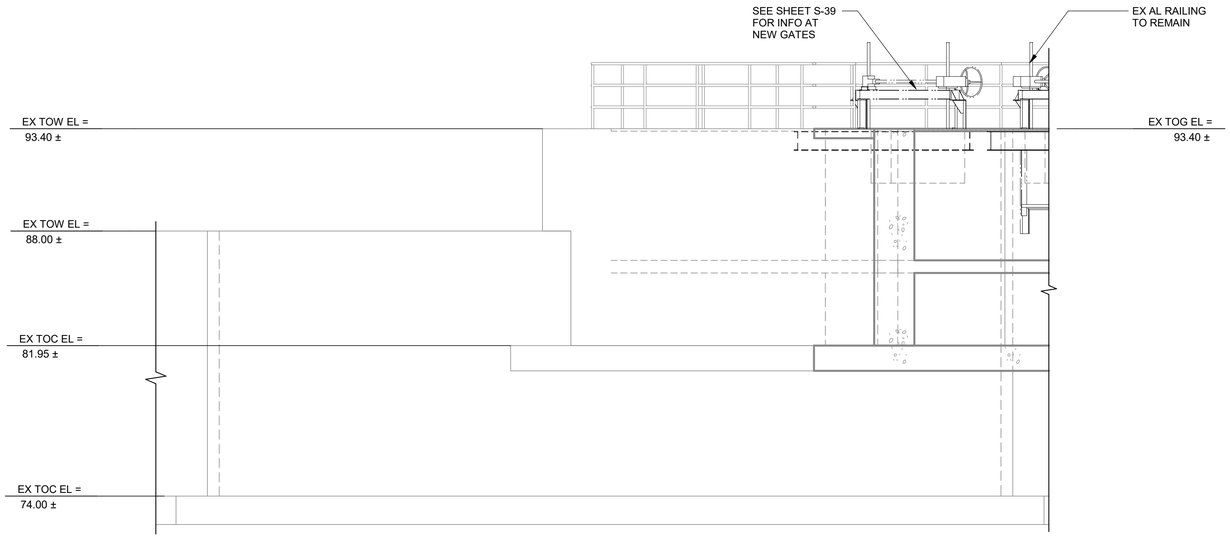

SOUTHEAST EXTERIOR
ELEVATION

DETAIL 1 / S-34

SCALE: 1/4" = 1'-0"

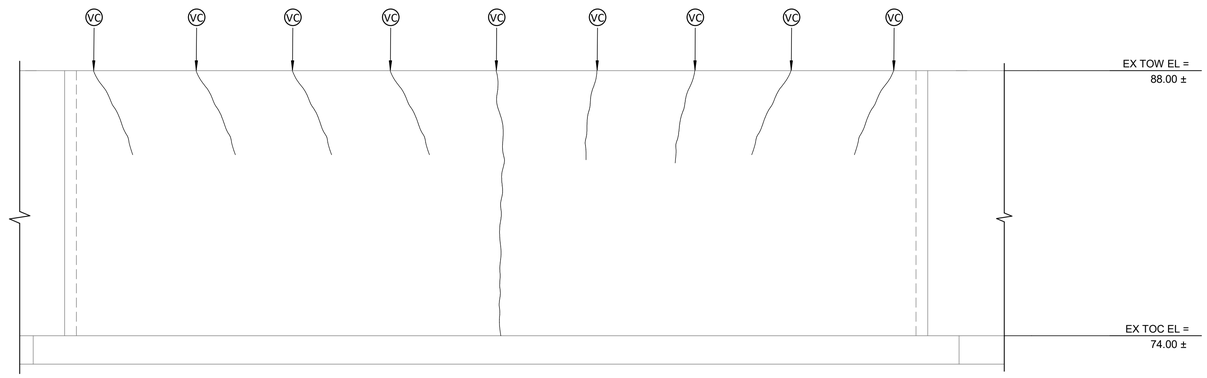

SOUTH EXTERIOR
ELEVATION

DETAIL 2 / S-34

SCALE: 1/4" = 1'-0"

NO.	DATE	REVISION	APP.

NOTES BY SYMBOL: "(X)"

- (DC) DIAGONAL CRACK - REPAIR PER "PRESSURE INJECTED URETHANE" NOTE, PER DETAIL 2/ S-70
- (HC) HORIZONTAL CRACK - AT CONCRETE WALLS, REPAIR PER "PRESSURE INJECTED URETHANE" NOTES, DWG. NO. CRWS-S-507; AT CONCRETE WALKWAYS, REPAIR PER "SEALANT" NOTES, 2/ S-70
- (VC) VERTICAL CRACK - REPAIR PER PRESSURE INJECTED URETHANE" NOTE, PER DETAIL 2/ S-70
- (DE) DELAMINATED CONCRETE - REPAIR PER "CONCRETE REPAIR MORTAR" NOTE, PER DETAIL 1/ S-70
- (ES) EXPOSED REINFORCING STEEL - REPAIR PER DETAIL 1/ S-70
- (SP) SPALLED OR DETERIORATED CONCRETE - REPAIR PER "CONCRETE REPAIR MORTAR" NOTE, PER DETAIL 1/ S-70
- (EJ) EXPANSION JOINT REPAIR - REPAIR PER "EXPANSION JOINT SEAL" NOTE, PER DETAIL 4/ S-70

JQ-IMEG
100 GLASS STREET
SUITE 202
DALLAS, TX 75207
P: 972.392.7340
TBPELS FIRM F-26651
PROJECT NUMBER : 26021466.00
JQ-IMEG RESERVES PROPRIETARY RIGHTS, INCLUDING COPYRIGHTS, TO THIS DRAWING AND THE DATA SHOWN THEREON. SAID DRAWING AND/OR DATA ARE THE EXCLUSIVE PROPERTY OF JQ-IMEG AND SHALL NOT BE USED OR REPRODUCED FOR ANY OTHER PROJECT WITHOUT THE EXPRESS WRITTEN APPROVAL AND PARTICIPATION OF JQ-IMEG. ©2026 JQ-IMEG LLC

MBROH ENGINEERING
11757 KATY FWY,
SUITE 625
HOUSTON, TX 77077
713-468-2545

INTERIM REVIEW DOCUMENTS
(NOT INTENDED FOR BIDDING, PERMIT OR CONSTRUCTION PURPOSES)
JOHN D. MISCHKOT
TEXAS REGISTRATION No: 107566
DATE: 11/02/2026

SURVEYED BY:
FB NO.

CITY OF HOUSTON
HOUSTON PUBLIC WORKS

WHITE OAKS WWTP IMPROVEMENTS

STRUCTURAL

CLARIFIERS ELEVATIONS I

WBS NUMBER	FOR CITY OF HOUSTON USE ONLY
R-000265-0158-3	
DRAWING SCALE	
As indicated	
CITY OF HOUSTON, PM	
SHAHIDUR RAHMAN, PE	
SHEET NO. 72 OF 189	

S-36

Autodesk Docs://White Oaks Wastewater Treatment Plant Improvements/25004152.01_CoH WHITE OAK_Clarifiers_R25.rvt

11/3/2026 4:23:31 PM

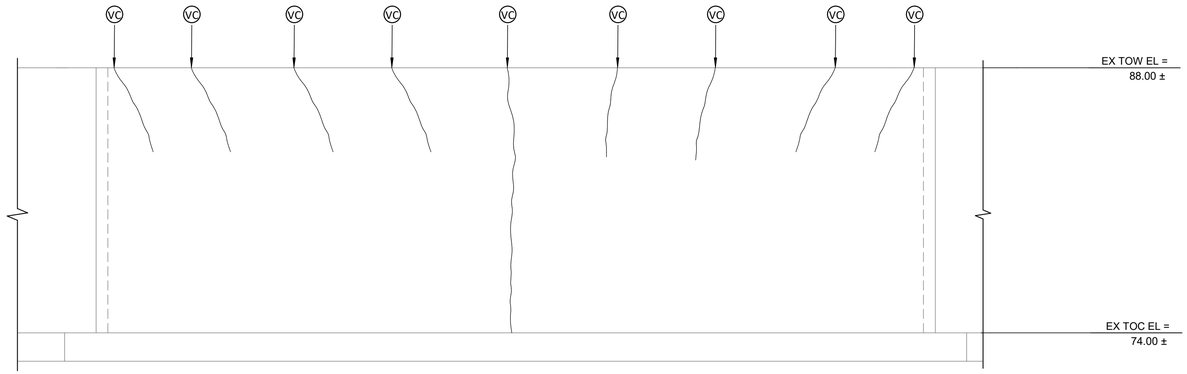

SOUTHWEST EXTERIOR
ELEVATION

DETAIL 1 / S-34

SCALE: 1/4" = 1'-0"

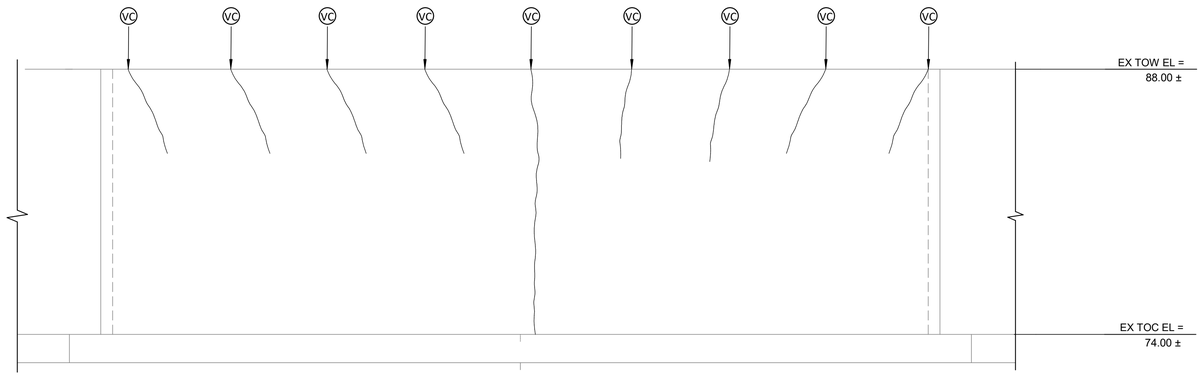

WEST EXTERIOR
ELEVATION

DETAIL 2 / S-34

SCALE: 1/4" = 1'-0"

NO.	DATE	REVISION	APP.

NOTES BY SYMBOL: "(X)"

- (DC) DIAGONAL CRACK - REPAIR PER "PRESSURE INJECTED URETHANE" NOTE, PER DETAIL 2/ S-70
- (HC) HORIZONTAL CRACK - AT CONCRETE WALLS, REPAIR PER "PRESSURE INJECTED URETHANE" NOTES, DWG. NO. CRWS-S-507; AT CONCRETE WALKWAYS, REPAIR PER "SEALANT" NOTES, 2/ S-70
- (VC) VERTICAL CRACK - REPAIR PER PRESSURE INJECTED URETHANE" NOTE, PER DETAIL 2/ S-70
- (DE) DELAMINATED CONCRETE - REPAIR PER "CONCRETE REPAIR MORTAR" NOTE, PER DETAIL 1/ S-70
- (ES) EXPOSED REINFORCING STEEL - REPAIR PER DETAIL 1/ S-70
- (SP) SPALLED OR DETERIORATED CONCRETE - REPAIR PER "CONCRETE REPAIR MORTAR" NOTE, PER DETAIL 1/ S-70
- (EJ) EXPANSION JOINT REPAIR - REPAIR PER "EXPANSION JOINT SEAL" NOTE, PER DETAIL 4/ S-70

JQ-IMEG
100 GLASS STREET
SUITE 202
DALLAS, TX 75207
P: 972.392.7340
TBPELS FIRM F-26651
PROJECT NUMBER: 26021466.00
JQ-IMEG RESERVES PROPRIETARY RIGHTS, INCLUDING COPYRIGHTS, TO THIS DRAWING AND THE DATA SHOWN THEREON. SAID DRAWING AND/OR DATA ARE THE EXCLUSIVE PROPERTY OF JQ-IMEG AND SHALL NOT BE USED OR REPRODUCED FOR ANY OTHER PROJECT WITHOUT THE EXPRESS WRITTEN APPROVAL AND PARTICIPATION OF JQ-IMEG. ©2026 JQ-IMEG LLC

MBROH ENGINEERING
11757 KATY FWY,
SUITE 625
HOUSTON, TX 77077
713-468-2545

INTERIM REVIEW DOCUMENTS
(NOT INTENDED FOR BIDDING, PERMIT OR CONSTRUCTION PURPOSES)
JOHN D. MBOH
TEXAS REGISTRATION No: 107566
DATE: 11/02/2026

SURVEYED BY:

FB NO.

CITY OF HOUSTON
HOUSTON PUBLIC WORKS

WHITE OAKS WWTP IMPROVEMENTS

STRUCTURAL

CLARIFIERS ELEVATIONS II

WBS NUMBER	FOR CITY OF HOUSTON USE ONLY
R-000265-0158-3	
DRAWING SCALE	
As indicated	
CITY OF HOUSTON, PM	
SHAHIDUR RAHMAN, PE	

S-37 SHEET NO. 73 OF 189

Autodesk Docs://White Oaks Wastewater Treatment Plant Improvements/25004152.01_Colt WHITE OAK_Clarifiers_R25.rvt

11/3/2026 4:23:32 PM

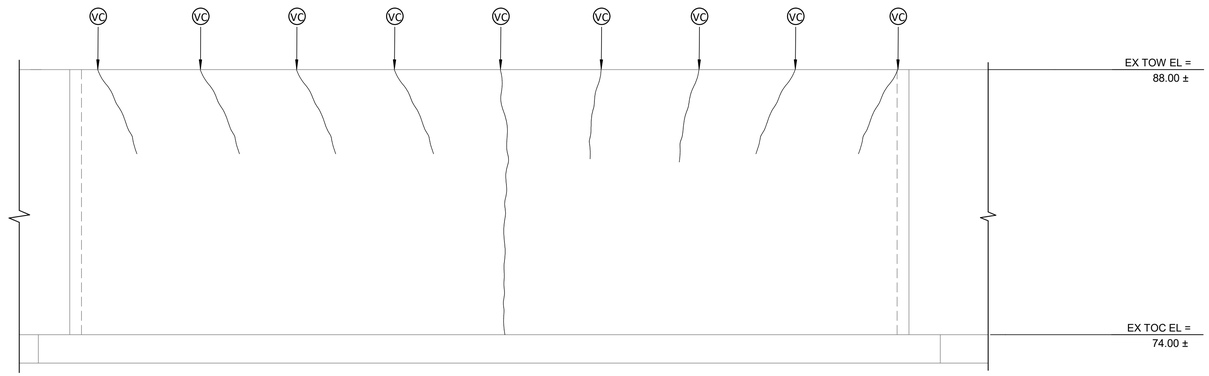

NORTHWEST EXTERIOR
ELEVATION

DETAIL 1 S-34

SCALE: 1/4" = 1'-0"

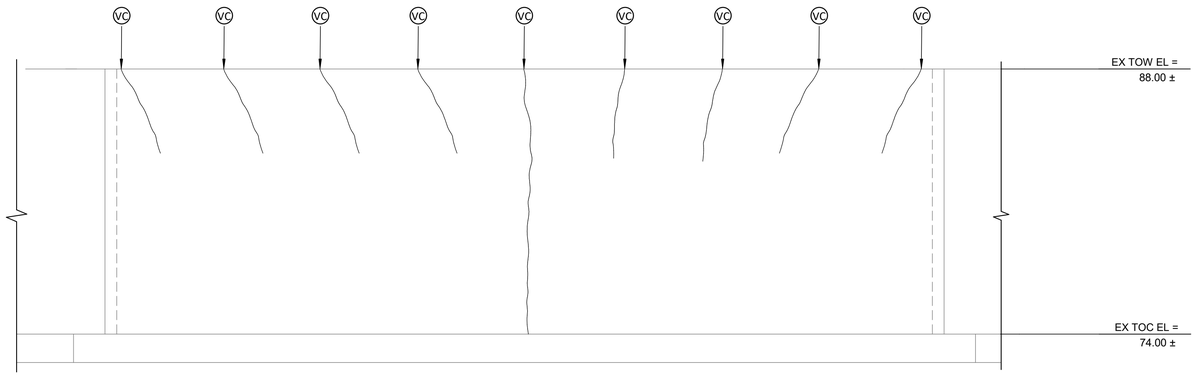

NORTH EXTERIOR
ELEVATION

DETAIL 2 S-34

SCALE: 1/4" = 1'-0"

NO.	DATE	REVISION	APP.

NOTES BY SYMBOL: "(X)"

(DC) DIAGONAL CRACK - REPAIR PER "PRESSURE INJECTED URETHANE" NOTE, PER DETAIL 2/ S-70

(HC) HORIZONTAL CRACK - AT CONCRETE WALLS, REPAIR PER "PRESSURE INJECTED URETHANE" NOTES, DWG. NO. CRWS-S-507; AT CONCRETE WALKWAYS, REPAIR PER "SEALANT" NOTES, 2/ S-70

(VC) VERTICAL CRACK - REPAIR PER PRESSURE INJECTED URETHANE" NOTE, PER DETAIL 2/ S-70

(DE) DELAMINATED CONCRETE - REPAIR PER "CONCRETE REPAIR MORTAR" NOTE, PER DETAIL 1/ S-70

(ES) EXPOSED REINFORCING STEEL - REPAIR PER DETAIL 1/ S-70

(SP) SPALLED OR DETERIORATED CONCRETE - REPAIR PER "CONCRETE REPAIR MORTAR" NOTE, PER DETAIL 1/ S-70

(EJ) EXPANSION JOINT REPAIR - REPAIR PER "EXPANSION JOINT SEAL" NOTE, PER DETAIL 4/ S-70

JQ-IMEG
100 GLASS STREET
SUITE 202
DALLAS, TX 75207
P: 972.392.7340
TBPELS FIRM F-26651

PROJECT NUMBER: 26021466.00

JQ-IMEG RESERVES PROPRIETARY RIGHTS, INCLUDING COPYRIGHTS, TO THIS DRAWING AND THE DATA SHOWN THEREON. SAID DRAWING AND/OR DATA ARE THE EXCLUSIVE PROPERTY OF JQ-IMEG AND SHALL NOT BE USED OR REPRODUCED FOR ANY OTHER PROJECT WITHOUT THE EXPRESS WRITTEN APPROVAL AND PARTICIPATION OF JQ-IMEG. ©2026 JQ-IMEG LLC

MBROH ENGINEERING
11757 KATY FWY,
SUITE 625
HOUSTON, TX 77077
713-468-2545

SURVEYED BY:

FB NO.

INTERIM REVIEW DOCUMENTS
(NOT INTENDED FOR BIDDING, PERMIT OR CONSTRUCTION PURPOSES)

JOHN D. MISCHKOT
TEXAS REGISTRATION No: 107566
DATE: 11/02/2026

CITY OF HOUSTON
HOUSTON PUBLIC WORKS

WHITE OAKS
WWTP IMPROVEMENTS

STRUCTURAL

CLARIFIERS ELEVATIONS III

WBS NUMBER	FOR CITY OF HOUSTON USE ONLY
R-000265-0158-3	
DRAWING SCALE	
As indicated	
CITY OF HOUSTON, PM	
SHAHIDUR RAHMAN, PE	

S-38 SHEET NO. 74 OF 189

Autodesk Docs://White Oaks Wastewater Treatment Plant Improvements/25004152.01_Colt WHITE OAK_Clarifiers_R25.rvt

11/3/2026 4:23:32 PM

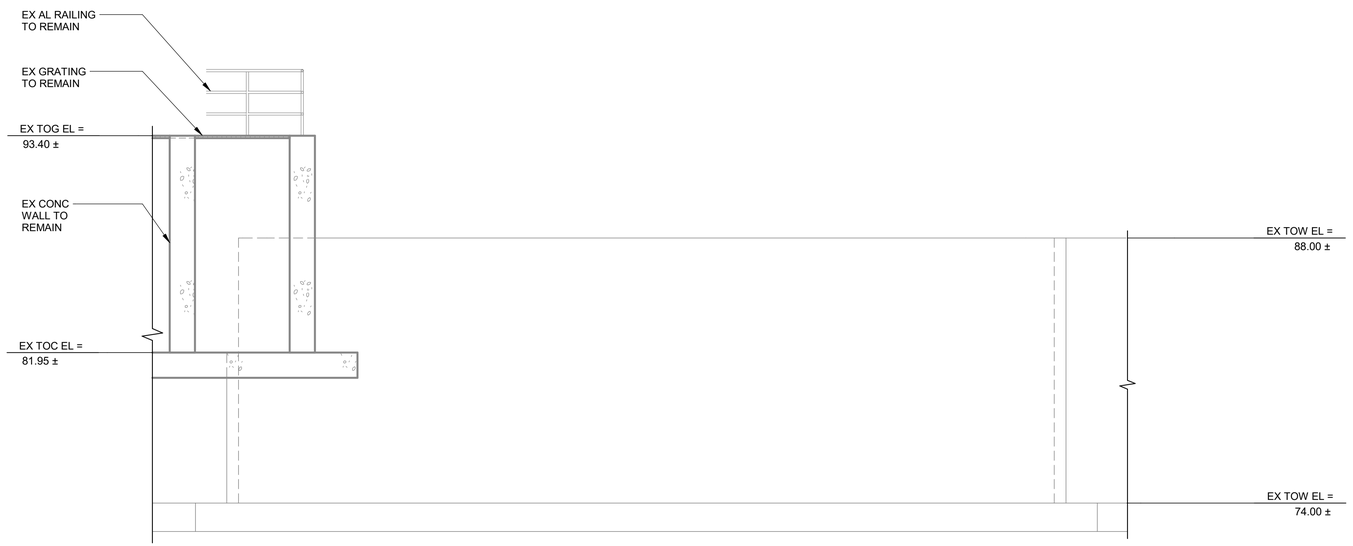

NORTHEAST EXTERIOR
ELEVATION

DETAIL 1 / S-34

SCALE: 1/4" = 1'-0"



NORTHWEST EXTERIOR
ELEVATION

DETAIL 2 / S-34

SCALE: 1/4" = 1'-0"

NO.	DATE	REVISION	APP.

NOTES BY SYMBOL: "(X)"

- (DC) DIAGONAL CRACK - REPAIR PER "PRESSURE INJECTED URETHANE" NOTE, PER DETAIL 2/ S-70
- (HC) HORIZONTAL CRACK - AT CONCRETE WALLS, REPAIR PER "PRESSURE INJECTED URETHANE" NOTES, DWG. NO. CRWS-S-507; AT CONCRETE WALKWAYS, REPAIR PER "SEALANT" NOTES, 2/ S-70
- (VC) VERTICAL CRACK - REPAIR PER PRESSURE INJECTED URETHANE" NOTE, PER DETAIL 2/ S-70
- (DE) DELAMINATED CONCRETE - REPAIR PER "CONCRETE REPAIR MORTAR" NOTE, PER DETAIL 1/ S-70
- (ES) EXPOSED REINFORCING STEEL - REPAIR PER DETAIL 1/ S-70
- (SP) SPALLED OR DETERIORATED CONCRETE - REPAIR PER "CONCRETE REPAIR MORTAR" NOTE, PER DETAIL 1/ S-70
- (EJ) EXPANSION JOINT REPAIR - REPAIR PER "EXPANSION JOINT SEAL" NOTE, PER DETAIL 4/ S-70

JQ-IMEG
100 GLASS STREET
SUITE 202
DALLAS, TX 75207
P: 972.392.7340
TBPELS FIRM F-26651
PROJECT NUMBER : 26021466.00
JQ-IMEG RESERVES PROPRIETARY RIGHTS, INCLUDING COPYRIGHTS, TO THIS DRAWING AND THE DATA SHOWN THEREON. SAID DRAWING AND/OR DATA ARE THE EXCLUSIVE PROPERTY OF JQ-IMEG AND SHALL NOT BE USED OR REPRODUCED FOR ANY OTHER PROJECT WITHOUT THE EXPRESS WRITTEN APPROVAL AND PARTICIPATION OF JQ-IMEG. ©2026 JQ-IMEG LLC

MBROH ENGINEERING
11757 KATY FWY,
SUITE 625
HOUSTON, TX 77077
713-468-2545

INTERIM REVIEW DOCUMENTS
(NOT INTENDED FOR BIDDING, PERMIT OR CONSTRUCTION PURPOSES)
JOHN D. MISCHKOT
TEXAS REGISTRATION No: 107566
DATE: 11/02/2026

SURVEYED BY:

FB NO.

CITY OF HOUSTON
HOUSTON PUBLIC WORKS

WHITE OAKS WWTP IMPROVEMENTS

STRUCTURAL

CLARIFIERS ELEVATIONS IV

WBS NUMBER	FOR CITY OF HOUSTON USE ONLY
R-000265-0158-3	
DRAWING SCALE	
As indicated	
CITY OF HOUSTON, PM	
SHAHIDUR RAHMAN, PE	

S-39 SHEET NO. 75 OF 189

Autodesk Docs://White Oaks Wastewater Treatment Plant Improvements/25004152.01_CoH WHITE OAK_Clarifiers_R25.rvt

11/3/2026 4:23:32 PM



NORTH EXTERIOR
ELEVATION

DETAIL 1 / S-34

SCALE: 1/4" = 1'-0"



NORTHEAST EXTERIOR
ELEVATION

DETAIL 2 / S-34

SCALE: 1/4" = 1'-0"

NO.	DATE	REVISION	APP.

NOTES BY SYMBOL: "(X)"

- (DC) DIAGONAL CRACK - REPAIR PER "PRESSURE INJECTED URETHANE" NOTE, PER DETAIL 2/ S-70
- (HC) HORIZONTAL CRACK - AT CONCRETE WALLS, REPAIR PER "PRESSURE INJECTED URETHANE" NOTES, DWG. NO. CRWS-S-507; AT CONCRETE WALKWAYS, REPAIR PER "SEALANT" NOTES, 2/ S-70
- (VC) VERTICAL CRACK - REPAIR PER PRESSURE INJECTED URETHANE" NOTE, PER DETAIL 2/ S-70
- (DE) DELAMINATED CONCRETE - REPAIR PER "CONCRETE REPAIR MORTAR" NOTE, PER DETAIL 1/ S-70
- (ES) EXPOSED REINFORCING STEEL - REPAIR PER DETAIL 1/ S-70
- (SP) SPALLED OR DETERIORATED CONCRETE - REPAIR PER "CONCRETE REPAIR MORTAR" NOTE, PER DETAIL 1/ S-70
- (EJ) EXPANSION JOINT REPAIR - REPAIR PER "EXPANSION JOINT SEAL" NOTE, PER DETAIL 4/ S-70

JQ-IMEG
100 GLASS STREET
SUITE 202
DALLAS, TX 75207
P: 972.392.7340
TBPELS FIRM F-26651
PROJECT NUMBER : 26021466.00
JQ-IMEG RESERVES PROPRIETARY RIGHTS, INCLUDING COPYRIGHTS, TO THIS DRAWING AND THE DATA SHOWN THEREON. SAID DRAWING AND/OR DATA ARE THE EXCLUSIVE PROPERTY OF JQ-IMEG AND SHALL NOT BE USED OR REPRODUCED FOR ANY OTHER PROJECT WITHOUT THE EXPRESS WRITTEN APPROVAL AND PARTICIPATION OF JQ-IMEG. ©2026 JQ-IMEG LLC

MBROH ENGINEERING 20
11757 KATY FWY,
SUITE 625
HOUSTON, TX 77077
713-468-2545

INTERIM REVIEW DOCUMENTS
(NOT INTENDED FOR BIDDING, PERMIT OR CONSTRUCTION PURPOSES)
JOHN D. MISCHKOT
TEXAS REGISTRATION No: 107566
DATE: 11/02/2026

SURVEYED BY:
FB NO.

CITY OF HOUSTON
HOUSTON PUBLIC WORKS

WHITE OAKS WWTP IMPROVEMENTS

STRUCTURAL

CLARIFIERS ELEVATIONS V

WBS NUMBER	FOR CITY OF HOUSTON USE ONLY
R-000265-0158-3	
DRAWING SCALE	
As indicated	
CITY OF HOUSTON, PM	
SHAHIDUR RAHMAN, PE	
SHEET NO. 76 OF 189	

S-40

Autodesk Docs://White Oaks Wastewater Treatment Plant Improvements/25004152.01_COH WHITE OAK_Clarifiers_R25.rvt

11/3/2026 4:23:33 PM

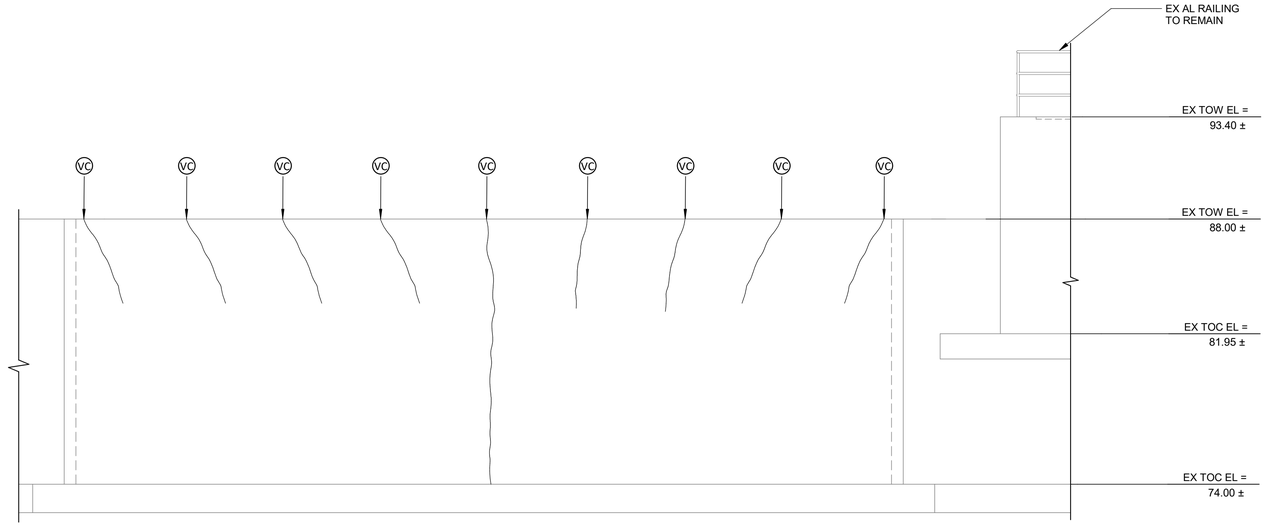

SOUTHEAST EXTERIOR
ELEVATION

ELEVATION

1/4" = 1'-0"

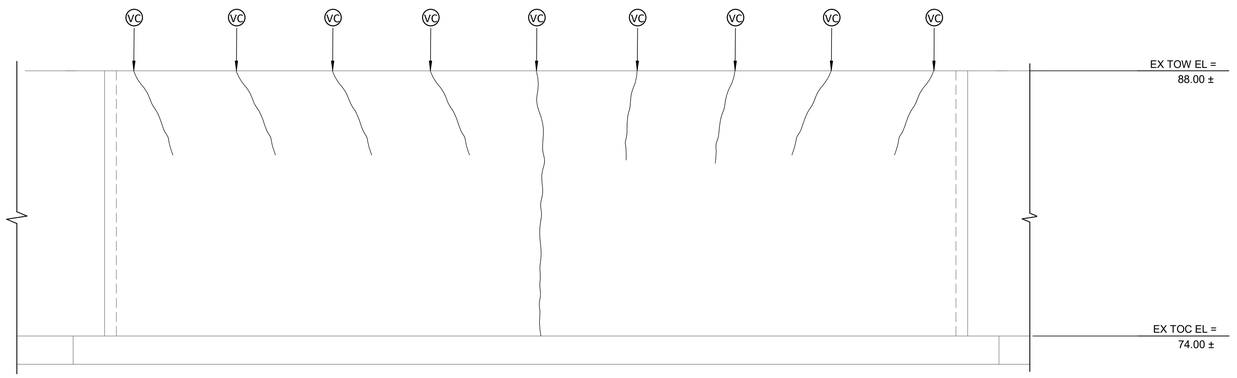

SOUTH EXTERIOR
ELEVATION

ELEVATION

1/4" = 1'-0"

NO.	DATE	REVISION	APP.

NOTES BY SYMBOL: "(X)"

- (DC) DIAGONAL CRACK - REPAIR PER "PRESSURE INJECTED URETHANE" NOTE, PER DETAIL 2/ S-70
- (HC) HORIZONTAL CRACK - AT CONCRETE WALLS, REPAIR PER "PRESSURE INJECTED URETHANE" NOTES, DWG. NO. CRWS-S-507; AT CONCRETE WALKWAYS, REPAIR PER "SEALANT" NOTES, 2/ S-70
- (VC) VERTICAL CRACK - REPAIR PER PRESSURE INJECTED URETHANE" NOTE, PER DETAIL 2/ S-70
- (DE) DELAMINATED CONCRETE - REPAIR PER "CONCRETE REPAIR MORTAR" NOTE, PER DETAIL 1/ S-70
- (ES) EXPOSED REINFORCING STEEL - REPAIR PER DETAIL 1/ S-70
- (SP) SPALLED OR DETERIORATED CONCRETE - REPAIR PER "CONCRETE REPAIR MORTAR" NOTE, PER DETAIL 1/ S-70
- (EJ) EXPANSION JOINT REPAIR - REPAIR PER "EXPANSION JOINT SEAL" NOTE, PER DETAIL 4/ S-70

JQ-IMEG
100 GLASS STREET
SUITE 202
DALLAS, TX 75207
P: 972.392.7340
TBPELS FIRM F-26651
PROJECT NUMBER: 26021466.00
JQ-IMEG RESERVES PROPRIETARY RIGHTS, INCLUDING COPYRIGHTS, TO THIS DRAWING AND THE DATA SHOWN THEREON. SAID DRAWING AND/OR DATA ARE THE EXCLUSIVE PROPERTY OF JQ-IMEG AND SHALL NOT BE USED OR REPRODUCED FOR ANY OTHER PROJECT WITHOUT THE EXPRESS WRITTEN APPROVAL AND PARTICIPATION OF JQ-IMEG. ©2026 JQ-IMEG LLC

MBROH ENGINEERING
11757 KATY FWY,
SUITE 625
HOUSTON, TX 77077
713-468-2545

SURVEYED BY:

FB NO.

INTERIM REVIEW DOCUMENTS
(NOT INTENDED FOR BIDDING, PERMIT OR CONSTRUCTION PURPOSES)
JOHN D. MROHKOT
TEXAS REGISTRATION No: 107566
DATE: 11/02/2026

CITY OF HOUSTON
HOUSTON PUBLIC WORKS

WHITE OAKS
WWTP IMPROVEMENTS

STRUCTURAL

CLARIFIERS ELEVATIONS VI

WBS NUMBER	FOR CITY OF HOUSTON USE ONLY
R-000265-0158-3	
DRAWING SCALE	
As indicated	
CITY OF HOUSTON, PM	
SHAHIDUR RAHMAN, PE	
SHEET NO. 77 OF 189	

S-41

Autodesk Docs://White Oaks Wastewater Treatment Plant Improvements/25004152.01_Colt WHITE OAK_Clarifiers_R25.rvt

11/3/2026 4:23:33 PM

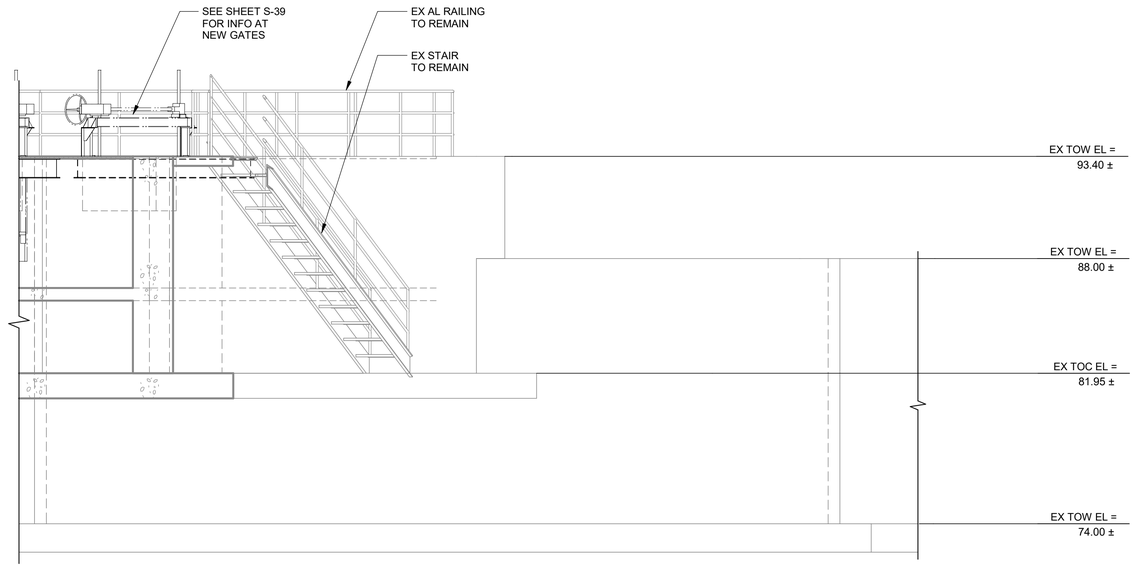

SOUTHWEST EXTERIOR
ELEVATION

DETAIL 2 / S-34

SCALE: 1/4" = 1'-0"

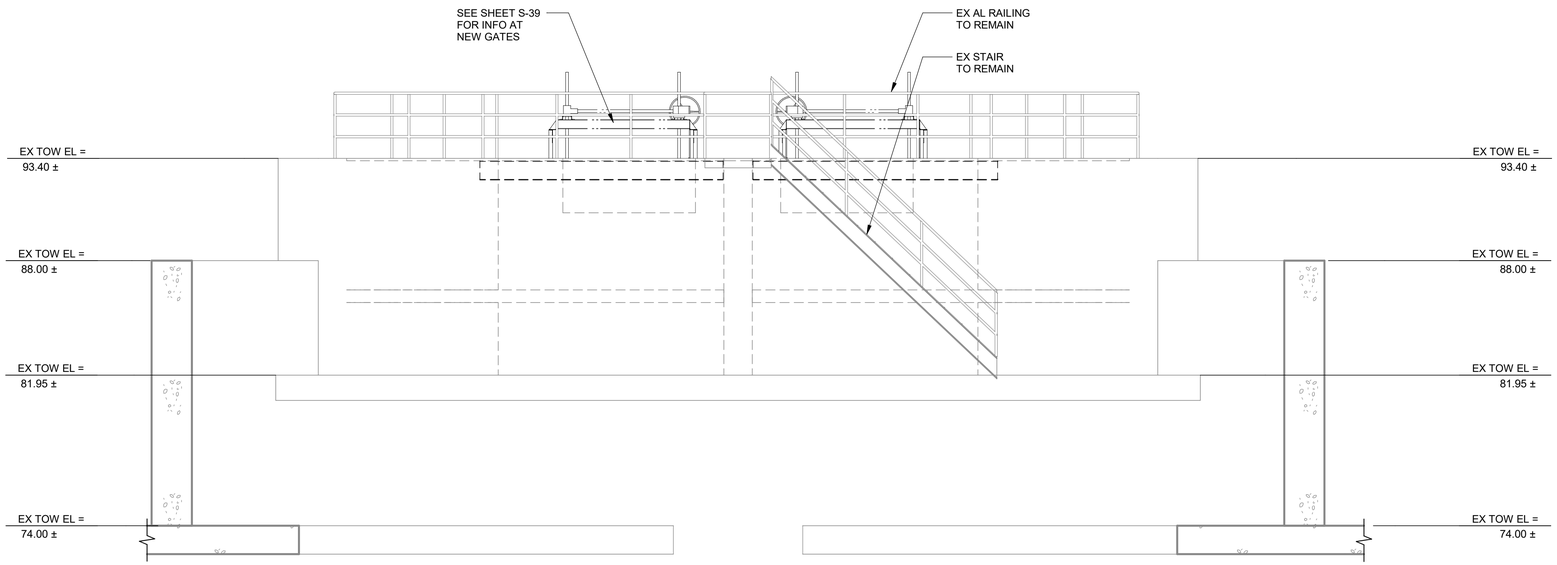

SOUTH EXTERIOR
ELEVATION

DETAIL 1 / S-34

SCALE: 1/4" = 1'-0"

NO.	DATE	REVISION	APP.

NOTES BY SYMBOL: "(X)"

- (DC) DIAGONAL CRACK - REPAIR PER "PRESSURE INJECTED URETHANE" NOTE, PER DETAIL 2/ S-70
- (HC) HORIZONTAL CRACK - AT CONCRETE WALLS, REPAIR PER "PRESSURE INJECTED URETHANE" NOTES, DWG. NO. CRWS-S-507; AT CONCRETE WALKWAYS, REPAIR PER "SEALANT" NOTES, 2/ S-70
- (VC) VERTICAL CRACK - REPAIR PER PRESSURE INJECTED URETHANE" NOTE, PER DETAIL 2/ S-70
- (DE) DELAMINATED CONCRETE - REPAIR PER "CONCRETE REPAIR MORTAR" NOTE, PER DETAIL 1/ S-70
- (ES) EXPOSED REINFORCING STEEL - REPAIR PER DETAIL 1/ S-70
- (SP) SPALLED OR DETERIORATED CONCRETE - REPAIR PER "CONCRETE REPAIR MORTAR" NOTE, PER DETAIL 1/ S-70
- (EJ) EXPANSION JOINT REPAIR - REPAIR PER "EXPANSION JOINT SEAL" NOTE, PER DETAIL 4/ S-70

JQ-IMEG
100 GLASS STREET
SUITE 202
DALLAS, TX 75207
P: 972.392.7340
TBPELS FIRM F-26651
PROJECT NUMBER : 26021466.00

JQ-IMEG RESERVES PROPRIETARY RIGHTS, INCLUDING COPYRIGHTS, TO THIS DRAWING AND THE DATA SHOWN THEREON. SAID DRAWING AND/OR DATA ARE THE EXCLUSIVE PROPERTY OF JQ-IMEG AND SHALL NOT BE USED OR REPRODUCED FOR ANY OTHER PROJECT WITHOUT THE EXPRESS WRITTEN APPROVAL AND PARTICIPATION OF JQ-IMEG. ©2026 JQ-IMEG LLC

MBROH ENGINEERING
11757 KATY FWY,
SUITE 625
HOUSTON, TX 77077
713-468-2545

INTERIM REVIEW DOCUMENTS

NOT INTENDED FOR BIDDING, PERMIT OR CONSTRUCTION PURPOSES)

JOHN D. MBOKHOT
TEXAS REGISTRATION No: 107566
DATE: 11/02/2026

SURVEYED BY:

FB NO.

CITY OF HOUSTON
HOUSTON PUBLIC WORKS

WHITE OAKS WWTP IMPROVEMENTS

STRUCTURAL

CLARIFIERS ELEVATIONS VII

WBS NUMBER	FOR CITY OF HOUSTON USE ONLY
R-000265-0158-3	
DRAWING SCALE	
As indicated	
CITY OF HOUSTON, PM	
SHAHIDUR RAHMAN, PE	

S-42

SHEET NO. 78 OF 189

Autodesk Docs://White Oaks Wastewater Treatment Plant Improvements/25004152.01_Colt WHITE OAK_Clarifiers_R25.rvt

11/3/2026 4:26:00 PM

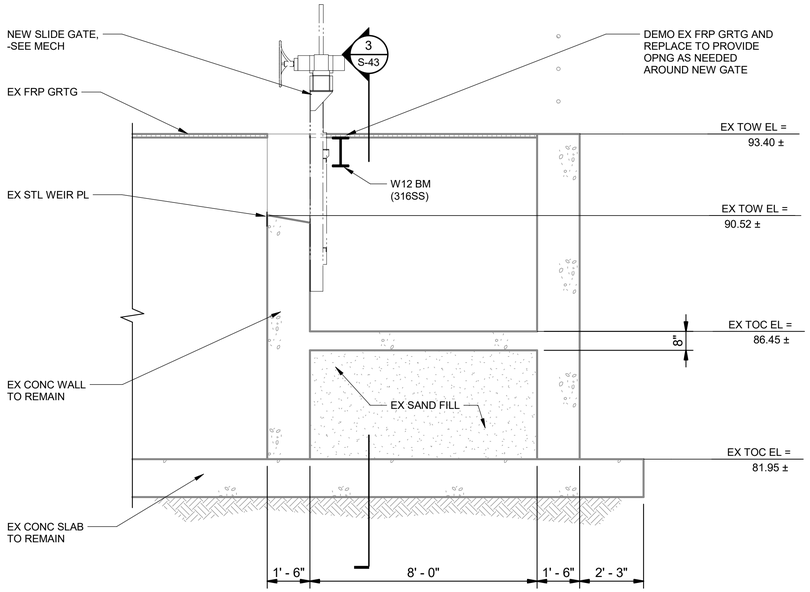

SLIDE GATE

DETAIL 1/S-35

SCALE: 3/8" = 1'-0"

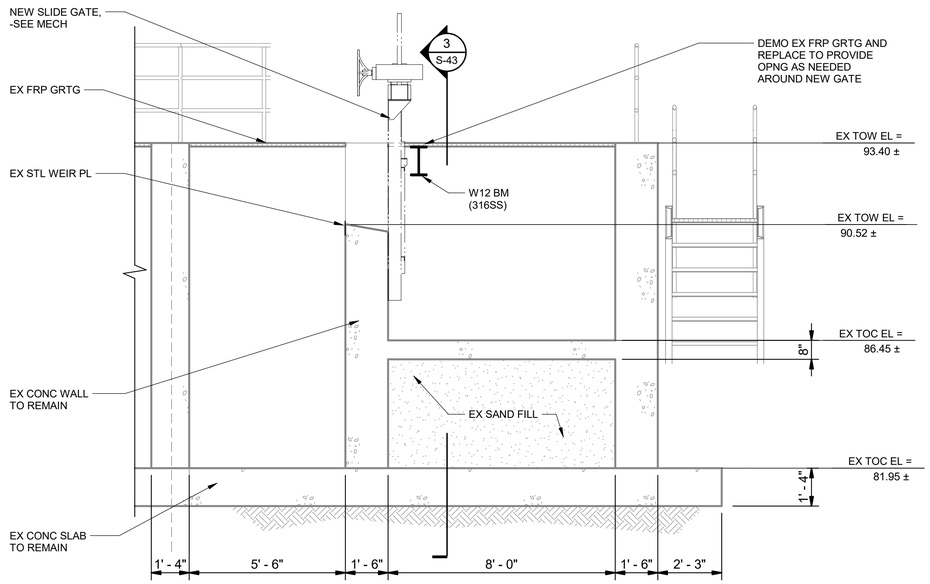

SLIDE GATE

DETAIL 2/S-35

SCALE: 3/8" = 1'-0"

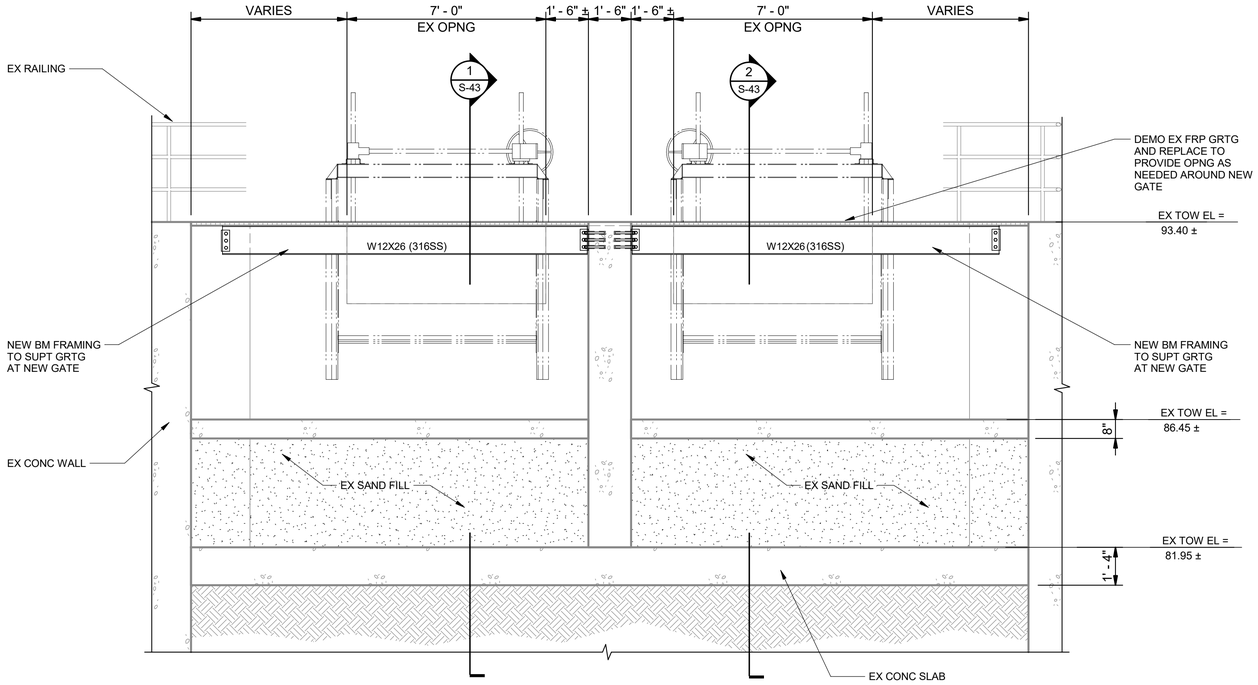

SLIDE GATE

DETAIL 3/S-35

SCALE: 3/8" = 1'-0"

NO.	DATE	REVISION	APP.

JQ-IMEG
100 GLASS STREET
SUITE 202
DALLAS, TX 75207
P: 972.392.7340
TBPELS FIRM F-26651

PROJECT NUMBER: 26021466.00

JQ-IMEG RESERVES PROPRIETARY RIGHTS, INCLUDING COPYRIGHTS, TO THIS DRAWING AND THE DATA SHOWN THEREON. SAID DRAWING AND/OR DATA ARE THE EXCLUSIVE PROPERTY OF JQ-IMEG AND SHALL NOT BE USED OR REPRODUCED FOR ANY OTHER PROJECT WITHOUT THE EXPRESS WRITTEN APPROVAL AND PARTICIPATION OF JQ-IMEG. ©2026 JQ-IMEG LLC

MBROH ENGINEERING 20
11757 KATY FWY,
SUITE 625
HOUSTON, TX 77077
713-468-2545

INTERIM REVIEW DOCUMENTS

NOT INTENDED FOR BIDDING, PERMIT OR CONSTRUCTION PURPOSES

JOHN D. MBOH
TEXAS REGISTRATION No: 107566
DATE: 11/02/2026

SURVEYED BY:

FB NO.

CITY OF HOUSTON
HOUSTON PUBLIC WORKS

WHITE OAKS
WWTP IMPROVEMENTS

STRUCTURAL

CLARIFIERS SECTIONS AND DETAILS I

WBS NUMBER	FOR CITY OF HOUSTON USE ONLY
R-000265-0158-3	
DRAWING SCALE	
3/8" = 1'-0"	
CITY OF HOUSTON, PM	
SHAHIDUR RAHMAN, PE	

S-43 SHEET NO. 79 OF 189

Autodesk Docs://White Oaks Wastewater Treatment Plant Improvements/25004152.01_Colt WHITE OAK_Clarifiers_R25.rvt

11/3/2026 4:23:34 PM

SHEET INTENTIONALLY LEFT BLANK

NO.	DATE	REVISION	APP.

JQ-IMEG
100 GLASS STREET
SUITE 202
DALLAS, TX 75207
P: 972.392.7340
TBPELS FIRM F-26651

PROJECT NUMBER : 26021466.00

JQ-IMEG RESERVES PROPRIETARY RIGHTS, INCLUDING COPYRIGHTS, TO THIS DRAWING IN PRINTED AND ELECTRONIC FORMS. SAID DRAWING AND DATA ARE THE EXCLUSIVE PROPERTY OF JQ-IMEG AND SHALL NOT BE USED OR REPRODUCED FOR ANY OTHER PROJECT WITHOUT THE EXPRESS WRITTEN APPROVAL AND PARTICIPATION OF JQ-IMEG. ©2026 JQ-IMEG LLC

MBROH ENGINEERING 20
11757 KATY FWY,
SUITE 625
HOUSTON, TX 77077
713-468-2545

INTERIM REVIEW DOCUMENTS
(NOT INTENDED FOR BIDDING, PERMIT OR CONSTRUCTION PURPOSES)
JOHN D. MISCHKOT
TEXAS REGISTRATION No: 107566
DATE: 11/03/2026

SURVEYED BY:
FB NO.

CITY OF HOUSTON
HOUSTON PUBLIC WORKS

WHITE OAKS
WWTP IMPROVEMENTS
STRUCTURAL
CLARIFIERS SECTIONS AND DETAILS II

WBS NUMBER	FOR CITY OF HOUSTON USE ONLY
R-000265-0158-3	
DRAWING SCALE	
CITY OF HOUSTON, PM	
SHAHIDUR RAHMAN, PE	
SHEET NO. 80 OF 189	

S-44

Autodesk Docs://White Oaks Wastewater Treatment Plant Improvements/25004152.01_CoH WHITE OAK_Clarifiers_R25.rvt

11/3/2026 4:56:21 PM

PLAN NOTES:

1. THE CONTRACTOR SHALL FIELD VERIFY DIMENSIONS SHOWN TO EXISTING STRUCTURES AND MECHANICAL ELEMENTS PRIOR TO BEGINNING WORK. NOTIFY THE ENGINEER OF ANY DISCREPANCIES IDENTIFIED.
2. EXISTING STRUCTURE SHOWN IS BASED ON THE FOLLOWING RECORD DOCUMENTS:
   A. WHITE OAK MUD EXPANSION, 1978, FILE NO. 19525

NO.	DATE	REVISION	APP.

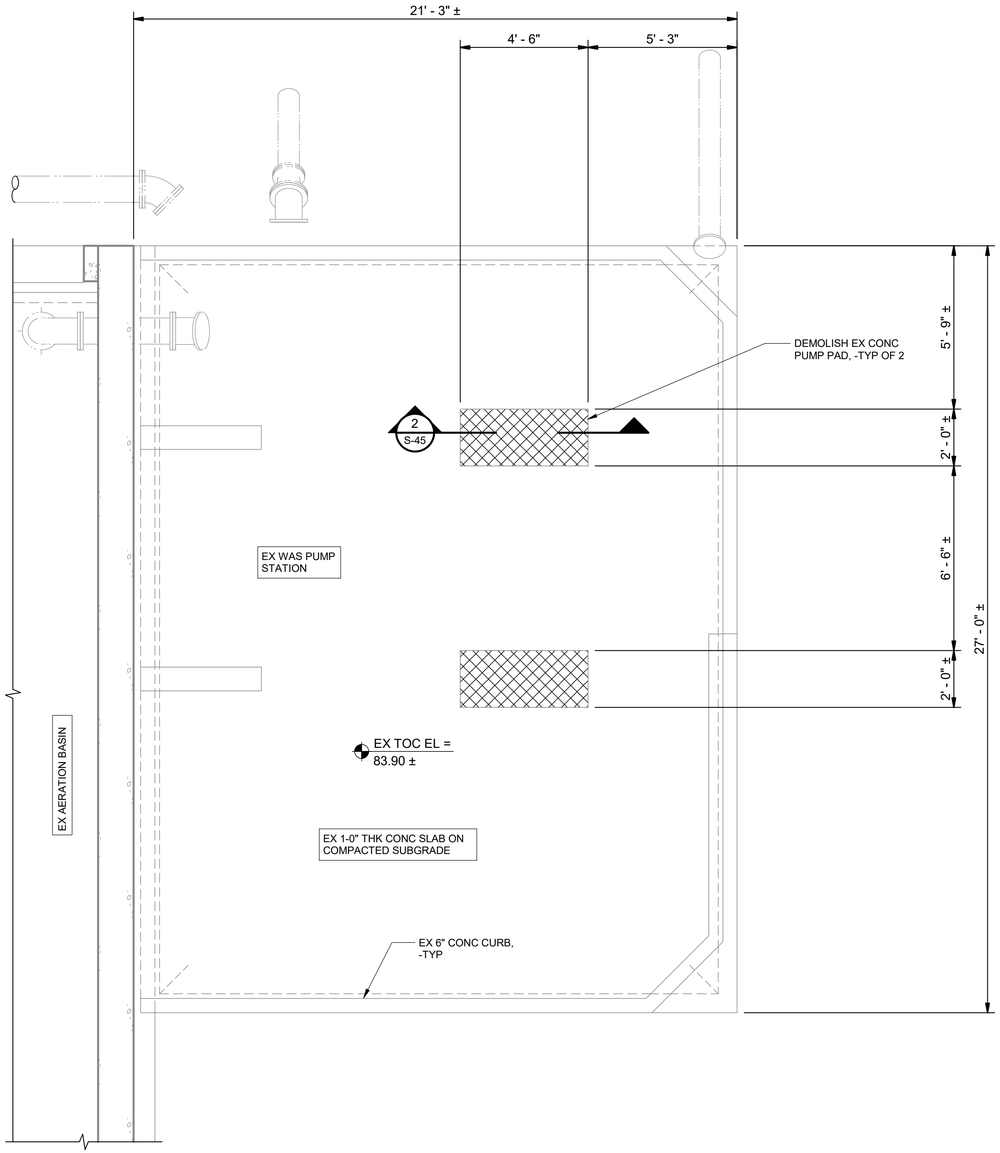

WAS PUMP STATION DEMOLITION PLAN

SCALE: 3/8" = 1'-0"

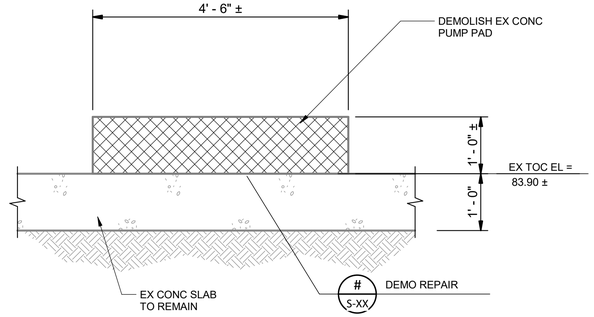

WAS PS DEMO

SECTION 2 / S-45

SCALE: 3/4" = 1'-0"

JQ-IMEG
100 GLASS STREET
SUITE 202
DALLAS, TX 75207
P: 972.392.7340
TBPELS FIRM F-26651
PROJECT NUMBER : 26021466.00
JQ-IMEG RESERVES PROPRIETARY RIGHTS, INCLUDING COPYRIGHTS, TO THIS DRAWING AND THE DATA SHOWN THEREON. SAID DRAWING AND/OR DATA ARE THE EXCLUSIVE PROPERTY OF JQ-IMEG AND SHALL NOT BE USED OR REPRODUCED FOR ANY OTHER PROJECT WITHOUT THE EXPRESS WRITTEN APPROVAL AND PARTICIPATION OF JQ-IMEG. ©2026 JQ-IMEG LLC

MBROH 20 ENGINEERING
11757 KATY FWY,
SUITE 625
HOUSTON, TX 77077
713-468-2545

INTERIM REVIEW DOCUMENTS
(NOT INTENDED FOR BIDDING, PERMIT OR CONSTRUCTION PURPOSES)

JOHN D. MISCHKOT
TEXAS REGISTRATION No: 107566
DATE: 11/02/2026

SURVEYED BY:

FB NO.

CITY OF HOUSTON
HOUSTON PUBLIC WORKS

WHITE OAKS WWTP IMPROVEMENTS

STRUCTURAL

WAS PUMP STATION DEMOLITION PLAN

WBS NUMBER	FOR CITY OF HOUSTON USE ONLY
R-000265-0158-3	
DRAWING SCALE	
As indicated	
CITY OF HOUSTON, PM	
SHAHIDUR RAHMAN, PE	

S-45

SHEET NO. 81 OF 189

Autodesk Docs://White Oaks Wastewater Treatment Plant Improvements/25004152.01_CoH WHITE OAK_Improvements_ExAB_R25.rvt

11/3/2026 4:56:22 PM

PLAN NOTES:

1. THE CONTRACTOR SHALL FIELD VERIFY DIMENSIONS SHOWN TO EXISTING STRUCTURES AND MECHANICAL ELEMENTS PRIOR TO BEGINNING WORK. NOTIFY THE ENGINEER OF ANY DISCREPANCIES IDENTIFIED.

2. EXISTING STRUCTURE SHOWN IS BASED ON THE FOLLOWING RECORD DOCUMENTS:
   A. WHITE OAK MUD EXPANSION, 1978, FILE NO. 19525

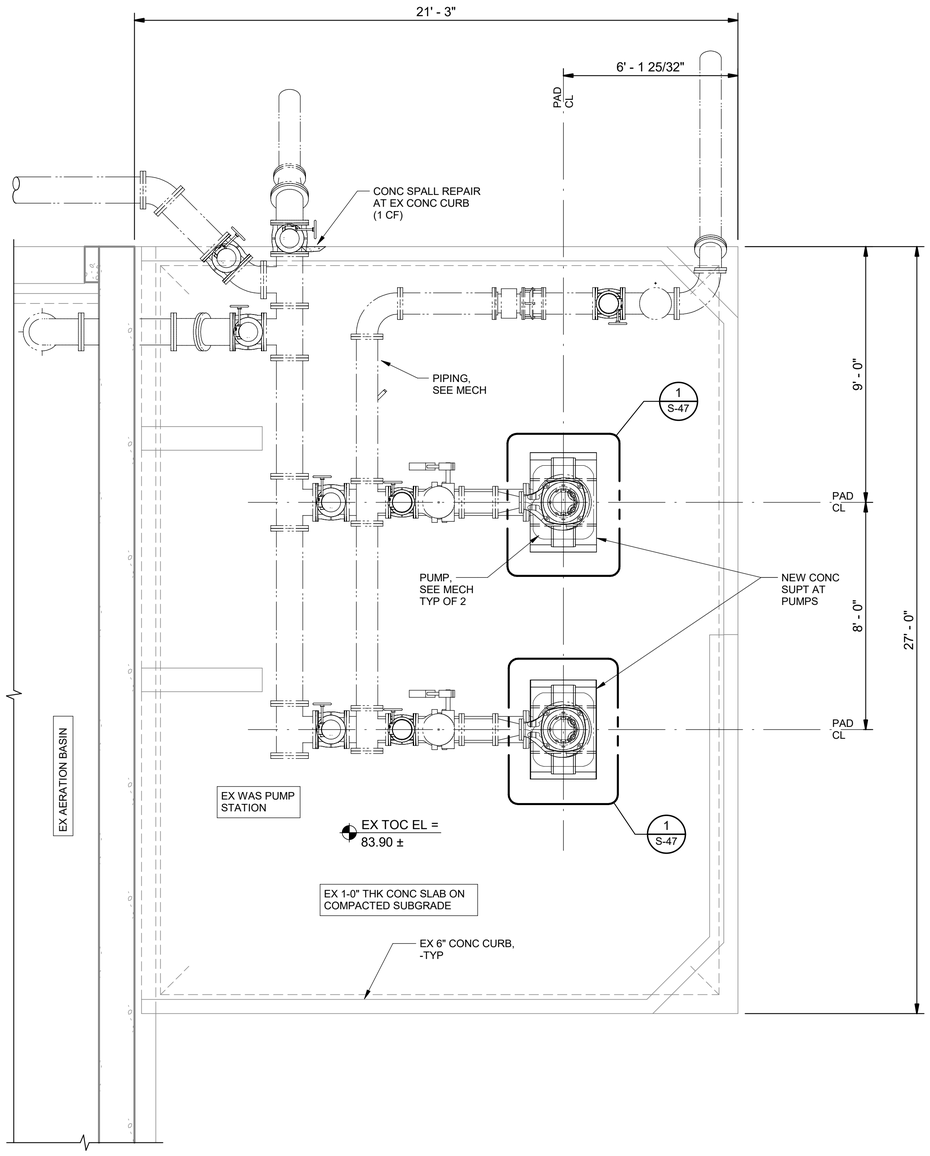

WAS PUMP STATION PLAN

SCALE: 3/8" = 1'-0"

NO.	DATE	REVISION	APP.

JQ-IMEG
100 GLASS STREET
SUITE 202
DALLAS, TX 75207
P: 972.392.7340
TBPELS FIRM F-26651

PROJECT NUMBER : 26021466.00

JQ-IMEG RESERVES PROPRIETARY RIGHTS, INCLUDING COPYRIGHTS, TO THIS DRAWING AND THE DATA SHOWN THEREON. SAID DRAWING AND/OR DATA ARE THE EXCLUSIVE PROPERTY OF JQ-IMEG AND SHALL NOT BE USED OR REPRODUCED FOR ANY OTHER PROJECT WITHOUT THE EXPRESS WRITTEN APPROVAL AND PARTICIPATION OF JQ-IMEG. ©2026 JQ-IMEG LLC

MBROH ENGINEERING
11757 KATY FWY,
SUITE 625
HOUSTON, TX 77077
713-468-2545

INTERIM REVIEW DOCUMENTS

NOT INTENDED FOR BIDDING, PERMIT OR CONSTRUCTION PURPOSES)

JOHN D. MISCHKOT
TEXAS REGISTRATION No: 107566
DATE: 11/02/2026

SURVEYED BY:

FB NO.

CITY OF HOUSTON
HOUSTON PUBLIC WORKS

WHITE OAKS WWTP IMPROVEMENTS

STRUCTURAL

WAS PUMP STATION MODIFICATION PLAN

WBS NUMBER	FOR CITY OF HOUSTON USE ONLY
R-000265-0158-3	
DRAWING SCALE	
As indicated	
CITY OF HOUSTON, PM	
SHAHIDUR RAHMAN, PE	
SHEET NO. 82 OF 189	

S-46

Autodesk Docs://White Oaks Wastewater Treatment Plant Improvements/25004152.01_CoH WHITE OAK_Improvements_Ex AB_R25.rvt

11/3/2026 4:56:22 PM

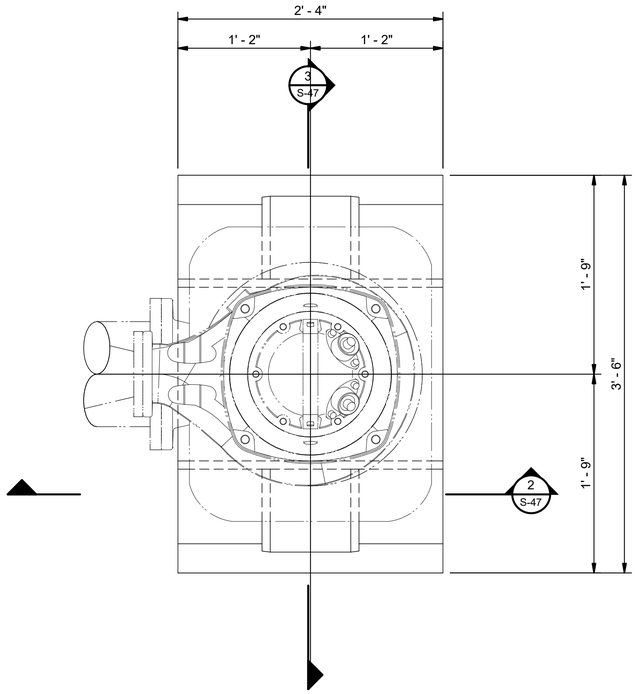

WAS PUMP PAD PLAN

SCALE: 1 1/2" = 1'-0"

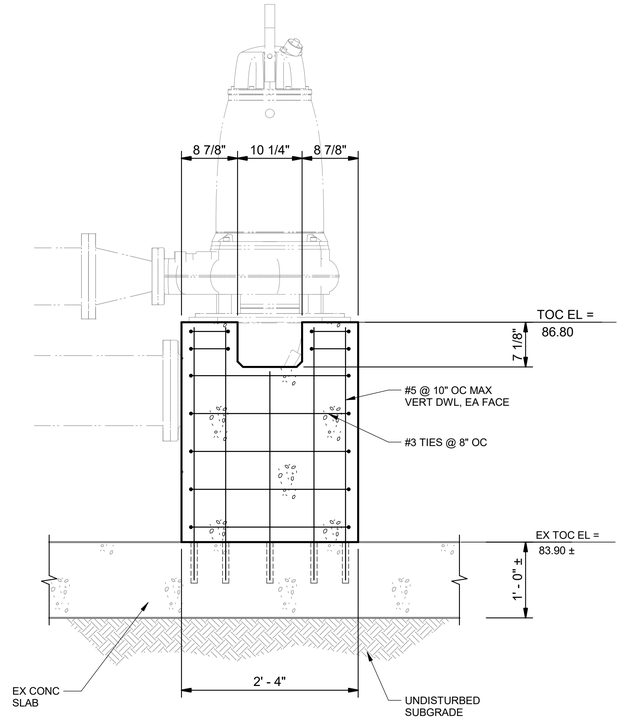

WAS PUMP PAD

SECTION 2 S-47

SCALE: 1" = 1'-0"

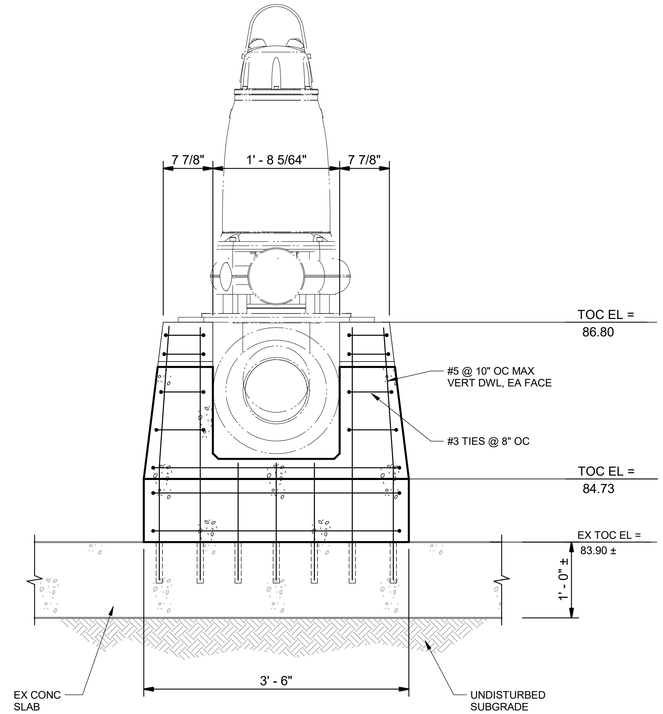

WAS PUMP PAD

SECTION 3 S-47

SCALE: 1" = 1'-0"

NO.	DATE	REVISION	APP.

JQ-IMEG
100 GLASS STREET
SUITE 202
DALLAS, TX 75207
P: 972.392.7340
TBPELS FIRM F-26651

PROJECT NUMBER : 26021466.00

JQ-IMEG RESERVES PROPRIETARY RIGHTS, INCLUDING COPYRIGHTS, TO THIS DRAWING AND THE DATA SHOWN THEREON. SAID DRAWING AND/OR DATA ARE THE EXCLUSIVE PROPERTY OF JQ-IMEG AND SHALL NOT BE USED OR REPRODUCED FOR ANY OTHER PROJECT WITHOUT THE EXPRESS WRITTEN APPROVAL AND PARTICIPATION OF JQ-IMEG. ©2026 JQ-IMEG LLC

MBROH ENGINEERING
11757 KATY FWY,
SUITE 625
HOUSTON, TX 77077
713-468-2545

SURVEYED BY:

FB NO.

INTERIM REVIEW DOCUMENTS

(NOT INTENDED FOR BIDDING, PERMIT OR CONSTRUCTION PURPOSES)

JOHN D. MISCHKOT
TEXAS REGISTRATION No: 107566
DATE: 11/02/2026

CITY OF HOUSTON
HOUSTON PUBLIC WORKS

WHITE OAKS
WWTP IMPROVEMENTS

STRUCTURAL

WAS PUMP STATION SECTIONS AND DETAILS I

WBS NUMBER	FOR CITY OF HOUSTON USE ONLY
R-000265-0158-3	
DRAWING SCALE	
As indicated	
CITY OF HOUSTON, PM	
SHAHIDUR RAHMAN, PE	

S-47 SHEET NO. 83 OF 189

Autodesk Docs://White Oaks Wastewater Treatment Plant Improvements/250044152.01_CoH WHITE OAK_Improvements_ExAB_R25.rvt

11/3/2026 4:56:23 PM

SHEET INTENTIONALLY LEFT BLANK

NO.	DATE	REVISION	APP.

JQ-IMEG
100 GLASS STREET
SUITE 202
DALLAS, TX 75207
P: 972.392.7340
TBPELS FIRM F-26651

PROJECT NUMBER : 26021466.00

JQ-IMEG RESERVES ITS PROPRIETARY RIGHTS, INCLUDING COPYRIGHTS, TO THIS DRAWING AND ITS ELECTRONIC FILES. SAID DRAWING AND FILES ARE THE EXCLUSIVE PROPERTY OF JQ-IMEG AND SHALL NOT BE USED OR REPRODUCED FOR ANY OTHER PROJECT WITHOUT THE EXPRESS WRITTEN APPROVAL AND PARTICIPATION OF JQ-IMEG. ©2026 JQ-IMEG LLC

MBROH ENGINEERING
11757 KATY FWY,
SUITE 625
HOUSTON, TX 77077
713-468-2545

INTERIM REVIEW DOCUMENTS
(NOT INTENDED FOR BIDDING, PERMIT OR CONSTRUCTION PURPOSES)
JOHN D. MISCHKOT
TEXAS REGISTRATION No: 107566
DATE: 11/03/2026

SURVEYED BY:
FB NO.

CITY OF HOUSTON
HOUSTON PUBLIC WORKS

WHITE OAKS
WWTP IMPROVEMENTS

STRUCTURAL
WAS PUMP STATION SECTIONS AND DETAILS II

WBS NUMBER	FOR CITY OF HOUSTON USE ONLY
R-000265-0158-3	
DRAWING SCALE	
CITY OF HOUSTON, PM	
SHAHIDUR RAHMAN, PE	
SHEET NO. 84 OF 189	

S-48

Autodesk Docs://White Oaks Wastewater Treatment Plant Improvements/25004152.01_CoH WHITE OAK_Improvements_Ex AB_R25.rvt

11/1/2026 10:56:56 PM

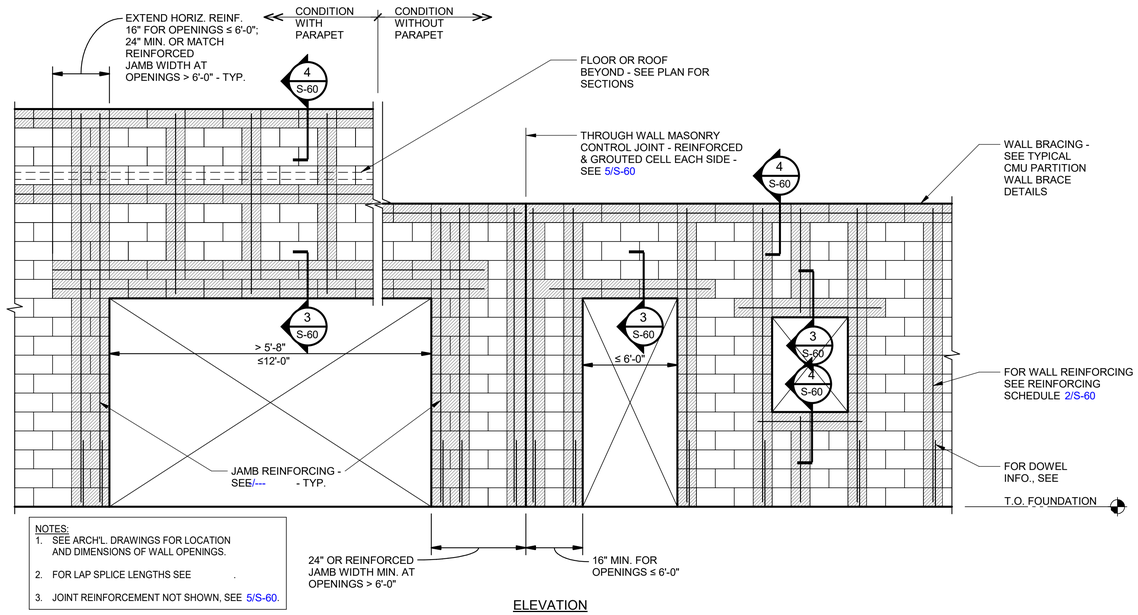

NOTES:
1. SEE ARCH'L. DRAWINGS FOR LOCATION AND DIMENSIONS OF WALL OPENINGS.
2. FOR LAP SPLICE LENGTHS SEE .
3. JOINT REINFORCEMENT NOT SHOWN, SEE 5/S-60.

ELEVATION

TYPICAL CMU WALL REINFORCING DETAIL

DETAIL 1
SCALE: NTS

CMU WALL REINFORCING SCHEDULE				
WALL TYPE	WALL THICKNESS (IN.) (NOM.)	LOCATION	REINF.	REMARKS
EXTERIOR	8	BLOWER BUILDING	#7 @ 24"OC	-
INTERIOR	8	BLOWER BUILDING	#5 @ 36"OC	-
EXTERIOR	8	ANALYZER BUILDING	#5 @ 24"OC	-
INTERIOR	8	ANALYZER BUILDING	#5 @ 48"OC	-

CMU WALL REINFORCING SCHEDULE

DETAIL 2
SCALE: NTS

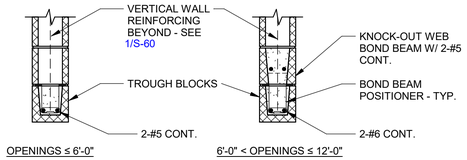

NOTES:
1. LINTELS SHALL REMAIN SHORED UNTIL MASONRY CONSTRUCTION ABOVE HAS CURED FOR A MINIMUM OF 14 DAYS.
2. SEE ARCHITECTURAL DRAWINGS FOR OPENING SIZE AND LOCATION.
3. VERTICAL CONTROL JOINTS SHALL NOT CROSS LINTEL REINFORCING.

TYPICAL CMU LINTEL DETAIL

DETAIL 3 S-60
SCALE: NTS

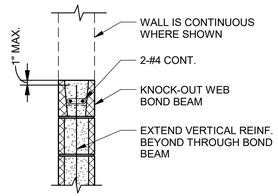

TYPICAL CMU BOND BEAM DETAIL

DETAIL 4 S-60
SCALE: NTS

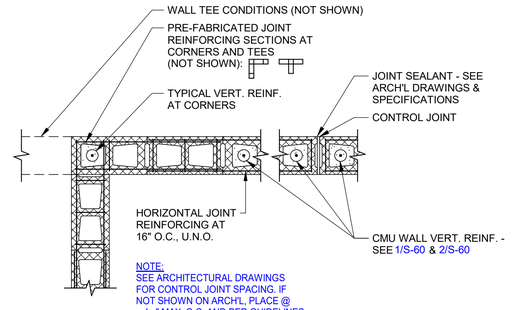

NOTE:
SEE ARCHITECTURAL DRAWINGS FOR CONTROL JOINT SPACING. IF NOT SHOWN ON ARCH'L, PLACE @ __'-__" MAX. O.C. AND PER GUIDELINES ON 1/S-60. LOCATE A MAXIMUM OF 1/2 TYP. CONTROL SPA. FROM CORNERS.

PLAN

TYPICAL CMU BAR PLACEMENT DETAIL

DETAIL 5
SCALE: NTS

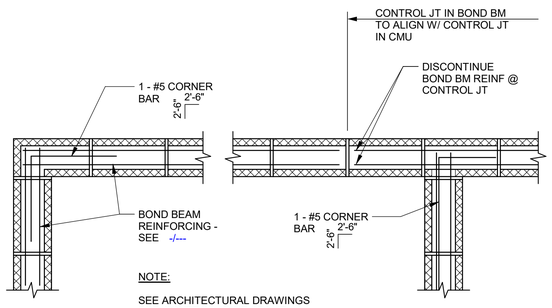

NOTE:

SEE ARCHITECTURAL DRAWINGS FOR CONTROL JOINT SPA. IF NOT SHOWN ON ARCH'L, PLACE @ 24'-0" MAX OC AND PER GUIDELINES ON -/--- LOC A MAX OF 1/2 TYP CONTROL SPA FROM CORNERS.

TYPICAL CORNER BARS AT BOND BEAMS DETAIL

DETAIL 6
SCALE: NTS

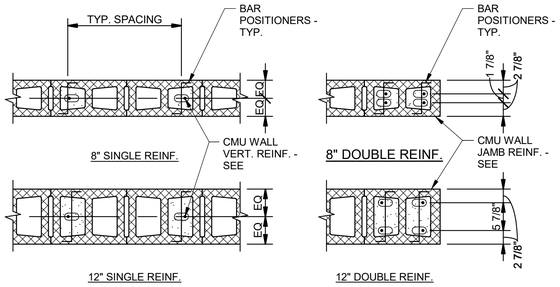

NOTES:
1. PROVIDE BAR POSITIONERS AT TOP AND BOTTOM OF LAP SPLICES AND AT 48" O.C. MAX. VERTICALLY.
2. HORIZONTAL JOINT REINFORCEMENT NOT SHOWN FOR CLARITY - SEE

TYPICAL CMU BAR PLACEMENT DETAIL

DETAIL 7
SCALE: NTS

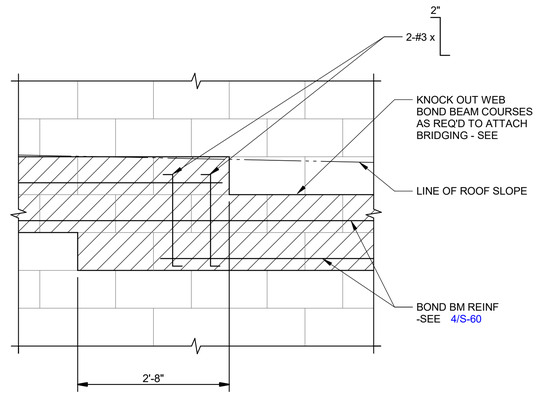

ELEVATION

TYPICAL STEP IN BOND BEAM DETAIL

DETAIL 8
SCALE: NTS

NO.	DATE	REVISION	APP.

JQ-IMEG
100 GLASS STREET
SUITE 202
DALLAS, TX 75207
P: 972.392.7340
TBPELS FIRM F-26651
PROJECT NUMBER : 26021466.00
JQ-IMEG RESERVES PROPRIETARY RIGHTS, INCLUDING COPYRIGHTS, TO THIS DRAWING AND THE DATA SHOWN THEREON. SAID DRAWING AND/OR DATA ARE THE PROPERTY OF JQ-IMEG AND SHALL NOT BE USED OR REPRODUCED FOR ANY OTHER PROJECT WITHOUT THE EXPRESSED WRITTEN APPROVAL AND PARTICIPATION OF JQ-IMEG. ©2026 JQ-IMEG LLC

MBROH ENGINEERING
11757 KATY FWY,
SUITE 625
HOUSTON, TX 77077
713-468-2545

SURVEYED BY:

FB NO.

INTERIM REVIEW DOCUMENTS
(NOT INTENDED FOR BIDDING, PERMIT OR CONSTRUCTION PURPOSES)

JOHN D. MISCHKOT
TEXAS REGISTRATION No: 107566
DATE: 11/02/2026

CITY OF HOUSTON
HOUSTON PUBLIC WORKS

WHITE OAKS WWTP IMPROVEMENTS

STRUCTURAL

TYPICAL STRUCTURAL DETAILS I

WBS NUMBER	FOR CITY OF HOUSTON USE ONLY
R-000265-0158-3	
DRAWING SCALE	
NTS	
CITY OF HOUSTON, PM	
SHAHIDUR RAHMAN, PE	
S-60	SHEET NO. 85 OF 189

Autodesk Docs://White Oaks Wastewater Treatment Plant Improvements/25004152.01_CoH WHITE OAK Improvements_Ex AB_R25.rvt

11/1/2026 10:56:58 PM

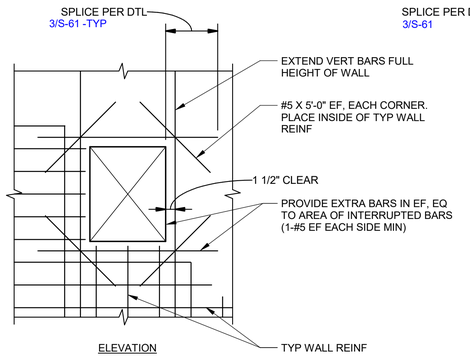

ELEVATION

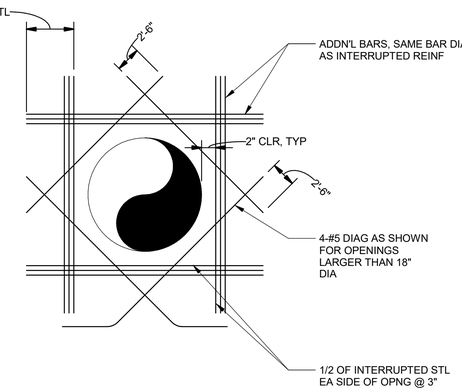

NOTES:

1. TYP FOR ALL OPNGS IN CONC WALLS AND SLABS UNO ON PLANS.
2. DO NOT WELD REINF TO PIPE SLEEVES AND INSERTS.
3. FOR OPNGS LARGER THAN 4'-0", REINF SAME AS FOR 4'-0" OPNGS.
4. SPA @ 3 BAR DIAMETERS (OR 3" MIN) OC.
5. SPLICE PER TENSION LAP SPLICE DTL 3/S-61
6. INCREASE SIZE OF ADDN'L BARS TO PROVIDE EQ AREA AS NEEDED TO FIT WITHIN A DISTANCE OF 2 X WALL/SLAB THICKNESS FROM OPNG. PROVIDE 2" MIN CLR BTWN BARS.
7. WHERE A SLAB OR INTERSECTING WALL CONNECTS WITHIN ONE WALL THICKNESS OF THE OPNGS ADDN'L BARS ON THAT SIDE MAY BE OMITTED.

TYPICAL WALL AND SLAB OPENING REINFORCING

DETAIL 1
SCALE: NTS

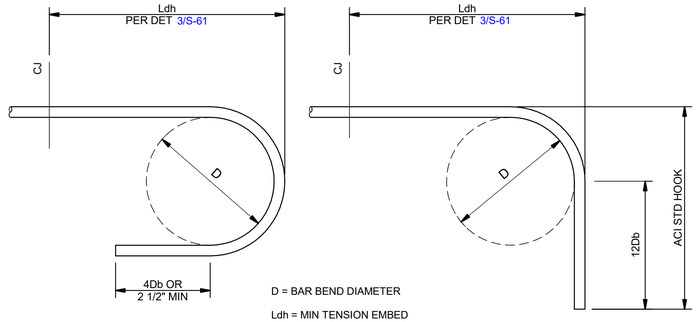

D = BAR BEND DIAMETER

Ldh = MIN TENSION EMBED LENGTHS

Db = BAR DIA

D=6 Db #3 THROUGH #8

D=8 Db #9, #10, AND #11

D=10 Db #14 AND 18

TYPICAL HOOKED BAR

DETAIL 2
SCALE: NTS

BAR SIZE	MIN EMBEDMENT LENGTH		MIN LAP SPLICE LENGTHS		TENSION EMBEDMENT LENGTHS Ldh FOR STANDARD END HOOK (INCHES)
	** TOP BARS (INCHES)	OTHER BARS (INCHES)	* TOP BARS (INCHES)	OTHER BARS (INCHES)	
#3	14	12	18	16	7
#4	18	15	25	20	8
#5	23	18	32	24	12
#6	28	22	40	31	14
#7	40	29	54	42	16
#8	46	33	63	45	18
#9	57	41	76	54	20
#10	70	49	84	66	24
#11	84	60	109	78	26
#14	115	81	SEE NOTE 4		32

FOOTNOTES:

1. TOP BARS ARE HORIZ BARS SO THAT MORE THAN 12" OF CONC IS CAST IN THE MEMBER BELOW THE BAR. HORIZ BARS IN WALLS ARE TO BE PROVIDED WITH LAPS AS REQ'D FOR TOP BARS.
2. EXCEPT AS OTHERWISE INDICATED ON THE DWGS, TENSION LAP SPLICE LENGTHS AND TENSION EMBEDMENT LENGTHS LDH FOR STANDARD AND END HOOKS SHALL BE NO LESS THAN (NO MINUS TOLERANCE) SHOWN ON THIS SHEET.
3. LAP SPLICES SHALL NOT BE MADE AT POINTS OF MAX STRESS AS DETERMINED BY THE ENGR AND SHALL NOT BE SPACED CLOSER THAN 6" OC.
4. ONLY MECH SPLICES ARE ACCEPTABLE FOR #14 BARS. MECH SPLICE SHALL DEVELOP AT LEAST 125 PERCENT OF SPEC'D YIELD STRENGTH OF BAR. WHERE #14 BAR IS SPLICED WITH # 11 BAR OR SMALLER. PROVIDE SPLICE LENGTH SPEC'D FOR SMALLER BAR.
5. FOR EPOXY COATED BARS AN ADDN'L INCREASE TO THE EMBEDMENT AND SPLICE LENGTH WILL BE ADDED TO THE ABOVE TABLE OR REQ'D LENGTH AS DETERMINED BY ABV ITEMS 1, 2, AND 3. LENGTH OF EMBEDMENT OR SPLICE SHALL BE INCREASED BY MULTIPLYING THE APPROPRIATE LENGTH BY 1.5.
6. FOR COVERS LESS THAN 2" INCREASE TABULATED DIMENSIONS BY 100%.

TYPICAL TENSION LAP SPLICE AND EMBEDMENT LENGTH

DETAIL 3
SCALE: NTS

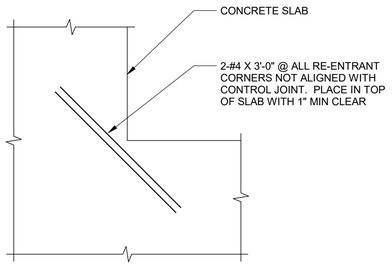

PLAN

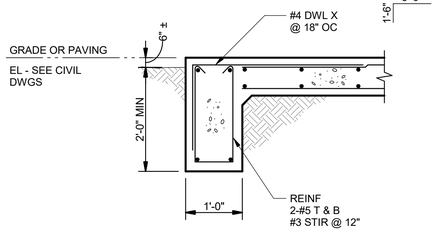

SECTION "A"

TYPICAL CORNER REINFORCING

DETAIL 4
SCALE: NTS

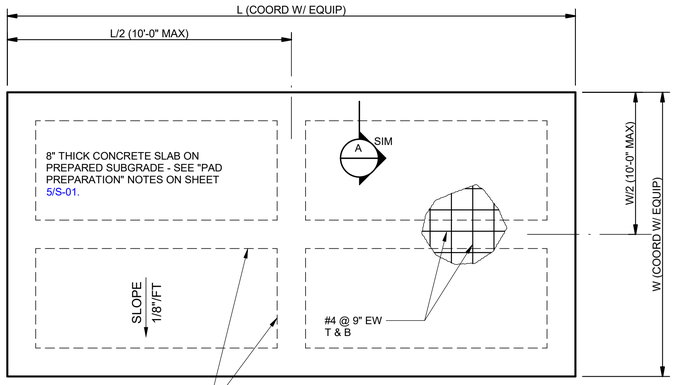

NOTES:

1. THIS DTL APPLIES AT THE FOLLOWING UNO IN THE DRAWINGS:
   A. SITE ELECTRICAL EQUIP PADS
   B. SITE MECH EQUIP PADS
2. REFER TO ELEC/MECH DWGS FOR EXACT SITE LOCATIONS OF PADS.
3. COORD W/ EQUIP MFR FOR ANY OPNGS AND PENETRATIONS REQ'D IN SITE PADS.

TYPICAL MECHANICAL OR ELECTRICAL YARD PAD

DETAIL 5
SCALE: NTS

NO.	DATE	REVISION	APP.

JQ-IMEG
100 GLASS STREET
SUITE 202
DALLAS, TX 75207
P: 972.392.7340
TBPELS FIRM F-26651

PROJECT NUMBER : 26021466.00

JQ-IMEG RESERVES PROPRIETARY RIGHTS, INCLUDING COPYRIGHTS, TO THIS DRAWING AND THE DATA SHOWN THEREON. SAID DRAWING AND/OR DATA ARE THE EXCLUSIVE PROPERTY OF JQ-IMEG AND SHALL NOT BE USED OR REPRODUCED FOR ANY OTHER PROJECT WITHOUT THE EXPRESSED, WRITTEN APPROVAL AND PARTICIPATION OF JQ-IMEG. ©2026 JQ-IMEG LLC

MBROH ENGINEERING 20
11757 KATY FWY,
SUITE 625
HOUSTON, TX 77077
713-468-2545

INTERIM REVIEW DOCUMENTS
(NOT INTENDED FOR BIDDING, PERMIT OR CONSTRUCTION PURPOSES)

JOHN D. MISCHKOT
TEXAS REGISTRATION No: 107566
DATE: 11/02/2026

SURVEYED BY:

FB NO.

CITY OF HOUSTON
HOUSTON PUBLIC WORKS

WHITE OAKS WWTP IMPROVEMENTS

STRUCTURAL

TYPICAL STRUCTURAL DETAILS II

WBS NUMBER	FOR CITY OF HOUSTON USE ONLY
R-000265-0158-3	
DRAWING SCALE	
NTS	
CITY OF HOUSTON, PM	
SHAHIDUR RAHMAN, PE	

S-61 SHEET NO. 86 OF 189

Autodesk Docs://White Oaks Wastewater Treatment Plant Improvements/25004152.01_CoH WHITE OAK Improvements_Ex AB_R25.rvt

11/1/2026 10:56:59 PM

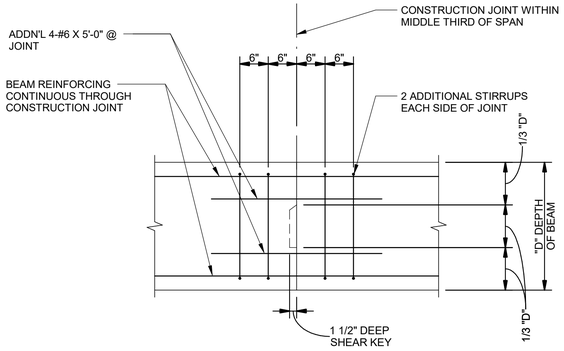

ELEVATION

NOTE:

1. THIS DETAIL APPLIES TO BEAMS ≤ 4'-0" DEPTH.

KEY WIDTH	
GR BM WIDTH "T"	W
< 12"	3 1/2"
12" TO 16"	5 1/2"
16" TO 20"	7 1/4"
20" TO 24"	9 1/4"
24" TO 30"	11 1/4"

TYPICAL GRADEBEAM CONSTRUCTION JOINT

DETAIL 1
SCALE: NTS

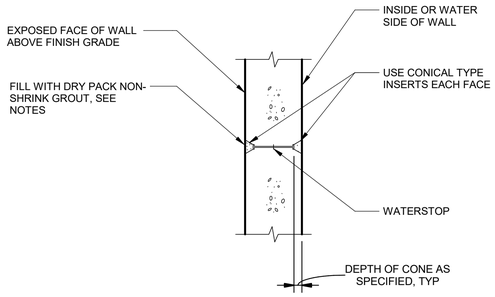

NOTES:

1. THE SPACING OF FORM TIES ON EXPOSED PORTIONS OF WALLS SHALL BE APPROXIMATELY EQUAL HORIZONTALLY AND VERTICALLY AND SHALL BE UNIFORM IN EACH DIRECTION.
2. DRY PACK METHOD SHALL BE AS SPECIFIED USING STEEL TOOLS.

TYPICAL FORM SNAP-TIE HOLE

DETAIL 2
SCALE: NTS

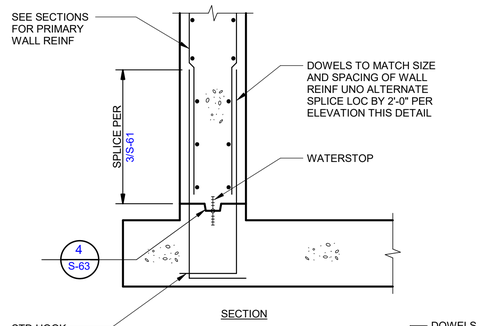

ELEVATION

TYPICAL WALL DOWEL

DETAIL 3
SCALE: NTS

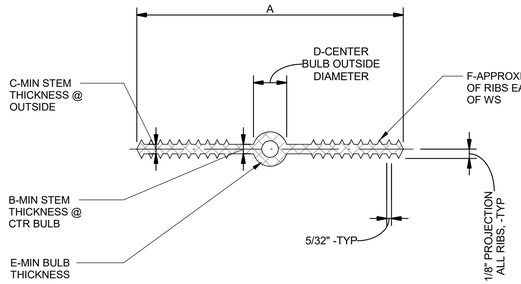

SIZE	A	B	C	D	E	F
6"X3/8"	6"	3/8"	3/8"	7/8"	1/4"	6
9"X3/8"	9"	3/8"	3/8"	1"	1/4"	8

NOTES:

1. MATERIAL QUALITY PER SPECIFICATIONS SECTION 03251.
2. DIM REQUIREMENTS INDICATED SHOULD BE GIVEN TO SUPPLIERS PRIOR TO PLACING ORDERS.
3. NON-ROUND CENTER BULBS SHALL HAVE A MIN OUTSIDE DIM OF "D".
4. SPLICING AT CORNERS AND INTERSECTIONS SHALL BE MADE PER MANUFACTURER RECOMMENDATIONS TO PROVIDE CONTINUOUS WATERTIGHT SEAL.
5. WHERE WATERSTOP IS PLACED ACROSS AN EXPANSION JOINT, WATERSTOP SHALL BE PROVIDED WITH CENTER BULB CAPABLE OF MOVING WITH THE EXPANSION JOINT MOVEMENT.
6. 6" WATERSTOPS SHALL BE USED IN TYPICAL CONDITIONS UNLESS NOTED OTHERWISE. 9" WATERSTOPS SHALL BE USED AT EXPANSION JOINTS IN WALLS AND SLABS.

TYPICAL WATERSTOP

DETAIL 4
SCALE: NTS

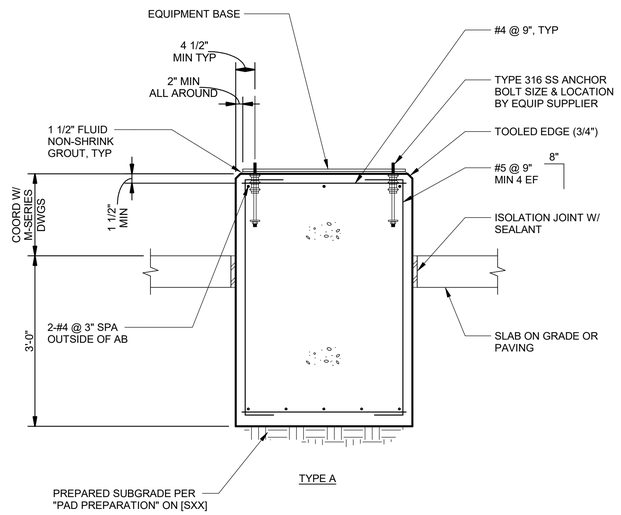

TYPE A

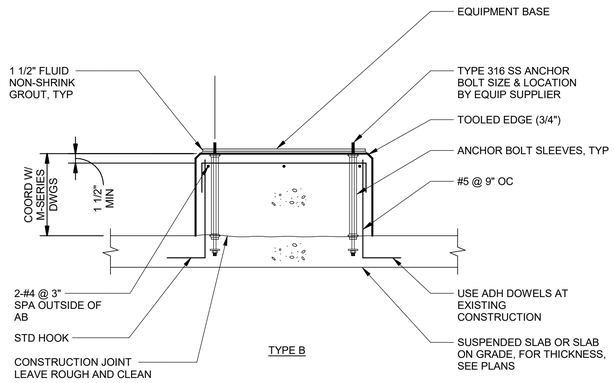

TYPE B

TYPICAL EQUIPMENT PAD

DETAIL 5
SCALE: NTS

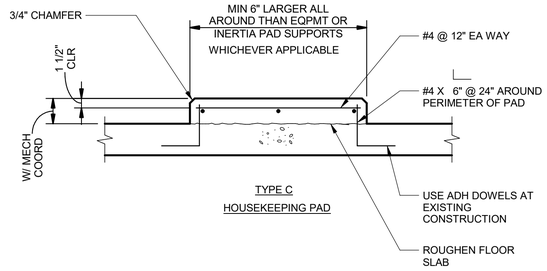

TYPE C
HOUSEKEEPING PAD

JQ-IMEG
100 GLASS STREET
SUITE 202
DALLAS, TX 75207
P: 972.392.7340
TBPELS FIRM F-26651
PROJECT NUMBER : 26021466.00
JQ-IMEG RESERVES PROPRIETARY RIGHTS, INCLUDING COPYRIGHTS, TO THIS DRAWING AND THE DATA SHOWN THEREON. SAID DRAWING AND/OR DATA ARE THE PROPERTY OF JQ-IMEG AND SHALL NOT BE USED OR REPRODUCED FOR ANY OTHER PROJECT WITHOUT THE EXPRESS WRITTEN APPROVAL AND PARTICIPATION OF JQ-IMEG. ©2026 JQ-IMEG LLC

MBROH ENGINEERING
11757 KATY FWY,
SUITE 625
HOUSTON, TX 77077
713-468-2545

SURVEYED BY:

FB NO.

INTERIM REVIEW DOCUMENTS
(NOT INTENDED FOR BIDDING, PERMIT OR CONSTRUCTION PURPOSES)

JOHN D. MISCHKOT
TEXAS REGISTRATION No: 107566
DATE: 11/02/2026

CITY OF HOUSTON
HOUSTON PUBLIC WORKS

WHITE OAKS WWTP IMPROVEMENTS

STRUCTURAL

TYPICAL STRUCTURAL DETAILS III

WBS NUMBER	FOR CITY OF HOUSTON USE ONLY
R-000265-0158-3	
DRAWING SCALE	
NTS	
CITY OF HOUSTON, PM	
SHAHIDUR RAHMAN, PE	
S-62	SHEET NO. 87 OF 189

NO.	DATE	REVISION	APP.

Autodesk Docs://White Oaks Wastewater Treatment Plant Improvements/25004152.01_CoH WHITE OAK_Improvements_Ex AB_R25.rvt

11/1/2026 10:57:00 PM

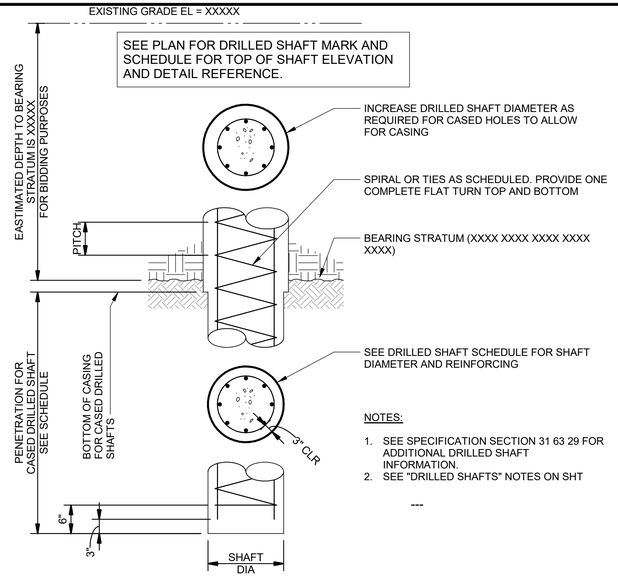

ELEVATION

NOTES:

1. SEE SPECIFICATION SECTION 31 63 29 FOR ADDITIONAL DRILLED SHAFT INFORMATION.
2. SEE "DRILLED SHAFTS" NOTES ON SHT

NOTE:
ROUND TIES THUS: (1) MAY BE USED IN LIEU OF SPIRALS. BAR SIZE WILL REMAIN THE SAME SPACING OF TIES SHALL BE 12" OC.

DRILLED SHAFT TYPE SCHEDULE

TYPE	DRILLED SHAFT DIA (INCHES)	VERTICAL BARS	SPIRALS	PENETRATION (SEE NOTE 2) (FT)
P1	24	(8)-#8	#3@12	15
P2	24	(8)-#8	#3@12	20
P3	24	(16)-#8	#3@12	35
P4	36	(14)-#10	#4@12	30
P5	36	(14)-#10	#4@12	35
P6	36	(14)-#10	#4@12	45
P7	36	(14)-#10	#4@12	20

TYPICAL DRILLED SHAFTS

DETAIL 1
SCALE: NTS

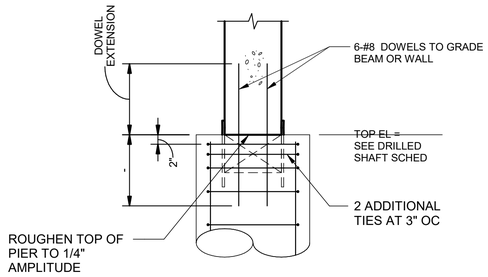

WHERE DEPTH OF BEAM OR WALL ALLOWS, PROVIDE STRAIGHT DOWELS WITH DOWEL EXTENSION EQUAL TO MIN LAP SPLICE LENGTH FROM TABLE 3/S-61 , OTHERWISE PROVIDE HOOKED DOWELS WITH DOWEL EXTENSION EQUAL TO TENSION EMBEDMENT LENGTH LDH FROM TABLE 3/S-61.

TYPICAL PIER TO WALL DOWEL

DETAIL 2
SCALE: NTS

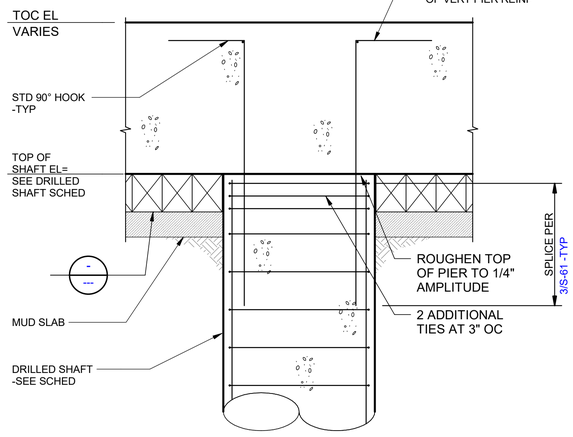

TYPICAL DRILLED SHAFT AT MAT SLAB

DETAIL 3
SCALE: NTS

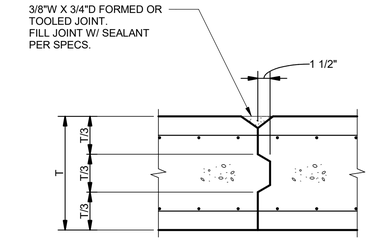

SLABS (VERT)

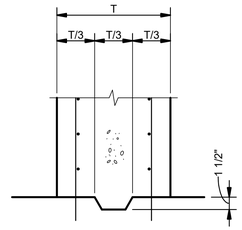

BASE OF WALLS (HORIZ)

JOINTS WITHOUT WATERSTOPS

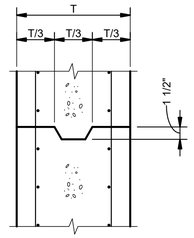

WALLS (HORIZ & VERT)

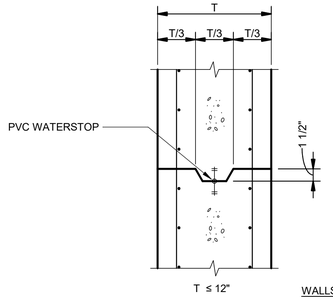

T ≤ 12"

WALLS (HORIZ & VERT)

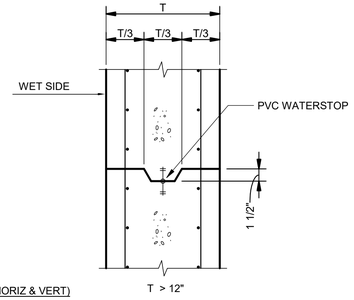

T > 12"

NOTES:

1. REINFORCING STEEL IS TO BE CONTINUOUS ACROSS ALL CONSTRUCTION JOINTS. ALL WATERSTOPS SHALL BE AS INDICATED ON STRUCTURAL DRAWINGS. MATERIALS AS DESCRIBED IN SPECIFICATIONS.
2. WATERSTOPS SHALL BE 6" PVC WS UNO.

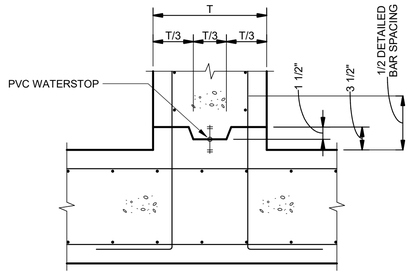

BASE OF WALLS (HORIZ)

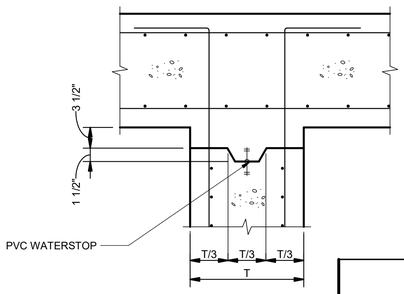

WALLS TO SOFFIT (HORIZ)

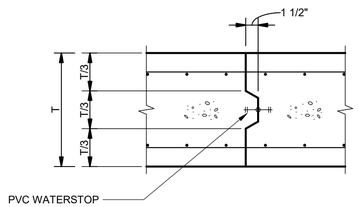

T ≤ 12"

SLABS (VERT)
WATERTIGHT JOINTS

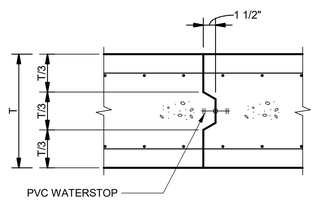

T > 12"

TYPICAL CONSTRUCTION JOINTS

DETAIL 4
SCALE: NTS

NO.	DATE	REVISION	APP.

JQ-IMEG 100 GLASS STREET SUITE 202 DALLAS, TX 75207 P: 972.392.7340 TBPELS FIRM F-26651
PROJECT NUMBER : 26021466.00
JQ-IMEG RESERVES PROPRIETARY RIGHTS, INCLUDING COPYRIGHTS, TO THIS DRAWING AND THE DATA SHOWN THEREON. SAID DRAWING AND/OR DATA ARE THE EXCLUSIVE PROPERTY OF JQ-IMEG AND SHALL NOT BE USED OR REPRODUCED FOR ANY OTHER PROJECT WITHOUT THE EXPRESS WRITTEN APPROVAL AND PARTICIPATION OF JQ-IMEG. ©2026 JQ-IMEG LLC

MBROH ENGINEERING
11757 KATY FWY,
SUITE 625
HOUSTON, TX 77077
713-468-2545

INTERIM REVIEW DOCUMENTS
(NOT INTENDED FOR BIDDING, PERMIT OR CONSTRUCTION PURPOSES)
JOHN D. MISCHKOT
TEXAS REGISTRATION No: 107566
DATE: 11/02/2026

SURVEYED BY:
FB NO.

CITY OF HOUSTON
HOUSTON PUBLIC WORKS

WHITE OAKS WWTP IMPROVEMENTS

STRUCTURAL

TYPICAL STRUCTURAL DETAILS IV

WBS NUMBER	FOR CITY OF HOUSTON USE ONLY
R-000265-0158-3	
DRAWING SCALE	
As indicated	
CITY OF HOUSTON, PM	
SHAHIDUR RAHMAN, PE	

S-63

SHEET NO. 88 OF 189

Autodesk Docs://White Oaks Wastewater Treatment Plant Improvements/25004152.01_COH WHITE OAK_Improvements_Ex AB_R25.rvt

11/1/2026 10:57:01 PM

NOTES:

1. WHERE 90 DEGREE HOOKS ARE SCHEDULED OR DETAILED FOR TOP BARS, CORNER BARS MAY BE OMITTED.
2. MATCH SIZE, LOCATION AND NUMBER OF HORIZONTAL BEAM AND WALL BARS, EXCEPT THAT WHERE THERE ARE MORE THAN 2 TOP OR BOTTOM BARS, ONLY THE INSIDE AND OUTSIDE BARS MUST BE MATCHED.

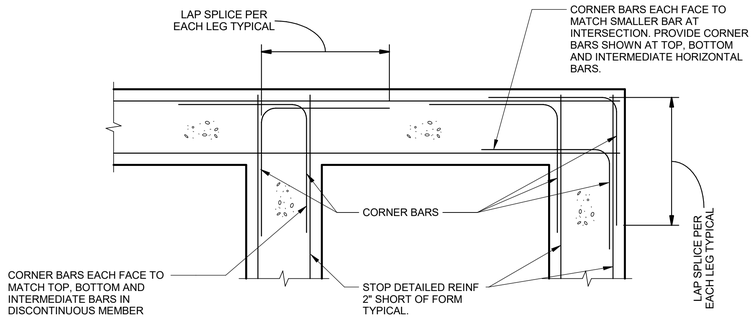

PLAN

TYPICAL CORNER BARS AT BEAM

DETAIL 1

SCALE: NTS

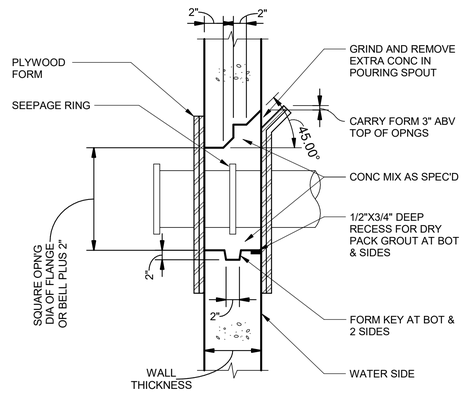

NOTES:

1. PIPE BLOCKOUT NOT TO BE USED WITHOUT PERMISSION OF ENGR UNO ON PLANS.
2. COAT CONC ENCASED PORTION OF PIPE PER MECH SPECS.

TYPICAL PIPE BLOCKOUT

DETAIL 2

SCALE: NTS

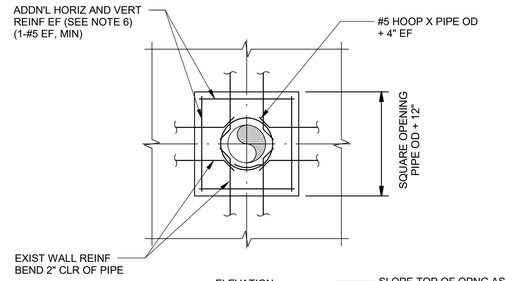

ELEVATION

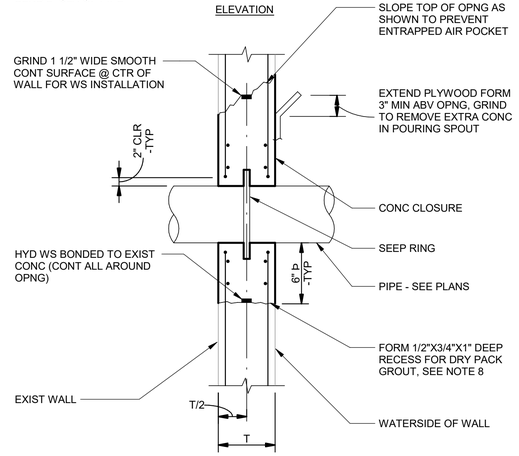

SECTION

TYPICAL PIPE PENETRATION - EXISTING WALL

DETAIL 3

SCALE: NTS

NOTES:

1. SAW-CUT 1" DEEP X PIPE OD + 12" SQUARE SCORE LINE ON EF OF WALL. (VERIFY DEPTH OF CUT TO CLR REINF.) INCREASE HT AS NOTED @ TOP ON WATERSIDE FACE FOR POURING.
2. CHIP TO REMOVE THE CONC WITHIN THE SCORE LINE, WHILE PRESERVING THE EXIST WALL REINF.
3. CUT EXIST REINF @ CENTER OF OPNG AND BEND TO CLR PIPE.
4. GRIND 1 1/2" WIDE X CONT. SMOOTH SURFACE ALL AROUND THE OPNG @ CENTER OF WALL. CLEAN SURFACES AND BOND CONT HYDROPHILIC WS IN PLACE.
5. INSTALL WALL PIPE. (COAT CONC ENCASED PORTION OF PIPE WITH SPEC'D COATING SYSTEM.)
6. INSTALL ADDN'L REINF EF, EACH SIDE, ABV AND BELOW PIPE. HORIZ REINF TO HAVE COMBINED AREA EQ TO AREA OF HORIZ REINF CUT. VERT REINF TO HAVE COMBINED AREA EQ TO AREA OF VERT REINF CUT.
7. SOAK CONC SURFACES AND WITHIN 15 MINUTES CAST CONC CLOSURE. (CONC CLOSURE MUST BE CAST BEFORE HYDROPHILIC WS EXPANDS.) FORM GROOVE ON ALL SIDES OF OPNG EXCEPT @ TOP ON THE POUR SIDE.
8. CLEAN SURFACES OF FORMED GROOVE WITH POWER WIRE BRUSH OR SANDBLASTING AND DRY-PACK WITH NON-SHRINK GROUT AFTER NEW CONC MIN. 28 DAYS OLD.

NO.	DATE	REVISION	APP.

NOTE:
SIMILAR TO 3/S-64
EXCEPT AS NOTED

ELEVATION

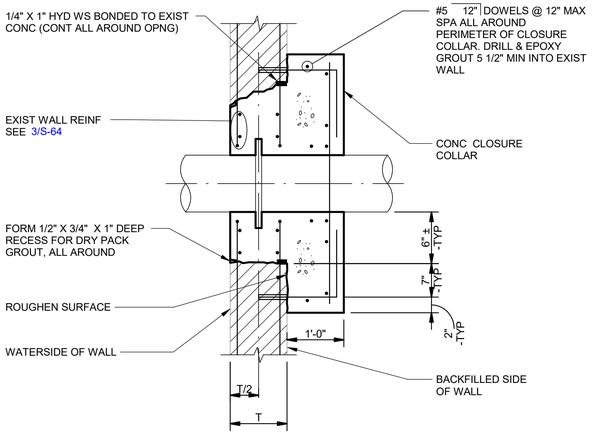

SECTION

TYPICAL PIPE PENETRATION - EXISTING WALL

DETAIL 4

SCALE: NTS

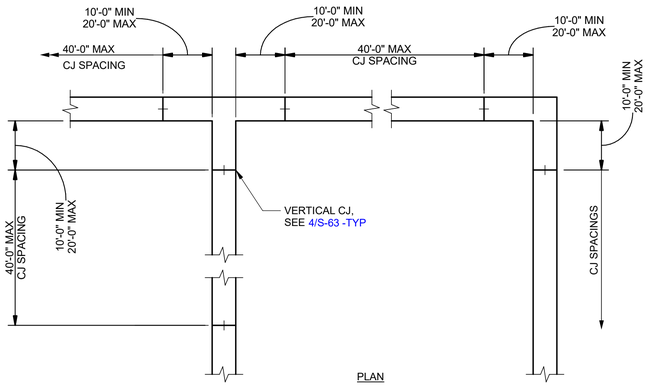

PLAN

NOTES:

1. COORDINATE CJ LOCS AND TIME BETWEEN CONC POURS WITH SPEC 3300.
2. LOCATE WALL CJ AS SHOWN, UNO.

TYPICAL JOINT SPACING

DETAIL 5

SCALE: NTS

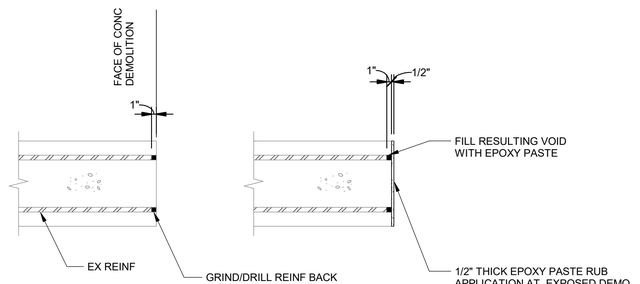

TYPICAL CONCRETE DEMOLITION REPAIR

DETAIL 6

SCALE: NTS

JQ-IMEG
100 GLASS STREET
SUITE 202
DALLAS, TX 75207
P: 972.392.7340
TBPELS FIRM F-26651
PROJECT NUMBER : 26021466.00

JQ-IMEG RESERVES PROPRIETARY RIGHTS, INCLUDING COPYRIGHTS, TO THIS DRAWING AND THE DATA SHOWN THEREON. SAID DRAWING AND/OR DATA ARE THE EXCLUSIVE PROPERTY OF JQ-IMEG AND SHALL NOT BE USED OR REPRODUCED FOR ANY OTHER PROJECT WITHOUT THE EXPRESS WRITTEN APPROVAL AND PARTICIPATION OF JQ-IMEG. ©2026 JQ-IMEG LLC

MBROH ENGINEERING 20
11757 KATY FWY,
SUITE 625
HOUSTON, TX 77077
713-468-2545

SURVEYED BY:

FB NO.

INTERIM REVIEW DOCUMENTS
(NOT INTENDED FOR BIDDING, PERMIT OR CONSTRUCTION PURPOSES)

JOHN D. MISCHKOT
TEXAS REGISTRATION No: 107566
DATE: 11/02/2026

CITY OF HOUSTON
HOUSTON PUBLIC WORKS

WHITE OAKS WWTP IMPROVEMENTS

STRUCTURAL

TYPICAL STRUCTURAL DETAILS V

WBS NUMBER	FOR CITY OF HOUSTON USE ONLY
R-000265-0158-3	
DRAWING SCALE	
NTS	
CITY OF HOUSTON, PM	
SHAHIDUR RAHMAN, PE	

S-64

SHEET NO. 89 OF 189

Autodesk Docs://White Oaks Wastewater Treatment Plant Improvements/250044152.01_COH WHITE OAK_Improvements_EX AB_R25.rvt

11/1/2026 10:57:03 PM

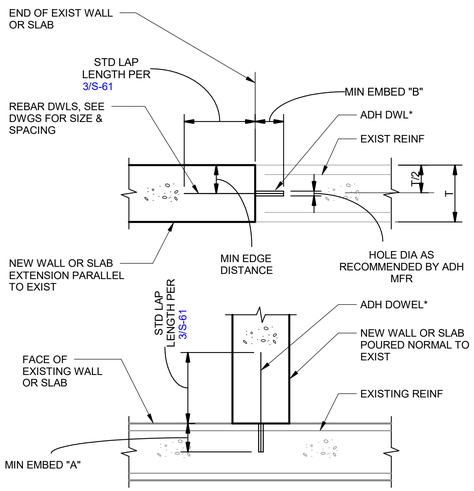

DOWEL SIZE	MIN EDGE DIST	MIN EMBEDMENT "A"	MIN EMBEDMENT "B"
#3	2"	3 1/2"	6"
#4	2 1/2"	5"	8"
#5	3"	6 1/2"	10"
#6	4"	9"	13"
#7	5"	10 1/2"	16"
#8	6"	12"	19"

NOTE:

1. CONFORM TO THE REQUIREMENTS OF SPECIFICATION SECTION 03200, CONCRETE REINFORCEMENT.
2. FOLLOW ADHESIVE MANUFACTURER'S INSTRUCTIONS FOR INSTALLATION.
3. USE MIN EMBEDMENTS SHOWN, EXCEPT USE MANUFACTURER'S MIN RECOMMENDED EMBEDMENT IF GREATER.
4. "*" LOCATE DOWELS CENTERED IN WALL OR SLAB UNLESS OTHERWISE NOTED ON DRAWINGS. WHERE 2 ROWS OF DOWELS INDICATED, STAGGER SPACING & LOCATE ALTERNATING DOWELS AT MINIMUM EDGE DISTANCE FROM OPPOSITE FACES.

TYPICAL ADHESIVE DOWELS

DETAIL 1
SCALE: NTS

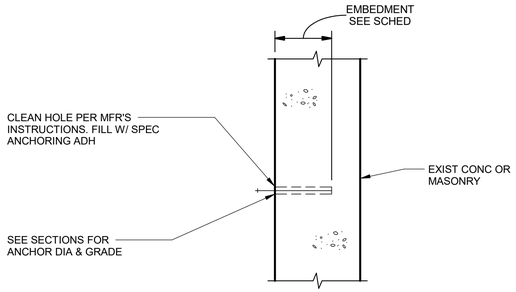

ADHESIVE ANCHOR NOTES

1. ADHESIVE ANCHORS SHALL BE ONE OF THE FOLLOWING:
   - HILTI "HIT HY 200" ADHESIVE
   - SIMPSON "ACRYLIC-TIE" ADHESIVE
2. LOCATE EXISTING REINFORCING STEEL IN THE CONCRETE USING NON-DESTRUCTIVE METHODS AND POSITION ANCHOR LOCATIONS TO AVOID CONFLICTS WITH EXISTING REINFORCING. ANCHOR LOCATIONS CAN BE ADJUSTED BY A MAXIMUM OF 1 1/2" FROM DETAILED LOCATIONS TO AVOID CONFLICTS, UNLESS NOTED OTHERWISE.
3. BASED ON FIELD VERIFIED LOCATIONS OF REINFORCING STEEL AND EMBEDDED ITEMS, THE CONTRACTOR SHALL CREATE TEMPLATES FOR EACH ANCHOR GROUP.
4. ALL DEBRIS SHALL BE BLOWN OUT OF THE HOLES WITH COMPRESSED AIR AFTER DRILLING. (NOT REQUIRED FOR "HIT-TZ" ANCHORS).
5. ALL ABANDONED HOLES SHALL BE FILLED WITH NONSHRINK GROUT.
6. HOLES IN CONNECTION PLATES SHALL BE NO MORE THAN 1/16" LARGER THAN THE ANCHOR DIAMETER. IF LARGER HOLES ARE REQUIRED FOR ERECTION PURPOSES, PROVIDE 1/4" X 3" X 3" PLATE WASHERS CONTINUOUSLY WELDED TO THE CONNECTION PLATE.

ANCHOR INSTALLATION INFORMATION			
ANCHOR DIAMETER	1/2"	5/8"	3/4"
HOLE DIAMETER	9/16"	11/16"	13/16"
EMBEDMENT FOR SS, A307 OR A36 THIRD ROD HIT-TZ	4 1/4" 3 1/2"	5 1/2" 4"	6 3/4" 5 1/4"
MAX TORQUE (FT LBS) SS, A307, A36 THIRD ROD HIT-TZ	30 20	75 50	150 105

TYPICAL ADHESIVE ANCHOR FOR SOLID & GROUTED MASONRY AND CONCRETE

DETAIL 2
SCALE: NTS

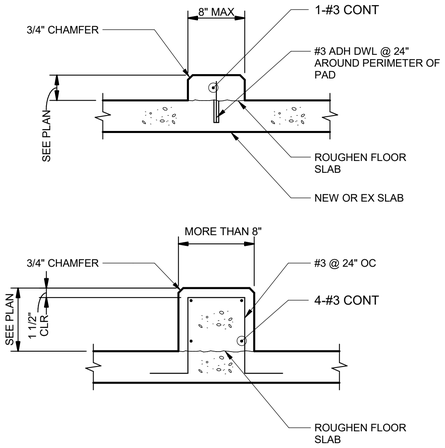

TYPICAL CURB

DETAIL 3
SCALE: NTS

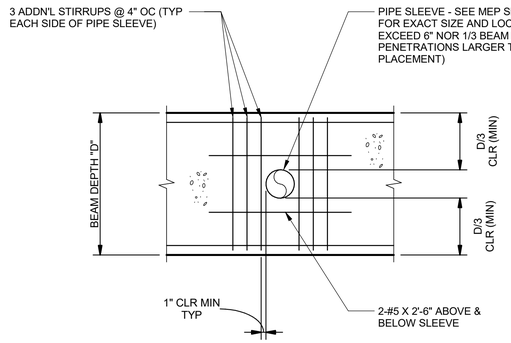

TYPICAL HORIZONTAL GRADEBEAM PENETRATION

DETAIL 4
SCALE: NTS

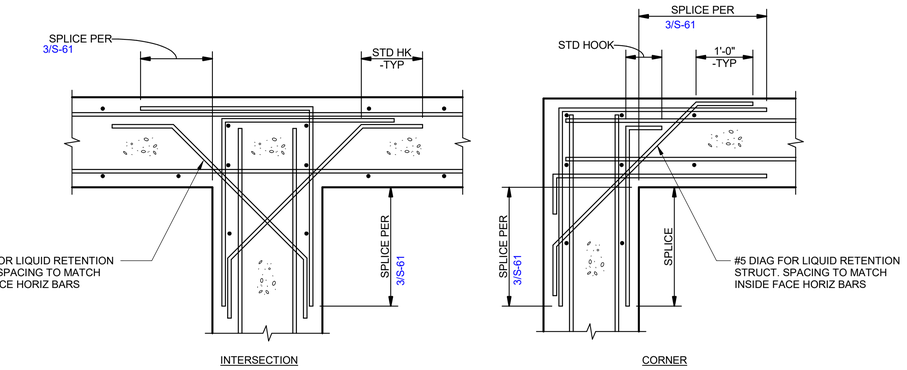

NOTES:

1. CORNER AND INTERSECTING REINF SHALL MATCH SIZE AND SPACING OF WALL REINF
2. HORIZ BARS ARE IN SAME PLANE

TYPCAL WALL/BEAM CORNER AND INTERSECTING REINFORCING

DETAIL 5
SCALE: NTS

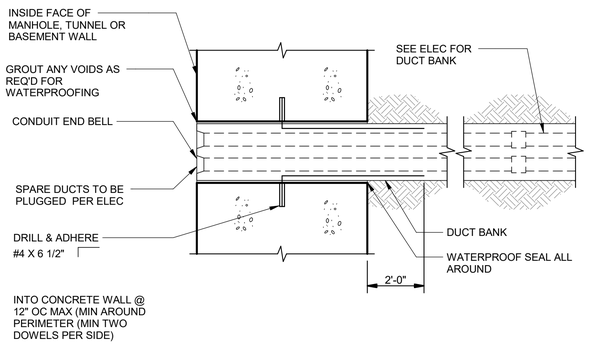

NOTES:

1. REFER TO ELECTRICAL DRAWINGS FOR LOCATION AND CONFIGURATION OF DUCT BANKS.
2. REFER TO 1/S-65 FOR ADHESIVE DOWEL INFO.
3. REFER TO ELECTRICAL DRAWINGS AND SPECIFICATIONS FOR INFO REGARDING CONDUIT BELL ENDS & DUCT PLUGS.

TYPICAL DUCT BANK PENETRATION

DETAIL 6
SCALE: NTS

NO.	DATE	REVISION	APP.

JQ-IMEG
100 GLASS STREET
SUITE 202
DALLAS, TX 75207
P: 972.392.7340
TBPELS FIRM F-26651
PROJECT NUMBER : 26021466.00
JQ-IMEG RESERVES PROPRIETARY RIGHTS, INCLUDING COPYRIGHTS, TO THIS DRAWING AND THE DATA SHOWN THEREON. SAID DRAWING AND/OR DATA ARE THE EXCLUSIVE PROPERTY OF JQ-IMEG AND SHALL NOT BE USED OR REPRODUCED FOR ANY PURPOSE WHATSOEVER WITHOUT THE WRITTEN APPROVAL AND PARTICIPATION OF JQ-IMEG. ©2026 JQ-IMEG LLC

MBROH 20 ENGINEERING
11757 KATY FWY,
SUITE 625
HOUSTON, TX 77077
713-468-2545

SURVEYED BY:
FB NO.

INTERIM REVIEW DOCUMENTS
NOT INTENDED FOR BIDDING, PERMIT OR CONSTRUCTION PURPOSES)
JOHN D. MISCHKOT
TEXAS REGISTRATION No: 107566
DATE: 11/02/2026

CITY OF HOUSTON
HOUSTON PUBLIC WORKS

WHITE OAKS WWTP IMPROVEMENTS

STRUCTURAL

TYPICAL STRUCTURAL DETAILS VI

WBS NUMBER	FOR CITY OF HOUSTON USE ONLY
R-000265-0158-3	
DRAWING SCALE	
NTS	
CITY OF HOUSTON, PM	
SHAHIDUR RAHMAN, PE	
S-65	SHEET NO. 90 OF 189

Autodesk Docs://White Oaks Wastewater Treatment Plant Improvements/250041521_01_CoH WHITE OAK_Improvements_Ex AB_R25.rvt

11/1/2026 10:57:04 PM

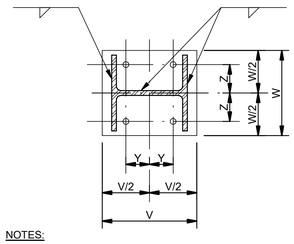

NOTES:

1. WELD TO BE MINIMUM SIZE REQUIRED BY AISC FOR THICKNESS OF BASE PLATE USED.
2. FOR BASE PLATE ELEVATION SEE DTL 3/S-66.

TYPICAL BASE PLATE

DETAIL 1
SCALE: NTS

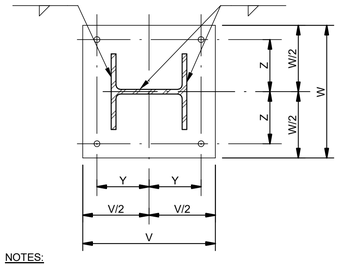

NOTES:

1. WELD TO BE MINIMUM SIZE REQUIRED BY AISC FOR THICKNESS OF BASE PLATE USED.
2. FOR BASE PLATE ELEVATION SEE DTL 3/S-66.

TYPICAL BASE PLATE

DETAIL 2
SCALE: NTS

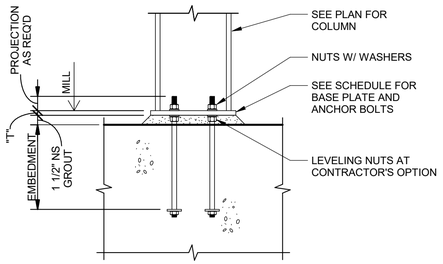

ELEVATION

TYPICAL COLUMN BASE PLATE

DETAIL 3
SCALE: NTS

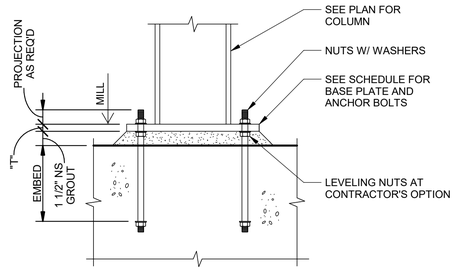

TYPICAL COLUMN BASE PLATE

DETAIL 4
SCALE: NTS

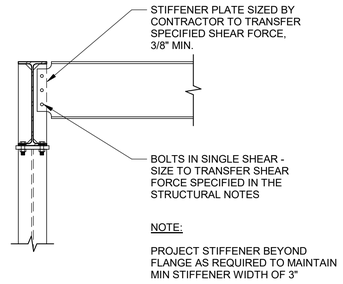

TYPICAL BOLTED SIMPLE BEAM TO BEAM WEB CONNECTION AT COLUMN CAP

DETAIL 5
SCALE: NTS

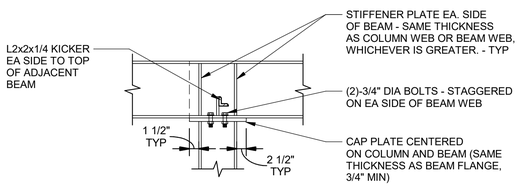

COLUMN WEB PARALLEL TO BEAM

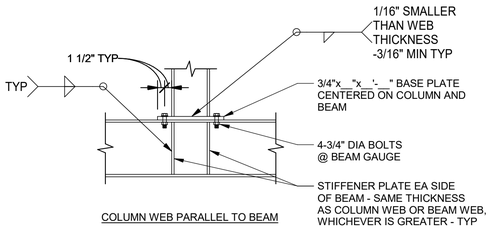

COLUMN WEB PARALLEL TO BEAM

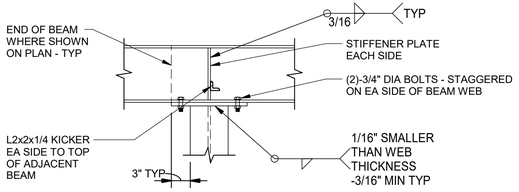

COLUMN WEB PERPENDICULAR TO BEAM

NOTES:

1. CONNECT INTERSECTING BEAMS TO STIFFENER PLATES USING BOLTS IN SINGLE SHEAR DESIGNED FOR ECCENTRIC BEAM REACTION. SEE 5/S-66.
2. SEE ROOF PLAN FOR ROOF SLOPE AND SLOPE CAP PLATES ACCORDINGLY.

TYPICAL COLUMN CAP PLATE TO BEAM CONNECTION

DETAIL 6
SCALE: NTS

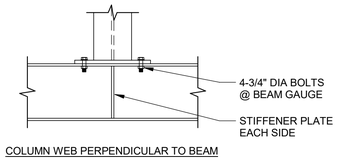

COLUMN WEB PERPENDICULAR TO BEAM

NOTES:

1. CONNECT INTERSECTING BEAMS TO STIFFENER PLATES USING BOLTS IN SINGLE SHEAR DESIGNED FOR ECCENTRIC BEAM REACTION.
2. PROVIDE FLANGE EXTENSIONS AS REQ'D TO MATCH COLUMN BASE PLATE WIDTH.

TYPICAL COLUMN SUPPORTED ON BEAM CONNECTION

DETAIL 7
SCALE: NTS

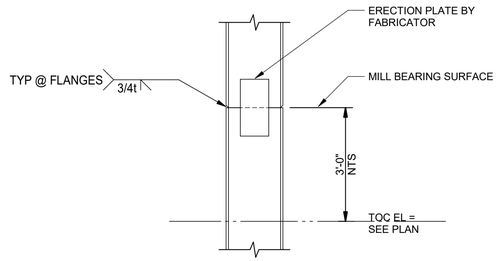

TYPICAL COLUMN SPLICE

DETAIL 8
SCALE: NTS

NO.	DATE	REVISION	APP.

JQ-IMEG
100 GLASS STREET
SUITE 202
DALLAS, TX 75207
P: 972.392.7340
TBPELS FIRM F-26651

PROJECT NUMBER : 26021466.00

JQ-IMEG RESERVES PROPRIETARY RIGHTS, INCLUDING COPYRIGHTS, TO THIS DRAWING AND THE DATA SHOWN THEREON. SAID DRAWING AND/OR DATA ARE THE EXCLUSIVE PROPERTY OF JQ-IMEG AND SHALL NOT BE USED OR REPRODUCED FOR ANY OTHER PROJECT WITHOUT THE EXPRESS WRITTEN APPROVAL AND PARTICIPATION OF JQ-IMEG. ©2026 JQ-IMEG LLC

MBROH ENGINEERING
11757 KATY FWY,
SUITE 625
HOUSTON, TX 77077
713-468-2545

INTERIM REVIEW DOCUMENTS
(NOT INTENDED FOR BIDDING, PERMIT OR CONSTRUCTION PURPOSES)

JOHN D. MISCHKOT
TEXAS REGISTRATION No: 107566
DATE: 11/02/2026

SURVEYED BY:

FB NO.

CITY OF HOUSTON
HOUSTON PUBLIC WORKS

WHITE OAKS WWTP IMPROVEMENTS

STRUCTURAL

TYPICAL STRUCTURAL DETAILS VII

WBS NUMBER	FOR CITY OF HOUSTON USE ONLY
R-000265-0158-3	
DRAWING SCALE	
NTS	
CITY OF HOUSTON, PM	
SHAHIDUR RAHMAN, PE	
S-66	SHEET NO. 91 OF 189

Autodesk Docs://White Oaks Wastewater Treatment Plant Improvements/25004152.01_CoH WHITE OAK_Improvements_Ex AB_R25.rvt

11/1/2026 10:57:05 PM

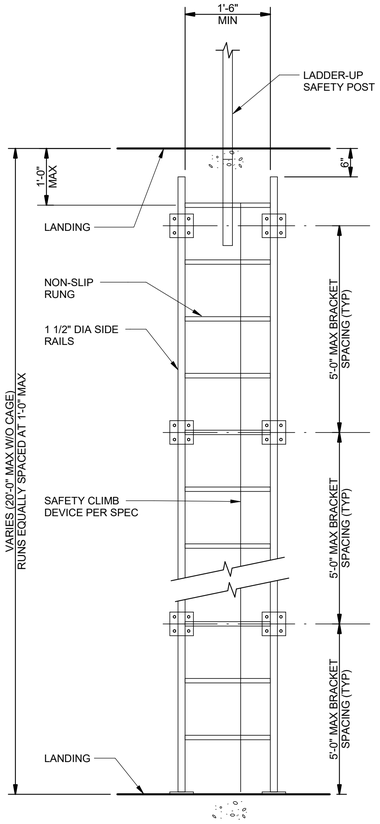

ELEVATION

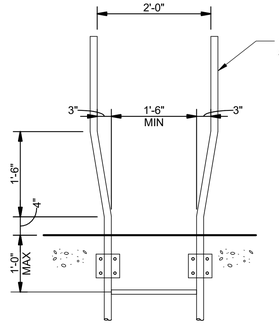

@ STEP THRU

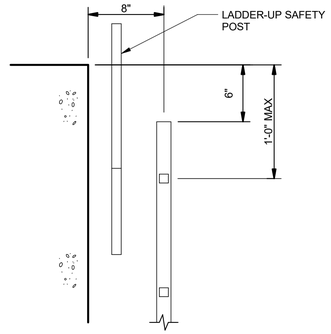

AT ROOF ACCESS HATCH

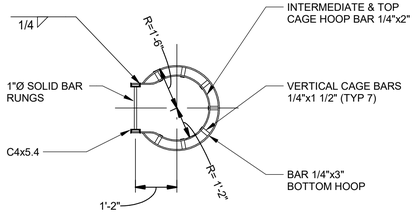

TOP VIEW

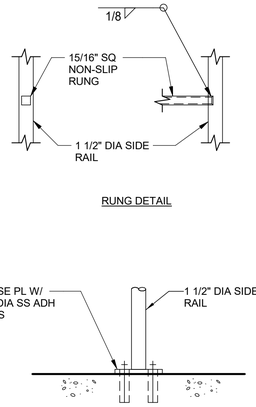

RUNG DETAIL

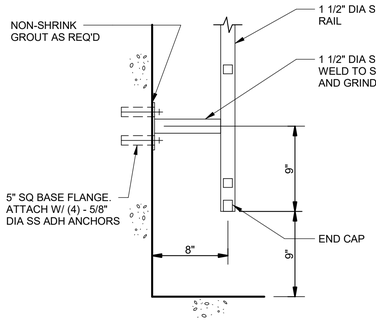

BRACKET CONNECTION

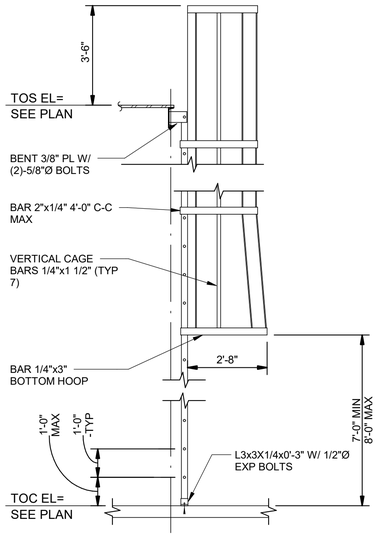

SIDE VIEW

TYPICAL CAGED LADDER

DETAIL 2
SCALE: NTS

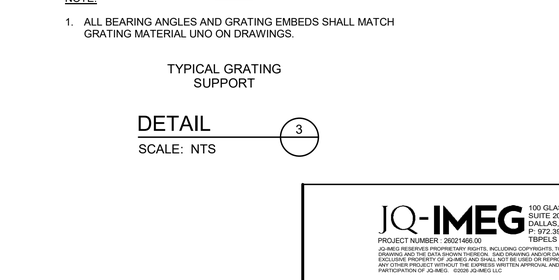

TYPE-A

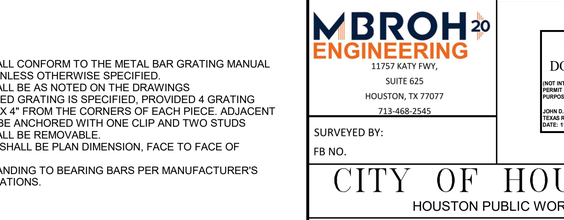

TYPE-B

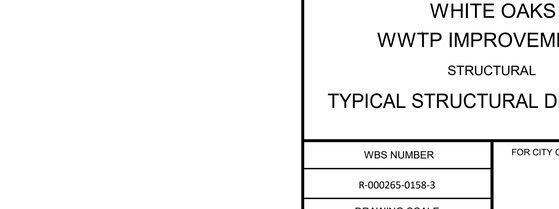

TYPE-C

NOTE:

1. ALL BEARING ANGLES AND GRATING EMBEDS SHALL MATCH GRATING MATERIAL UNO ON DRAWINGS.

TYPICAL GRATING SUPPORT

DETAIL 3
SCALE: NTS

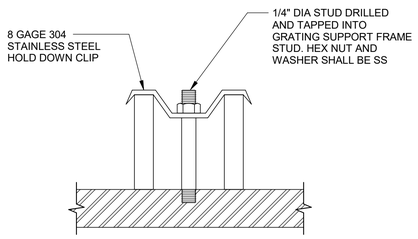

TYPICAL GRATING CONNECTION AT EXTERIOR

DETAIL 4
SCALE: NTS

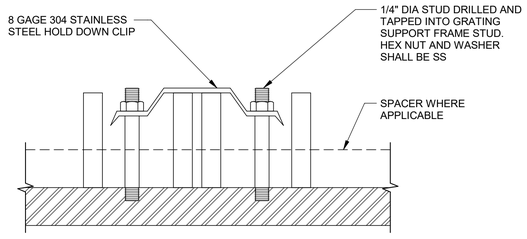

TYPICAL GRATING CONNECTION AT PANEL JOINT

DETAIL 5
SCALE: NTS

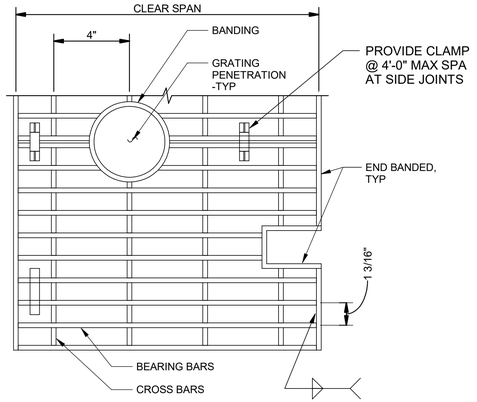

TYPICAL GRATING

DETAIL 6
SCALE: NTS

NOTES:

1. GRATING SHALL CONFORM TO THE METAL BAR GRATING MANUAL OF NAAMM. UNLESS OTHERWISE SPECIFIED.
2. GRATING SHALL BE AS NOTED ON THE DRAWINGS
3. WHERE BOLTED GRATING IS SPECIFIED, PROVIDED 4 GRATING CLIPS APPROX 4" FROM THE CORNERS OF EACH PIECE. ADJACENT PIECES MAY BE ANCHORED WITH ONE CLIP AND TWO STUDS
4. GRATING SHALL BE REMOVABLE.
5. CLEAR SPAN SHALL BE PLAN DIMENSION, FACE TO FACE OF OPENING.
6. WELD END BANDING TO BEARING BARS PER MANUFACTURER'S RECOMMENDATIONS.

NO.	DATE	REVISION	APP.

JQ-IMEG
100 GLASS STREET
SUITE 202
DALLAS, TX 75207
P: 972.392.7340
TBPELS FIRM F-26651
PROJECT NUMBER : 26021466.00
JQ-IMEG RESERVES PROPRIETARY RIGHTS, INCLUDING COPYRIGHTS, TO THIS DRAWING AND THE DATA SHOWN THEREON. SAID DRAWING AND/OR DATA ARE THE EXCLUSIVE PROPERTY OF JQ-IMEG AND SHALL NOT BE USED OR REPRODUCED FOR ANY OTHER PROJECT WITHOUT THE EXPRESS WRITTEN APPROVAL AND PARTICIPATION OF JQ-IMEG. ©2026 JQ-IMEG LLC

MBROH 20 ENGINEERING
11757 KATY FWY,
SUITE 625
HOUSTON, TX 77077
713-468-2545

SURVEYED BY:

FB NO.

INTERIM REVIEW DOCUMENTS
(NOT INTENDED FOR BIDDING, PERMIT OR CONSTRUCTION PURPOSES)

JOHN D. MISCHKOT
TEXAS REGISTRATION No: 107566
DATE: 11/02/2026

CITY OF HOUSTON
HOUSTON PUBLIC WORKS

WHITE OAKS WWTP IMPROVEMENTS

STRUCTURAL

TYPICAL STRUCTURAL DETAILS VIII

WBS NUMBER	FOR CITY OF HOUSTON USE ONLY
R-000265-0158-3	
DRAWING SCALE	
3/4" = 1'-0"	
CITY OF HOUSTON, PM	
SHAHIDUR RAHMAN, PE	
SHEET NO. 92 OF 189	

S-67

Autodesk Docs://White Oaks Wastewater Treatment Plant Improvements/25004152.01_COH WHITE OAK_Improvements_ExAB_R25.rvt

11/1/2026 10:57:07 PM

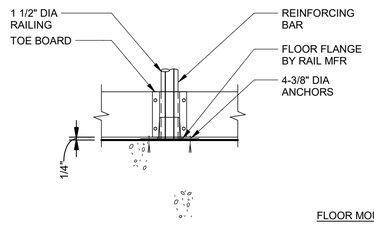

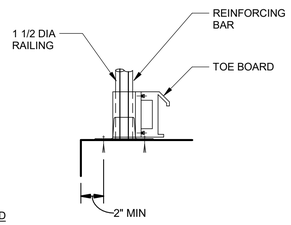

FLOOR MOUNTED

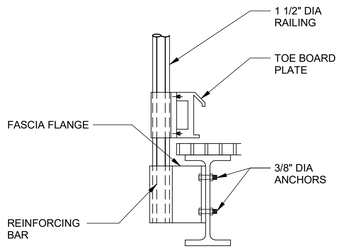

AT BEAM

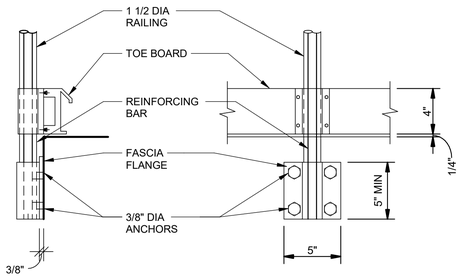

SIDE MOUNT DETAIL

NOTE:

1. ALL ANCHORS, BOLTS, NUTS, AND CONNECTIONS SHALL BE TYPE 316 STAINLESS STEEL.

TYPICAL RAILING POST MOUNTING

DETAIL 1
SCALE: NTS

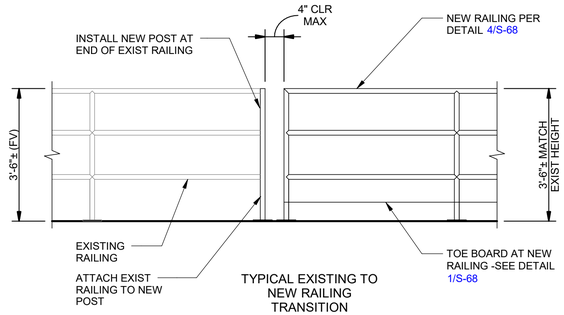

TYPICAL EXISTING TO NEW RAILING TRANSITION

DETAIL 2
SCALE: NTS

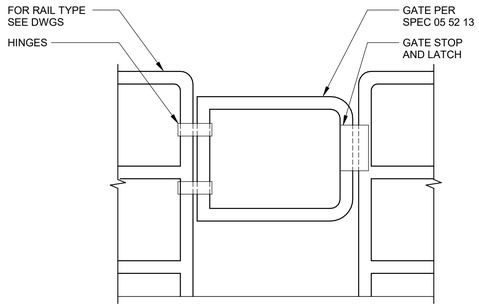

TYPICAL SWING GATE AT RAILING OPENING

DETAIL 3
SCALE: NTS

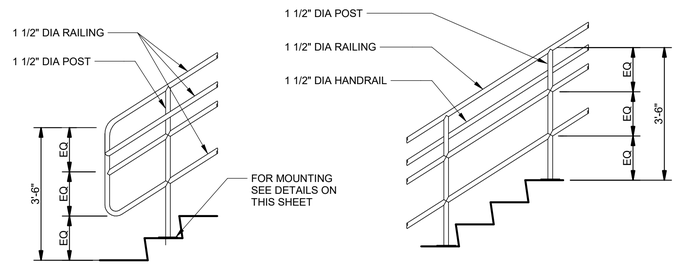

(BOTTOM)
TYPICAL STAIR END

TYPICAL STAIR

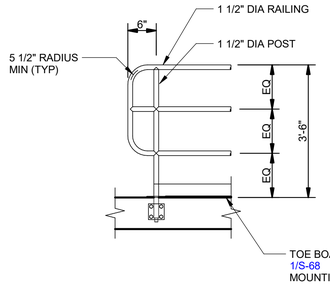

TYPICAL RAILING END

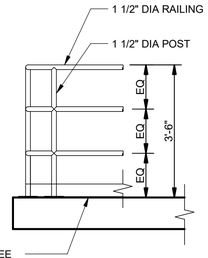

TYPICAL RAILING CORNER

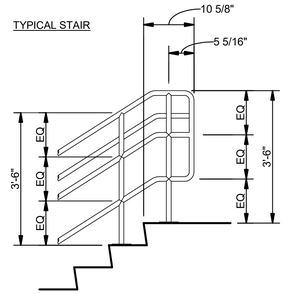

TYPICAL STAIR END

TYPICAL RAILING

DETAIL 4
SCALE: NTS

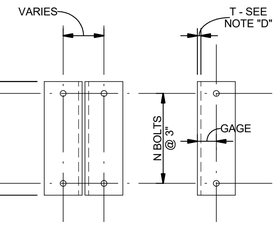

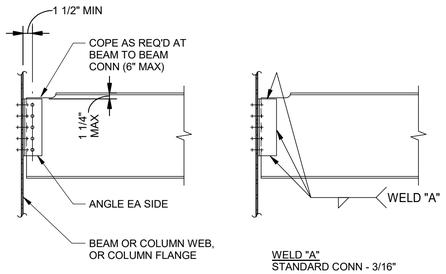

BOLTED/BOLTED CONNECTION

WELD "A"
STANDARD CONN - 3/16"
HEAVY CONN - 1/4"

BOLTED/WELDED CONNECTION

BEAM SIZE	STANDARD			HEAVY		
	ANGLE LENGTH (L)	NO OF ROWS OF BOLTS (N)	MAX BEAM REACTION (KIPS)	ANGLE LENGTH (L)	NO OF ROWS OF BOLTS (N)	MAX BEAM REACTION (KIPS)
W8	5 1/2"	2	17	-	-	NA
W10	5 1/2"	2	19	-	-	NA
W12	5 1/2"	2	20	8 1/2"	3	28
W14	8 1/2"	3	32	11 1/2"	4	42
W16	8 1/2"	3	35	11 1/2"	4	46
W18	11 1/2"	4	55	14 1/2"	5	68
W21	11 1/2"	4	64	17 1/2"	5	94
W24	14 1/2"	5	89	20 1/2"	7	123
W27	14 1/2"	5	89	23 1/2"	8	148
W30	17 1/2"	6	104	26 1/2"	9	167
W33	20 1/2"	7	119	29 1/2"	10	186
W36	23 1/2"	8	133	29 1/2"	10	186
W40	26 1/2"	9	147	29 1/2"	10	213
W44	29 1/2"	10	160	29 1/2"	10	213

NOTES:

1. RIGHT ANGLE CONNECTIONS SHALL BE DOUBLE ANGLE AS SCHEDULED. SKEWED CONNECTIONS SHALL BE BENT DOUBLE ANGLES OR BENT PLATES PER DET X/XX.
2. NOTED REACTIONS ARE FOR SERVICE LOADS.
3. REFER TO "STRUCTURAL STEEL CONNECTIONS" IN STRUCTURAL NOTES FOR ADDN'L INFO.
4. MINIMUM CONNECTION: ANGLE THICKNESS IS 1/4" TYPICAL AND 5/16" AT W33 AND DEEPER "HEAVY" CONNECTIONS.
5. BOLTS ARE 3/4" DIA TYP AND 7/8" DIA AT W40 & W44 "HEAVY CONNECTIONS". BOLTS ARE A325N.
6. BEAM CONNECTIONS ARE "STANDARD" UNO ON PLAN.
7. CONTRACTOR SHALL CHECK DESIGN OF ALL BEAMS REQUIRING COPES GREATER THAN SHOWN IN DETAIL BASED ON REACTIONS SHOWN IN TABLE. CONNECTION ANGLES, BOLTS AND WELDS SHALL NOT BE LESS THAN THAT SHOWN.

TYPICAL AISC TYPE 2 SIMPLE FRAMING CONNECTIONS

DETAIL 5
SCALE: NTS

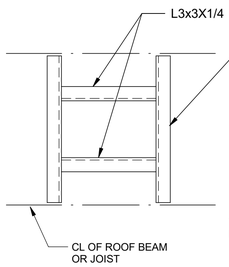

PLAN

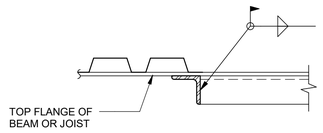

SECTION "A"

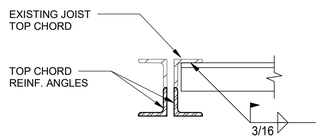

SECTION "B"

TYPICAL ROOF OPENING

DETAIL 6
SCALE: NTS

JQ-IMEG
100 GLASS STREET
SUITE 202
DALLAS, TX 75207
P: 972.392.7340
TBPELS FIRM F-26651

PROJECT NUMBER : 26021466.00

JQ-IMEG RESERVES PROPRIETARY RIGHTS, INCLUDING COPYRIGHTS, TO THIS DRAWING AND THE DATA SHOWN THEREON. SAID DRAWING AND/OR DATA ARE THE EXCLUSIVE PROPERTY OF JQ-IMEG AND SHALL NOT BE USED OR REPRODUCED FOR ANY OTHER PROJECT WITHOUT THE EXPRESS WRITTEN APPROVAL AND PARTICIPATION OF JQ-IMEG. ©2026 JQ-IMEG LLC

MBROH ENGINEERING
11757 KATY FWY,
SUITE 625
HOUSTON, TX 77077
713-468-2545

SURVEYED BY:
FB NO.

INTERIM REVIEW DOCUMENTS
(NOT INTENDED FOR BIDDING, PERMIT OR CONSTRUCTION PURPOSES)

JOHN D. MISCHKOT
TEXAS REGISTRATION No: 107566
DATE: 11/02/2026

CITY OF HOUSTON
HOUSTON PUBLIC WORKS

WHITE OAKS WWTP IMPROVEMENTS

STRUCTURAL

TYPICAL STRUCTURAL DETAILS IX

WBS NUMBER	FOR CITY OF HOUSTON USE ONLY
R-000265-0158-3	
DRAWING SCALE	
As indicated	
CITY OF HOUSTON, PM	
SHAHIDUR RAHMAN, PE	
SHEET NO. 93 OF 189	

S-68

NO.	DATE	REVISION	APP.

Autodesk Docs://White Oaks Wastewater Treatment Plant Improvements/25004152.01_COH WHITE OAK_Improvements_Ex AB_R25.rvt

11/1/2026 10:57:08 PM

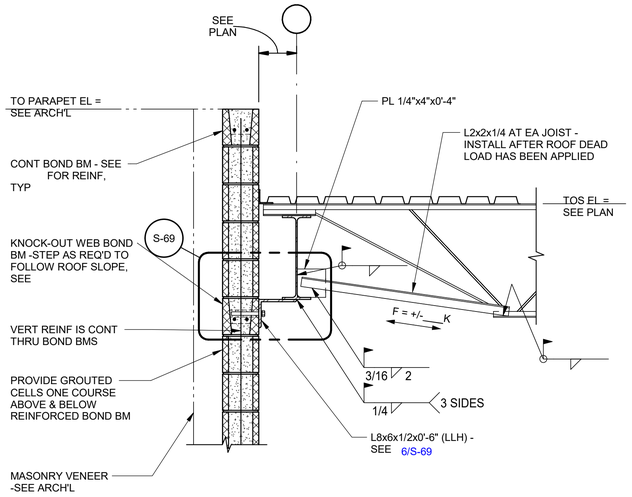

TYPICAL MASONRY WALL BRACING

DETAIL 1
SCALE: NTS

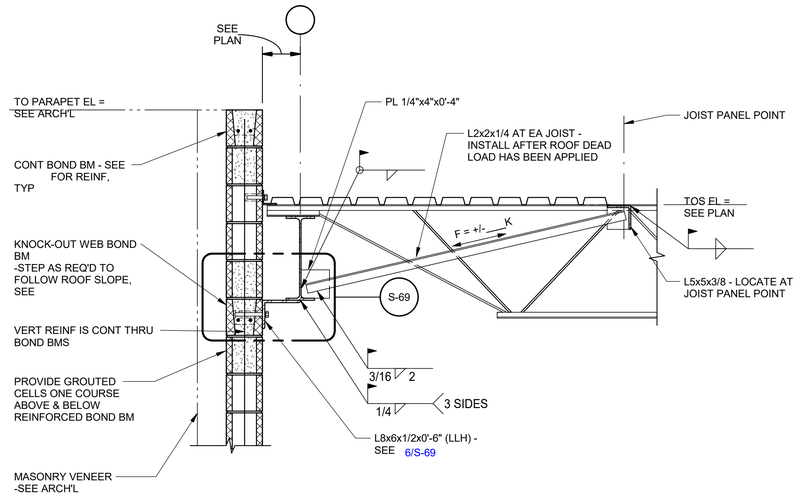

TYPICAL MASONRY WALL BRACING

DETAIL 2
SCALE: NTS

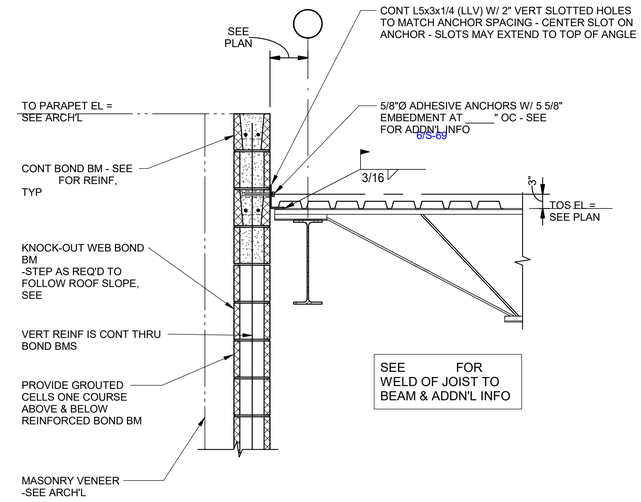

TYPICAL MASONRY WALL BRACING

DETAIL 3
SCALE: NTS

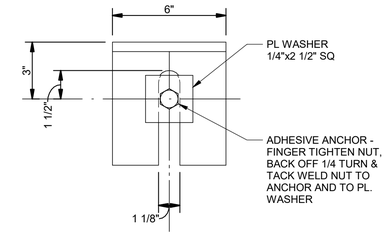

ELEVATION "A"

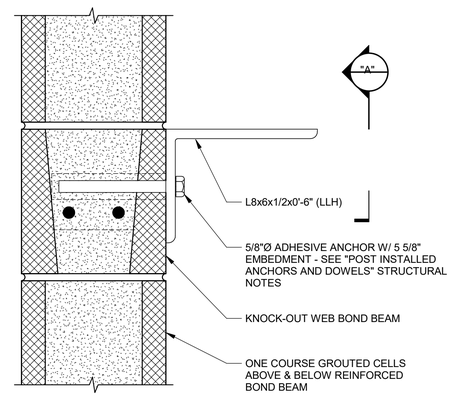

SECTION

TYPICAL ENLARGED ANGLE TO MASONRY WALL CONNECTION

DETAIL 6
SCALE: NTS
S-69

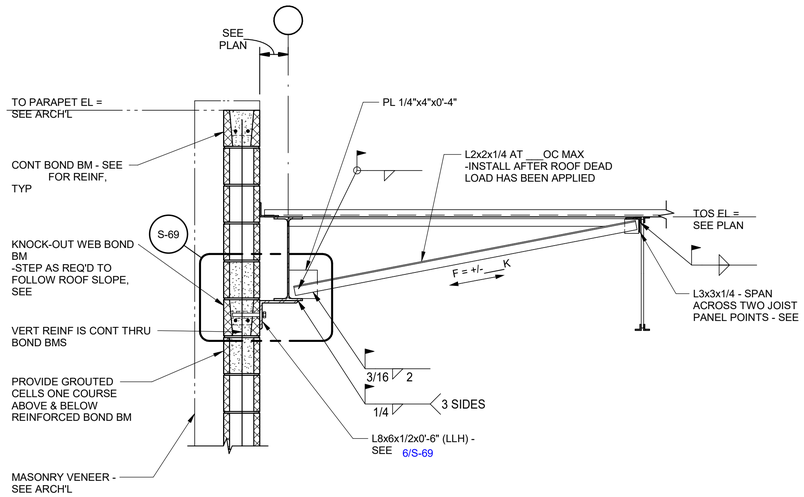

TYPICAL MASONRY WALL BRACING

DETAIL 4
SCALE: NTS

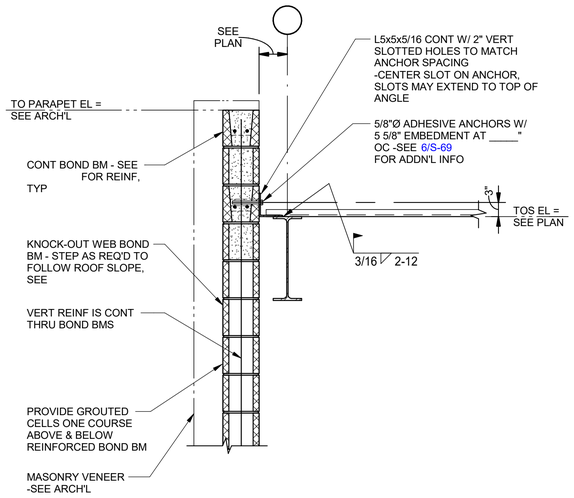

TYPICAL MASONRY WALL BRACING

DETAIL 5
SCALE: NTS

JQ-IMEG
100 GLASS STREET
SUITE 202
DALLAS, TX 75207
P: 972.392.7340
TBPELS FIRM F-26651

PROJECT NUMBER : 26021466.00

JQ-IMEG RESERVES PROPRIETARY RIGHTS, INCLUDING COPYRIGHTS, TO THIS DOCUMENT AND ANY DATA CONTAINED HEREIN. SUCH DOCUMENT AND DATA ARE THE EXCLUSIVE PROPERTY OF JQ-IMEG AND SHALL NOT BE USED OR REPRODUCED FOR ANY OTHER PROJECT WITHOUT THE EXPRESS WRITTEN APPROVAL AND PARTICIPATION OF JQ-IMEG. ©2026 JQ-IMEG LLC

MBROH ENGINEERING
11757 KATY FWY,
SUITE 625
HOUSTON, TX 77077
713-468-2545

INTERIM REVIEW DOCUMENTS
NOT INTENDED FOR BIDDING, PERMIT OR CONSTRUCTION PURPOSES)
JOHN D. MISCHKOT
TEXAS REGISTRATION No: 107566
DATE: 11/02/2026

SURVEYED BY:
FB NO.

CITY OF HOUSTON
HOUSTON PUBLIC WORKS

WHITE OAKS WWTP IMPROVEMENTS

STRUCTURAL

TYPICAL STRUCTURAL DETAILS X

WBS NUMBER	FOR CITY OF HOUSTON USE ONLY
R-000265-0158-3	
DRAWING SCALE	
As indicated	
CITY OF HOUSTON, PM	
SHAHIDUR RAHMAN, PE	

S-69 SHEET NO. 94 OF 189

NO.	DATE	REVISION	APP.

Autodesk Docs://White Oaks Wastewater Treatment Plant Improvements/25004152.01_CoH WHITE OAK_Improvements_Ex AB_R25.rvt

11/1/2026 10:57:09 PM

CONCRETE REPAIR MORTAR FOR REPAIR OF SPALLED CONCRETE:

1. CONCRETE REPAIR MORTAR SHALL BE A POLYMER MODIFIED, CEMENTITIOUS PRODUCT EQUAL TO THE FOLLOWING:
   A. HORIZONTAL APPLICATIONS: "SIKATOP 122 PLUS" REPAIR MORTAR AS MANUFACTURED BY THE SIKA CORPORATION, LYNDHURST, NEW JERSEY.
   B. OVERHEAD OR VERTICAL APPLICATIONS: "SIKATOP 123 PLUS" NON-SAG MORTAR AS MANUFACTURED BY THE SIKA CORPORATION, LYNDHURST, NEW JERSEY.
2. ALL SURFACES TO WHICH CONCRETE IS TO BE APPLIED SHALL HAVE ALL LOOSE AND UNSOUND MATERIAL REMOVED. SURFACE PREPARATION SHALL BE IN ACCORDANCE WITH THE MANUFACTURER'S RECOMMENDATIONS. AT A MINIMUM PROVIDE A 1/16" SURFACE PROFILE (CSP-5) PER ICRI GUIDELINE 310.1R-2008 (FORMERLY 03730).
3. IF MORE THAN ONE HALF THE CIRCUMFERENCE OF A REINFORCING BAR IS EXPOSED, CHIP BEHIND BAR MIN. 3/4"
4. WIREBRUSH, POWER TOOL BRUSH, OR SANDBLAST ANY EXPOSED RUSTED REINFORCING STEEL TO REMOVE LOOSE RUST. COAT EXPOSE STEEL USING ANTI-CORROSION COATING, SIKA ARMATEC 110 EPOCEM OR EQUIVALENT AS DETERMINED BY ENGINEER.
5. AT PERIMETER OF AREA TO BE REPAIRED, SAWCUT THE EXISTING CONCRETE TO A MINIMUM DEPTH OF 1/4". DO NOT FEATHER REPAIR MORTAR AT EDGES.
6. COMPLY WITH ALL HANDLING, MIXING, PLACING AND CURING REQUIREMENTS AS SPECIFIED BY THE REPAIR MORTAR MANUFACTURER.
7. EXTEND MORTAR WITH 3/8" CLEAN PEA GRAVEL AGGREGATE WHERE THICKNESS OF REPAIR EXCEEDS 1" AND AS REQUIRED BY PRODUCT SPECIFICATIONS.
8. APPLY SCRUB COAT OF REPAIR MORTAR TO SATURATED SURFACE DRY CONCRETE IN ACCORDANCE WITH PRODUCT SPECIFICATIONS. AS ALTERNATE TO SCRUB COAT, CONTRACTOR MAY APPLY ONE COAT OF SIKA ARMATEC 110 BONDING AGENT IN ACCORDANCE WITH MANUFACTURER'S INSTRUCTIONS.
9. FINISH CONCRETE REPAIR MORTAR TEXTURE TO MATCH TEXTURE OF SURROUNDING CONCRETE.
10. CONTRACTOR SHALL BE CERTIFIED BY THE MANUFACTURER FOR THE APPLICATION OF PRODUCT.
11. REFER TO SPEC. SECTION 3930 FOR ADDITIONAL INFORMATION.

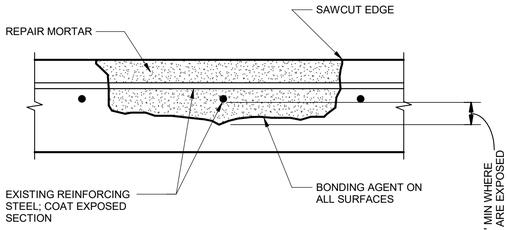

TYPICAL MORTAR REPAIR

DETAIL 1
SCALE: NTS

PRESSURE INJECTED URETHANE GROUT:

1. EXPANDING POLYURETHANE GROUT SHALL BE IN ACCORDANCE WITH SPECIFICATION SECTION 03930.
2. GROUT SHALL BE LOW-VISCOSITY, HYDROPHOBIC POLYURETHANE, FLEXIBLE WHEN CURED, AND DESIGNED FOR USE IN HAIRLINE CRACKS. SUBMIT PROPOSED MATERIAL FOR REVIEW AND APPROVAL. POLYURETHANE GROUTS OFFERED BY THE FOLLOWING MANUFACTURERS ARE ACCEPTABLE:
   A. SIKA CORPORATION
   B. OR APPROVED EQUAL
3. ALL SURFACES OF CRACKS TO RECEIVE URETHANE GROUT SHALL BE FREE OF ALL LOOSE AND UNSOUND MATERIAL, OIL, GREASE, WAX, OR OTHER BOND INHIBITING AGENTS. USE SANDBLAST OR WATERBLAST TO CLEAN SURFACE. ACID ETCHING SHALL NOT BE USED. SEAL FACE OF CRACKS USING EPOXY PASTE ADHESIVE.
4. DRILL AND INSTALL INJECTION PORTS (PACKERS) AT A 45 DEGREE ANGLE TO THE SURFACE IN ORDER TO INTERSECT THE CRACK AT THE MID-DEPTH OF THE STRUCTURAL MEMBER. STAGGER HOLES ON OPPOSITE SIDES OF THE CRACK. PORT SPACING IS DEPENDENT UPON CRACK WIDTH, AND MAY VARY FROM 6" TO 24".
5. FLUSH CRACKS WITH CLEAN WATER PRIOR TO PRESSURE INJECTION WITH URETHANE GROUT. IF WATER DOES NOT TRAVEL TO ADJACENT PORTS, DRILL AND PORT ADDITIONAL HOLES.
6. BEGIN INJECTION OF URETHANE GROUT AT THE INJECTION PORT OF LOWEST ELEVATION OR AT ONE END OF HORIZONTAL CRACK. INJECT GROUT IN ACCORDANCE WITH MANUFACTURER'S RECOMMENDATIONS UNTIL ENTIRE CRACK IS FILLED.
7. FOLLOW URETHANE GROUT INJECTION WITH WATER INJECTION AS RECOMMENDED BY MANUFACTURER.
8. ANY INJECTED CRACK THAT CONTINUES TO EXHIBIT SIGNS OF LEAKS OR SEEPAGE SHALL BE RE-INJECTED.
9. AFTER COMPLETION OF INJECTION, REMOVE EXCESS GROUT AND ALL INJECTION PORTS, SLEEVES, ETC. CLEAN AND PATCH HOLES USING NON-SHRINK GROUT. GRIND SURFACE SEALER FLUSH WITH SURROUNDING CONCRETE.
10. ROUT AND SEAL FACE OF CRACK ON WATER-CONTAINING SIDE OF WALL USING FLEXIBLE SEALANT. IN CASE OF CONFLICT BETWEEN THE REPAIR MATERIAL MANUFACTURER'S APPLICATION GUIDELINES AND THE NOTES PROVIDED ABOVE, THE MANUFACTURER'S GUIDELINES SHALL GOVERN.
11. THE NOTES PROVIDED ABOVE ARE FOR GENERAL INFORMATION ONLY.

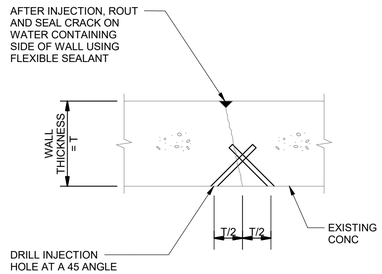

WALL PLAN OR SLAB SECTION

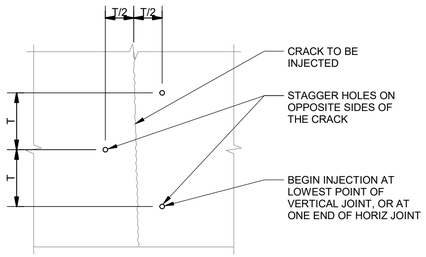

WALL ELEVATION OR SLAB PLAN

TYPICAL CRACK INJECTION

DETAIL 2
SCALE: NTS

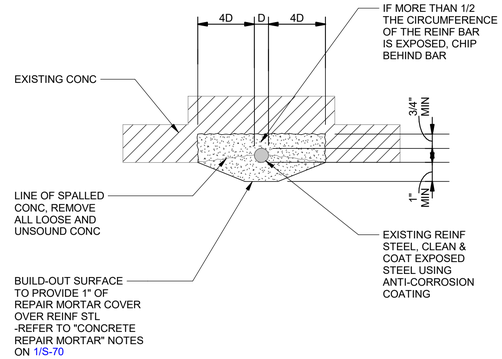

TYPICAL REPAIR

DETAIL 5
SCALE: NTS

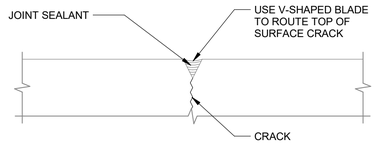

SECTION @ CRACK - OPTION 1

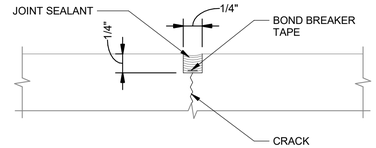

SECTION @ CRACK - OPTION 2

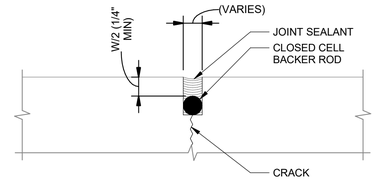

SECTION @ CONTROL JOINT

JOINT SEALANT

1. JOINT SEALANT SHALL BE 2-COMPONENT, PREMIUM GRADE, POLYURETHANE-BASE, ELASTOMETRIC SEALANT WITH A CHEMICAL CURE. SEALANT SHALL HAVE A SELF-LEVELING CONSISTENCY IN HORIZONTAL APPLICATIONS.
2. CRACKS SHALL BE ROUTED WITH A V-SHAPED BLADE, OR TO A MINIMUM DIMENSION OF 1/4 IN. BY 1/4 IN. JOINT WALLS SHALL BE FREE OF OIL, GREASE, CURING COMPOUND RESIDUES, AND ANY OTHER FOREIGN MATTER THAT MAY PREVENT BOND. CLEANING AND PREPARATION OF JOINT SURFACES SHALL BE ACCOMPLISHED BY MECHANICAL MEANS.
3. ALL JOINT SURFACES SHALL BE CLEAN, SOUND AND FROST-FREE.
4. BOND BREAKER TAPE, BACKER ROD OR OTHER APPROVED METHOD SHALL BE USED IN BOTTOM OF JOINT TO PREVENT BOND.
5. POUR OR EXTRUDE SEALANT IN ONE DIRECTION AND ALLOW TO FLOW AND LEVEL AS NECESSARY. PLACE NOZZLE OF GUN INTO BOTTOM OF JOINT AND FILL ENTIRE JOINT. KEEP THE NOZZLE DEEP IN THE SEALANT AND CONTINUE WITH STEADY FLOW OF SEALANT PRECEDING NOZZLE TO AVOID AIR ENTRAPMENT. DO NOT OVERLAP SEALANT. TOOL JOINT SURFACE AS REQUIRED.
6. JOINT SEALANT SHALL BE SIKAFLEX 2C SL (SELF-LEVELING) OR SIKAFLEX 2C NS (NON-SAG) BY SIKA CORP. OR APPROVED EQUAL.
7. SUBMITTALS: SUBMIT MANUFACTURER'S DATA SHEETS AND APPLICATION INSTRUCTIONS FOR REVIEW.

TYPICAL REPAIR

DETAIL 3
SCALE: NTS

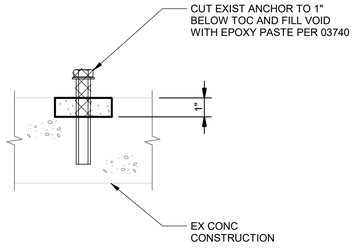

TYPICAL ANCHORAGE REPAIR

DETAIL 6
SCALE: NTS

PRE-COMPRESSED FOAM SEALANT:

1. PRE-COMPRESSED FOAM SEALANT SHALL BE A PREFORMED EXPANDING FOAM SEALANT PRODUCED BY IMPREGNATING PERMANENTLY ELASTIC, HIGH-DENSITY, OPEN-CELL POLYURETHANE FOAM WITH WATER-BASED, POLYMER-MODIFIED ASPHALT. MATERIAL SHALL BE PRECOMPRESSED TO 20% OF THE MATERIAL'S ORIGINAL UNCOMPRESSED DIMENSION.
2. ALL JOINT SURFACES SHALL BE FREE FROM GROSS IRREGULARITIES, LOOSE PARTICLES, FOREIGN MATTER SUCH AS DIRT, DUST, ICE, SNOW, OR WATER, COATINGS SUCH AS OIL, GREASE, OR CURING COMPOUND RESIDUES, AND ANY OTHER FOREIGN MATTER THAT MAY PREVENT BOND. CLEANING AND PREPARATION OF JOINT SURFACES SHALL BE ACCOMPLISHED BY MECHANICAL MEANS.
3. MIX AND APPLY EPOXY PRIMER TO THE JOINT SURFACES AND INSTALL EXPANSION JOINT SEALS PER MANUFACTURER'S INSTRUCTIONS.
4. MANUFACTURER'S REPRESENTATIVE SHALL REVIEW JOINT AFTER SURFACE PREPARATION AND PRIOR TO SEAL INSTALLATION, AND SHALL OBSERVE INITIAL INSTALLATION OF SEAL TO CONFIRM CONTRACTOR IS COMPLYING WITH MANUFACTURER'S INSTRUCTIONS.
5. EXPANSION JOINT SEALS SHALL BE 20H SYSTEM BY EMSEAL JOINT SYSTEMS, LTD. OR APPROVED EQUAL.
6. SUBMITTAL: SUBMIT MANUFACTURER'S DATA SHEETS AND INSTALLATION INSTRUCTIONS FOR REVIEW.
7. REFER TO SPEC. SECTION 03930 FOR ADDITIONAL INFORMATION.

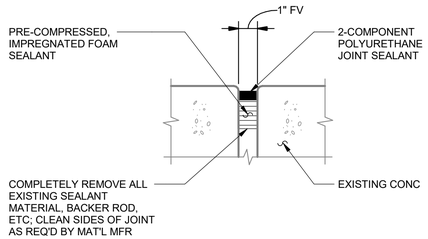

TYPICAL JOINT REPAIR

DETAIL 4
SCALE: NTS

NO.	DATE	REVISION	APP.

JQ-IMEG
100 GLASS STREET
SUITE 202
DALLAS, TX 75207
P: 972.392.7340
TBPELS FIRM F-26651
PROJECT NUMBER: 26021466.00
JQ-IMEG RESERVES PROPRIETARY RIGHTS, INCLUDING COPYRIGHTS, TO THIS DRAWING AND THE DATA SHOWN THEREON. SAID DRAWING AND/OR DATA ARE THE EXCLUSIVE PROPERTY OF JQ-IMEG AND SHALL NOT BE USED OR REPRODUCED FOR ANY OTHER PROJECT WITHOUT THE EXPRESS WRITTEN APPROVAL AND PARTICIPATION OF JQ-IMEG. ©2026 JQ-IMEG LLC

MBROH ENGINEERING
11757 KATY FWY,
SUITE 625
HOUSTON, TX 77077
713-468-2545

INTERIM REVIEW DOCUMENTS
NOT INTENDED FOR BIDDING, PERMIT OR CONSTRUCTION PURPOSES)
JOHN D. MISCHKOT
TEXAS REGISTRATION No: 107566
DATE: 11/02/2026

SURVEYED BY:
FB NO.

CITY OF HOUSTON
HOUSTON PUBLIC WORKS

WHITE OAKS WWTP IMPROVEMENTS

STRUCTURAL

TYPICAL STRUCTURAL DETAILS XI

WBS NUMBER	FOR CITY OF HOUSTON USE ONLY
R-000265-0158-3	
DRAWING SCALE	
As indicated	
CITY OF HOUSTON, PM	
SHAHIDUR RAHMAN, PE	
SHEET NO. 95 OF 189	

S-70

Autodesk Docs://White Oaks Wastewater Treatment Plant Improvements/25004152.01_Coh WHITE OAK_Improvements_Ex AB_R25.rvt

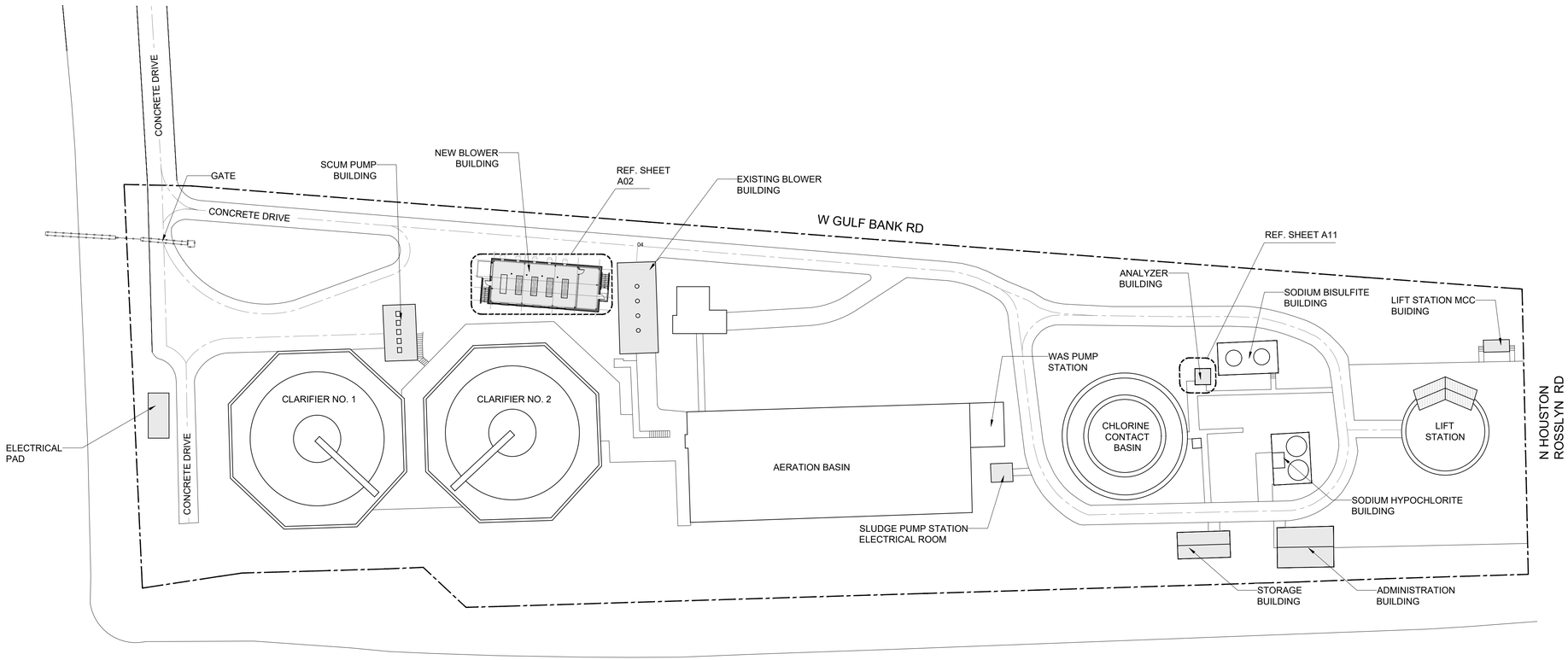

01 ARCHITECTURAL SITE PLAN
FOR REFERENCE ONLY
SCALE: 1" = 40'

0 20' 40' 80' 120'

NO.	DATE	REVISION	APP.

EJES INCORPORATED
CORPORATE OFFICE:
12801 N. CENTRAL EXPWY, SUITE 700,
DALLAS, TX 75243 TEL: 214-343-1210
HOUSTON OFFICE:
6161 SAVOY DRIVE, SUITE 830. HOUSTAN, TX 77036
TEL: 281-272-1612M

BROH ENGINEERING
11757 KATY FWY,
SUITE 625
HOUSTON, TX 77077
713-468-2545

SURVEYED BY:
FB NO.

CITY OF HOUSTON
HOUSTON PUBLIC WORKS

WHITE OAKS WWTP IMPROVEMENTS

ARCHITECTURAL SITE PLAN

WBS NUMBER	FOR CITY OF HOUSTON USE ONLY
R-000265-0158-3	
DRAWING SCALE	
1"=40'-0"	
CITY OF HOUSTON PM	
SHAHIDUR RAHMAN, PE	

A-01 SHEET NO. 96 OF 189

PLOTTED: 30/10/2026
PLOT STYLE: Coh_plot.ctb
FILE PATH: F:\Projects\201-03 - White Oak WWTP Improvements\7-Architecture\Drawings\A-01 Architectural Site Plan.dwg

PLOTTED: 30/10/2026
FILE PATH: C:\Users\snajmusahar\DC\ACCDocs\MBROH ENGINEERING INC (HOUSTON)\White Oak Wastewater Treatment Plant Improvements\Project Files\08 Architectural\01 Sheets\A-02 Blower Building FLOOR Plan.dwg

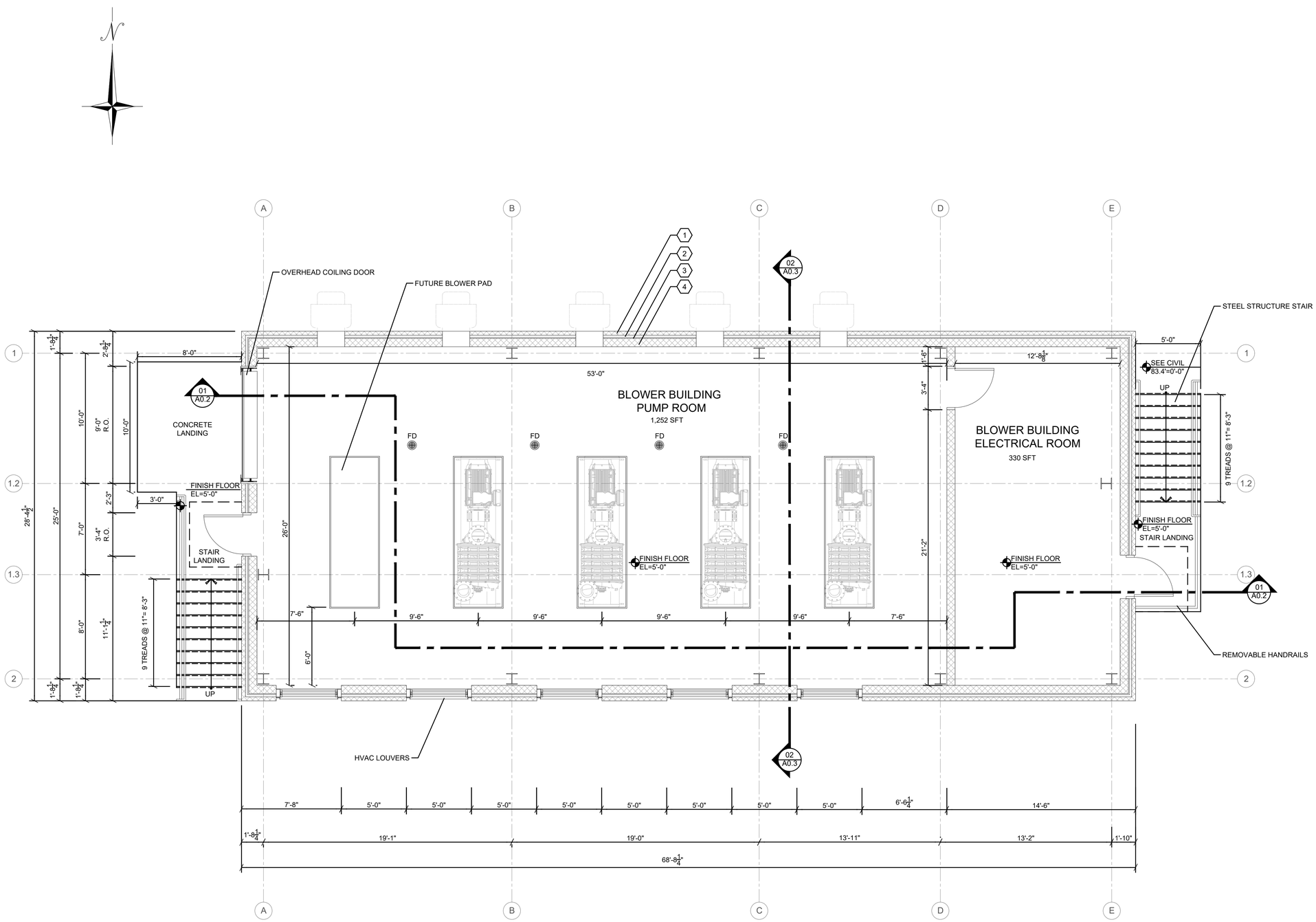

01 BLOWER BUILDING FLOOR PLAN
SCALE: 1/4" = 1'-0"
0 2' 4' 8' 12'

NOTES BY SYMBOL " ⬡ ":

1. 3-5/8" SPLIT FACE CMU VENEER
2. 2" AIR CAVITY
3. 1" RIGID FOAM INSULATION IN CAVITY
4. 7-5/8" REINFORCED CMU WALL

GENERAL NOTES

1. ALL DIMENSIONS SHALL BE VERIFIED IN THE FIELD PRIOR TO CONSTRUCTION. NOTIFY THE ARCHITECT OF ANY DISCREPANCIES BEFORE PROCEEDING WITH THE WORK.
2. DO NOT SCALE DRAWINGS. USE WRITTEN DIMENSIONS AND ELEVATIONS ONLY. WHERE DIMENSIONS ARE UNCLEAR OR MISSING, CONTACT THE ARCHITECT FOR CLARIFICATION.
3. COORDINATE ALL ARCHITECTURAL WORK WITH STRUCTURAL, MECHANICAL, ELECTRICAL, PLUMBING, PROCESS, AND EQUIPMENT DRAWINGS PRIOR TO FABRICATION OR INSTALLATION.
4. MAINTAIN REQUIRED CLEARANCES AROUND BLOWERS, PUMPS, ELECTRICAL EQUIPMENT, PANELS, AND OTHER PROCESS EQUIPMENT IN ACCORDANCE WITH MANUFACTURER REQUIREMENTS, APPLICABLE CODES, AND MAINTENANCE/ACCESS REQUIREMENTS.
5. PROVIDE ALL WALL, FLOOR, AND ROOF OPENINGS REQUIRED FOR DUCTS, PIPING, CONDUITS, LOUVERS, AND PROCESS EQUIPMENT. COORDINATE SIZES AND LOCATIONS WITH THE RESPECTIVE DISCIPLINES PRIOR TO CONSTRUCTION.
6. SEAL ALL PENETRATIONS THROUGH EXTERIOR WALLS, ROOF, AND FLOOR ASSEMBLIES TO PROVIDE A WEATHER-TIGHT AND WATERTIGHT INSTALLATION. PROVIDE FLASHING, SEALANT, SLEEVES, AND ACCESSORIES AS REQUIRED.
7. PROVIDE SEALED CONCRETE FINISH FLOOR.
8. SLOPE FLOORS TO DRAINS WHERE INDICATED AND COORDINATE ELEVATIONS WITH PROCESS AND PLUMBING REQUIREMENTS.
9. ALL EXTERIOR DOORS, FRAMES, LOUVERS, AND ASSOCIATED HARDWARE SHALL BE SUITABLE FOR THE PROJECT ENVIRONMENT AND SHALL BE CORROSION-RESISTANT WHERE EXPOSED TO MOISTURE, CHEMICALS, OR WASTEWATER-TREATMENT CONDITIONS.
10. MAINTAIN REQUIRED EXIT ACCESS AND EGRESS PATHS CLEAR OF EQUIPMENT, PIPING, STORAGE, AND OTHER OBSTRUCTIONS. DOORS SHALL OPERATE IN ACCORDANCE WITH APPLICABLE BUILDING AND LIFE-SAFETY CODE REQUIREMENTS.
11. PROVIDE FIRESTOPPING AND SEALING AT ALL REQUIRED PENETRATIONS AND JOINTS IN RATED ASSEMBLIES. COORDINATE CONSTRUCTION CLASSIFICATIONS, WALL RATINGS, AND REQUIRED SEPARATIONS WITH THE LIFE SAFETY AND CODE DRAWINGS.

NO.	DATE	REVISION	APP.

EJES INCORPORATED
CORPORATE OFFICE:
12801 N. CENTRAL EXPWY, SUITE 700,
DALLAS, TX 75243 TEL: 214-343-1210
HOUSTON OFFICE:
8161 SAVOY DRIVE, SUITE 830. HOUSTAN,
TX 77036
TEL: 281-272-1612M

MBROH ENGINEERING
11757 KATY FWY,
SUITE 625
HOUSTON, TX 77077
713-468-2545

SURVEYED BY:
FB NO.

CITY OF HOUSTON
HOUSTON PUBLIC WORKS

WHITE OAKS WWTP IMPROVEMENTS

ARCHITECTURAL
BLOWER BUILDING FLOOR PLAN

WBS NUMBER	FOR CITY OF HOUSTON USE ONLY
R-000265-0158-3	
DRAWING SCALE	
1/4"=1'-0"	
CITY OF HOUSTON PM	
SHAHIDUR RAHMAN, PE	

A-02 SHEET NO. 97 OF 189

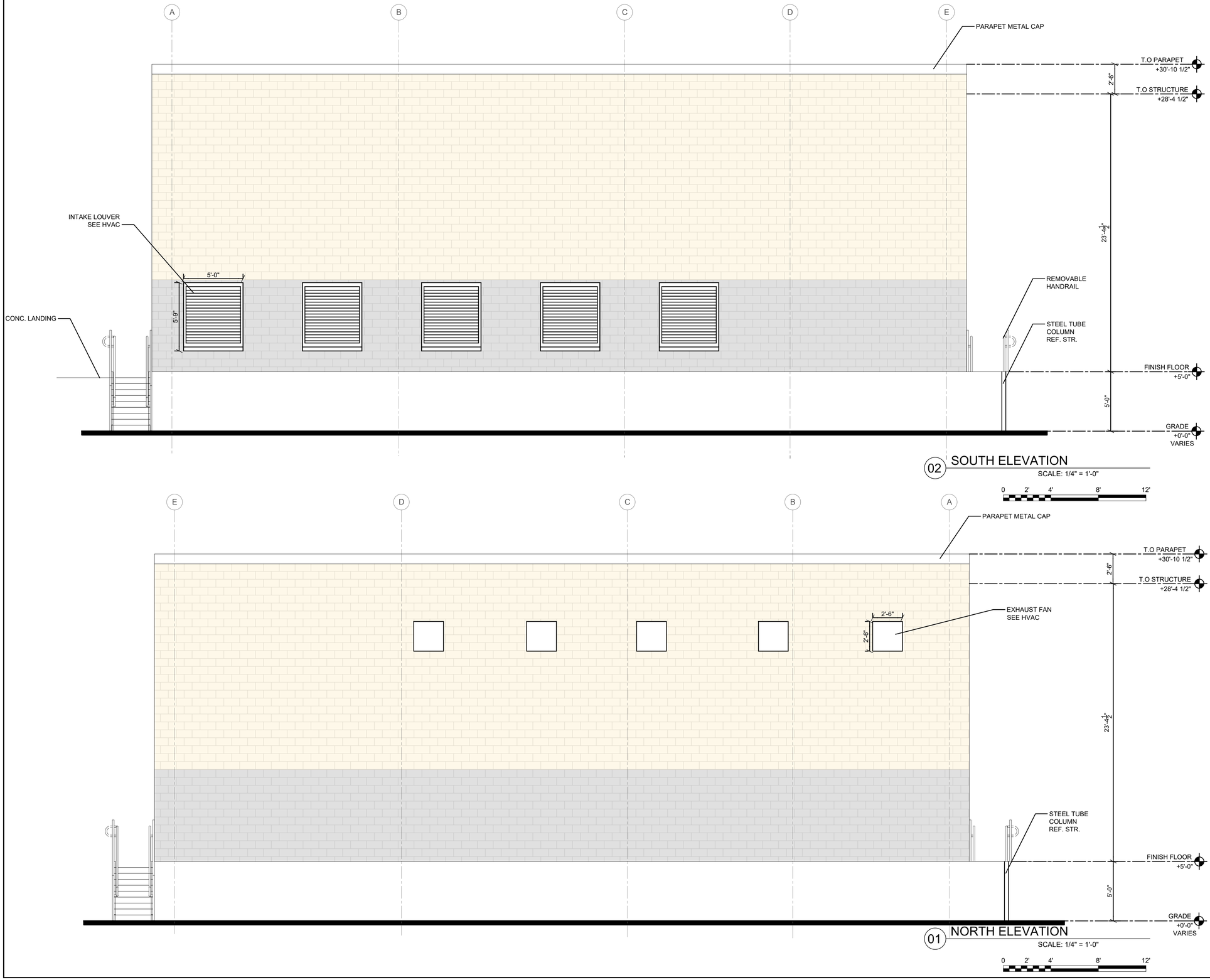

02 SOUTH ELEVATION

SCALE: 1/4" = 1'-0"

0 2' 4' 8' 12'

01 NORTH ELEVATION

SCALE: 1/4" = 1'-0"

0 2' 4' 8' 12'

NO.	DATE	REVISION	APP.

EJES INCORPORATED

CORPORATE OFFICE:
12801 N. CENTRAL EXPWY, SUITE 700,
DALLAS, TX 75243 TEL: 214-343-1210

HOUSTON OFFICE:
6161 SAVOY DRIVE, SUITE 830. HOUSTAN,
TX 77036
TEL: 281-272-1612M

MBROH 20 ENGINEERING
11757 KATY FWY,
SUITE 625
HOUSTON, TX 77077
713-468-2545

SURVEYED BY:

FB NO.

CITY OF HOUSTON

HOUSTON PUBLIC WORKS

WHITE OAKS WWTP IMPROVEMENTS

ARCHITECTURAL
BLOWER BUILDING ELEVATIONS

WBS NUMBER	FOR CITY OF HOUSTON USE ONLY
R-000265-0158-3	
DRAWING SCALE	
1/4"=1'-0"	
CITY OF HOUSTON PM	
SHAHIDUR RAHMAN, PE	
SHEET NO. 98 OF 189	

A-03

PLOTTED: 30/10/2026

FILE PATH: C:\Users\snajmusahar\DC\ACCDocs\MBROH ENGINEERING INC (HOUSTON)\White Oak Wastewater Treatment Plant Improvements\Project Files\08 Architectural\01 Sheets\A-03 Blower Building Elevations.dwg

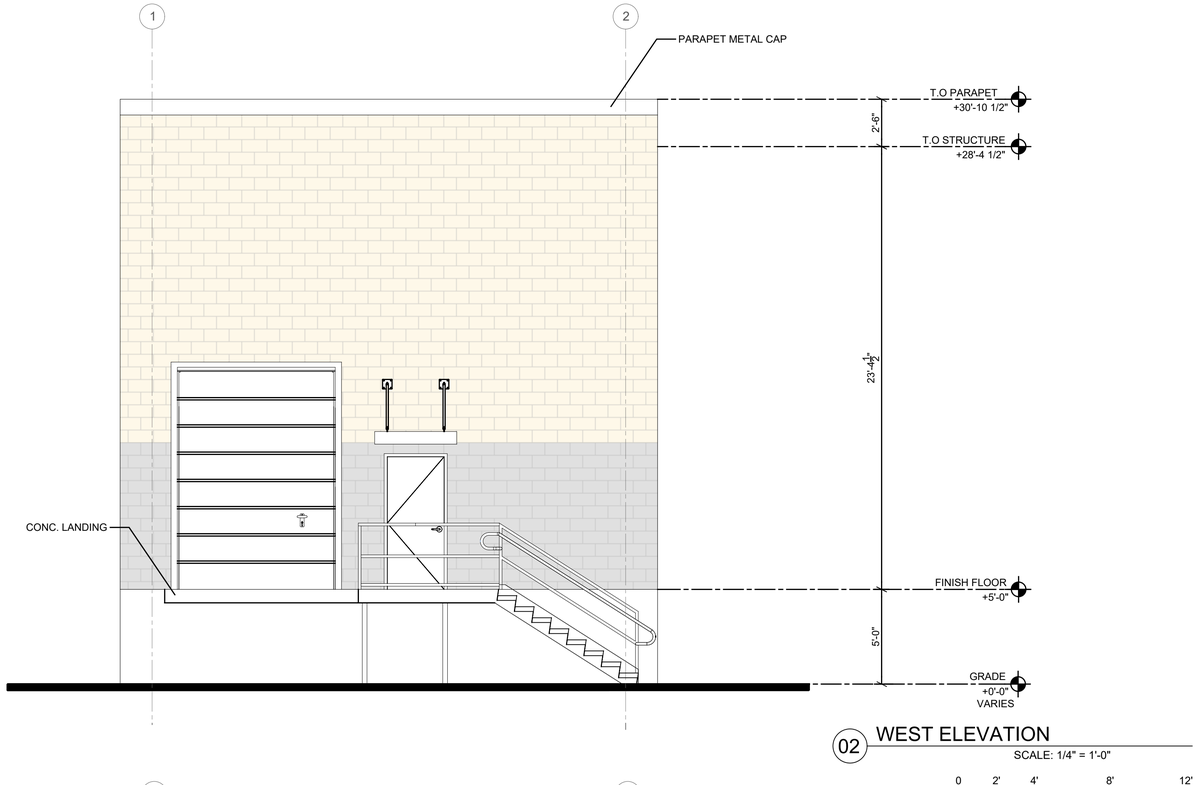

02 WEST ELEVATION

SCALE: 1/4" = 1'-0"

0 2' 4' 8' 12'

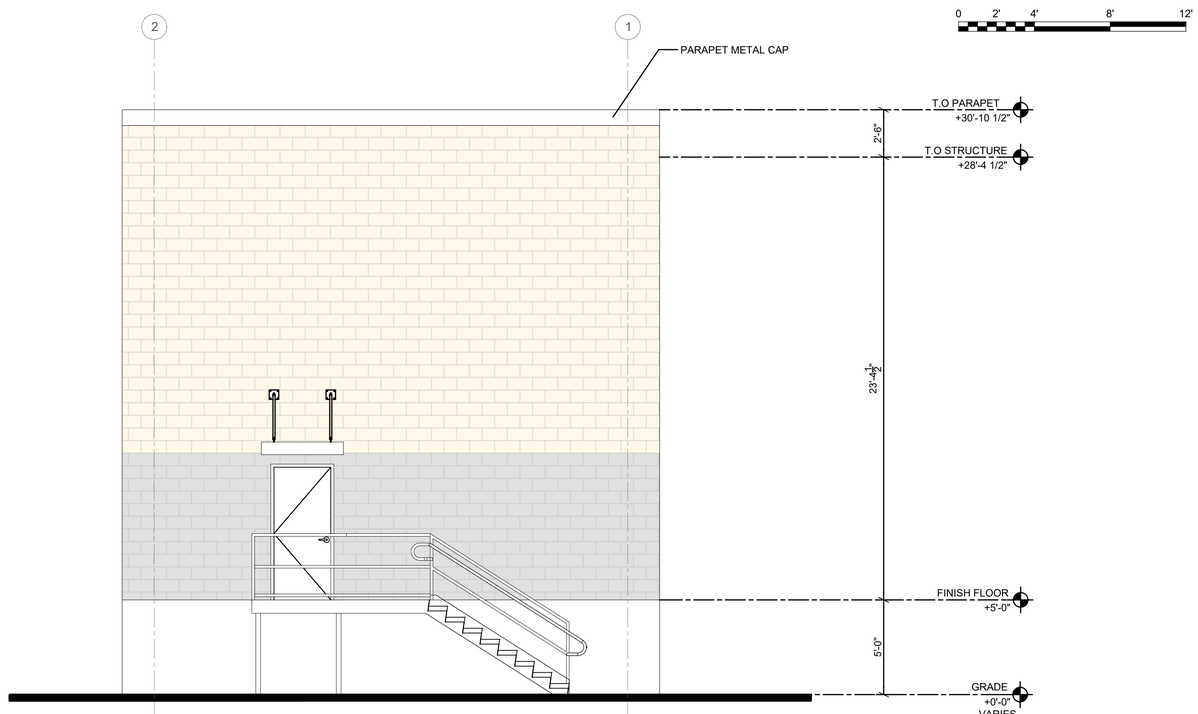

01 EAST ELEVATION

SCALE: 1/4" = 1'-0"

0 2' 4' 8' 12'

NO.	DATE	REVISION	APP.

EJES INCORPORATED
CORPORATE OFFICE:
12801 N. CENTRAL EXPWY, SUITE 700,
DALLAS, TX 75243 TEL: 214-343-1210
HOUSTON OFFICE:
6161 SAVOY DRIVE, SUITE 830. HOUSTAN, TX 77036
TEL: 281-272-1612M

MBROH ENGINEERING 20
11757 KATY FWY,
SUITE 625
HOUSTON, TX 77077
713-468-2545

SURVEYED BY:

FB NO.

CITY OF HOUSTON
HOUSTON PUBLIC WORKS

WHITE OAKS WWTP IMPROVEMENTS

ARCHITECTURAL
BLOWER BUILDING ELEVATIONS

WBS NUMBER	FOR CITY OF HOUSTON USE ONLY
R-000265-0158-3	
DRAWING SCALE	
1/4"=1'-0"	
CITY OF HOUSTON PM	
SHAHIDUR RAHMAN, PE	
SHEET NO. 99 OF 189	

A-04

PLOTTED: 30/10/2026

FILE PATH: C:\Users\snajmusahar\DC\ACCDocs\MBROH ENGINEERING INC (HOUSTON)\White Oak Wastewater Treatment Plant Improvements\Project Files\08 Architectural\01 Sheets\A-04 Blower Building Elevations.dwg

FILE PATH: C:\Users\snajmusahar\DC\ACCDocs\MBROH ENGINEERING INC (HOUSTON)\White Oak Wastewater Treatment Plant Improvements\Project Files\08 Architectural\01 Sheets\A-05 Blower Building Section.dwg
PLOTTED: 30/10/2026

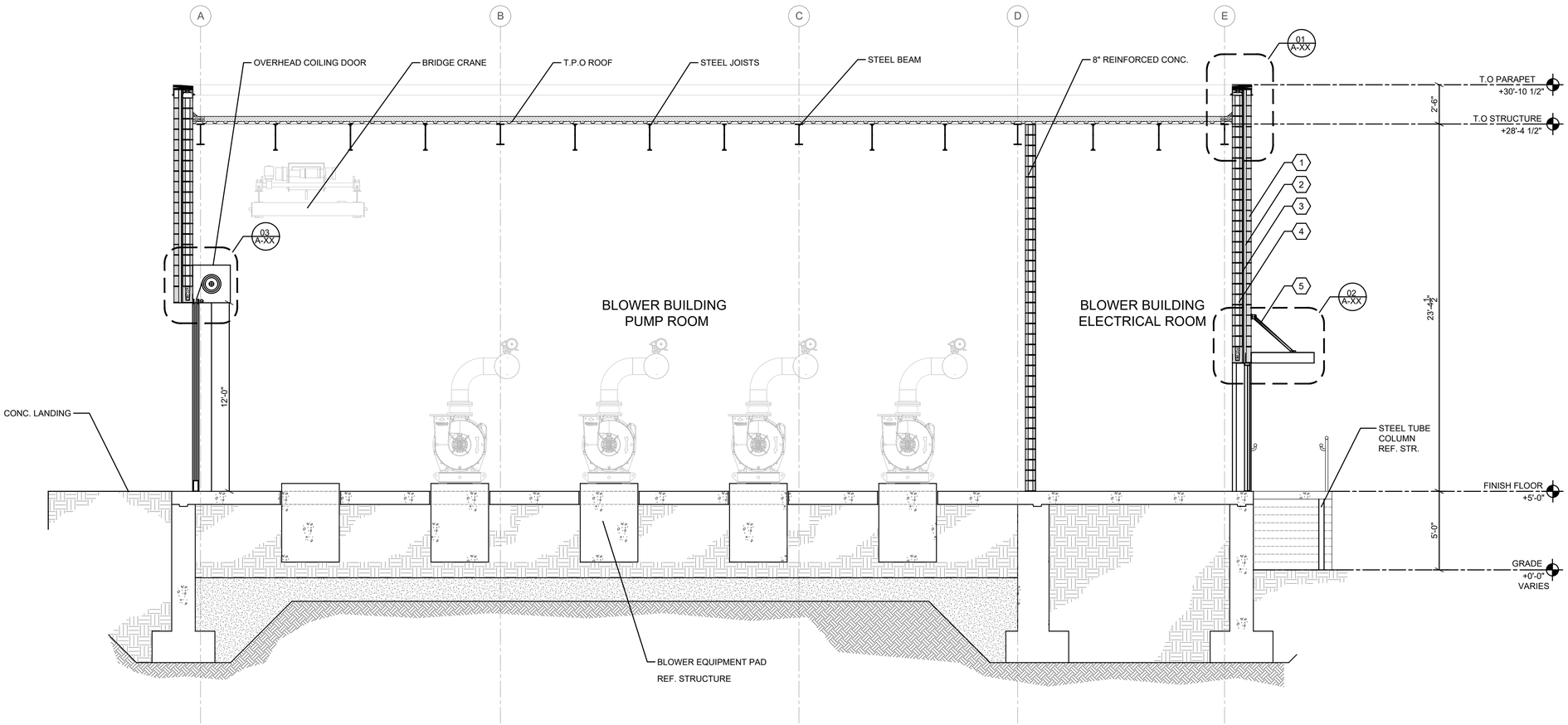

01 BLOWER BUILDING SECTION
SCALE: 1/4" = 1'-0"

0 2' 4' 8' 12'

NOTES BY SYMBOL " ⬡ ":

1. 3-5/8" SPLIT FACE CMU VENEER
2. 2" AIR CAVITY
3. 1" RIGID FOAM INSULATION IN CAVITY
4. 7-5/8" REINFORCED CMU WALL
5. PRE MANUFACTURED ALUMINUM AWNING

GENERAL NOTES

1. COORDINATE ALL BUILDING SECTION DIMENSIONS, ELEVATIONS, AND CONSTRUCTION ASSEMBLIES WITH STRUCTURAL, MECHANICAL, ELECTRICAL, PLUMBING, AND PROCESS DRAWINGS. REPORT DISCREPANCIES TO THE ARCHITECT PRIOR TO CONSTRUCTION.
2. VERIFY FINISH FLOOR, GRADE, EQUIPMENT PAD, AND FOUNDATION ELEVATIONS IN THE FIELD AND COORDINATE WITH CIVIL GRADING AND STRUCTURAL FOUNDATION DRAWINGS.
3. COORDINATE BLOWER EQUIPMENT PADS WITH EQUIPMENT MANUFACTURER REQUIREMENTS. VERIFY PAD SIZE, ELEVATION, HOUSEKEEPING CURB, ANCHOR BOLTS, VIBRATION ISOLATION, AND REQUIRED MAINTENANCE CLEARANCES PRIOR TO PLACEMENT.
4. MONORAIL, SUPPORT STEEL, AND ASSOCIATED STRUCTURAL CONNECTIONS SHALL BE COORDINATED WITH THE STRUCTURAL ENGINEER AND EQUIPMENT REQUIREMENTS. MAINTAIN REQUIRED LIFTING AND EQUIPMENT-REMOVAL CLEARANCES THROUGHOUT THE BLOWER ROOM.
5. PROVIDE CONTINUOUS ROOF AND WALL INSULATION AS INDICATED. SEAL ALL JOINTS, PENETRATIONS, AND TRANSITIONS TO MAINTAIN CONTINUITY OF THE THERMAL AND MOISTURE-CONTROL ENVELOPE.
6. ALL EXTERIOR WALL, ROOF, LOUVER, DOOR, AND PENETRATION CONDITIONS SHALL BE WEATHER-TIGHT. PROVIDE FLASHING, COUNTERFLASHING, SEALANTS, CLOSURES, AND WATERPROOFING ACCESSORIES AS REQUIRED.
7. COORDINATE OVERHEAD COILING DOOR HEAD, JAMB, TRACK, MOTOR, AND SUPPORT CONDITIONS WITH STRUCTURE. MAINTAIN REQUIRED CLEARANCES FROM THE MONORAIL, PIPING, DUCTWORK, LIGHTING, AND OTHER OVERHEAD SYSTEMS.
8. PROVIDE CORROSION-RESISTANT MATERIALS, FASTENERS, FRAMES, ACCESSORIES, AND COATINGS SUITABLE FOR THE HUMID AND POTENTIALLY CORROSIVE WASTEWATER-TREATMENT ENVIRONMENT.
9. ELECTRICAL ROOM SHALL BE SEPARATED FROM THE BLOWER ROOM AS INDICATED. COORDINATE WALL CONSTRUCTION, PENETRATIONS, DOOR RATINGS WHERE REQUIRED, EQUIPMENT CLEARANCES, AND ENVIRONMENTAL CONDITIONING WITH ELECTRICAL AND MECHANICAL REQUIREMENTS.
10. COORDINATE HVAC EQUIPMENT, LOUVERS, AND OTHER MECHANICAL OPENINGS WITH ARCHITECTURAL WALL CONSTRUCTION. PROVIDE STRUCTURAL FRAMING, FLASHING, INSULATION, AND SEALANT AROUND ALL OPENINGS.
11. PROVIDE SEALED CONCRETE INDUSTRIAL-GRADE FLOOR FINISHES THROUGHOUT EQUIPMENT AND ACCESS AREAS.
12. COORDINATE FLOOR SLOPES, TRENCHING, DRAINS, HOUSEKEEPING PADS, AND TRANSITIONS TO PREVENT PONDING AND MAINTAIN SAFE ACCESS.
13. MAINTAIN REQUIRED PERSONNEL ACCESS, EGRESS, AND EQUIPMENT-REMOVAL PATHS.
14. STAIRS, LANDINGS, DOORS, PLATFORMS, HANDRAILS, AND GUARDS SHALL COMPLY WITH APPLICABLE CODE REQUIREMENTS AND SHALL REMAIN UNOBSTRUCTED BY EQUIPMENT OR BUILDING SYSTEMS.

NO.	DATE	REVISION	APP.

EJES INCORPORATED
CORPORATE OFFICE:
12801 N. CENTRAL EXPWY, SUITE 700,
DALLAS, TX 75243 TEL: 214-343-1210
HOUSTON OFFICE:
6161 SAVOY DRIVE, SUITE 830. HOUSTAN, TX 77036
TEL: 281-272-1612M

MBROH ENGINEERING
11757 KATY FWY,
SUITE 625
HOUSTON, TX 77077
713-468-2545

SURVEYED BY:
FB NO.

CITY OF HOUSTON
HOUSTON PUBLIC WORKS

WHITE OAKS WWTP IMPROVEMENTS

ARCHITECTURAL
BLOWER BUILDING SECTION

WBS NUMBER	FOR CITY OF HOUSTON USE ONLY
R-000265-0158-3	
DRAWING SCALE	
1/4"=1'-0"	
CITY OF HOUSTON PM	
SHAHIDUR RAHMAN, PE	

A-05 SHEET NO. 100 OF 189

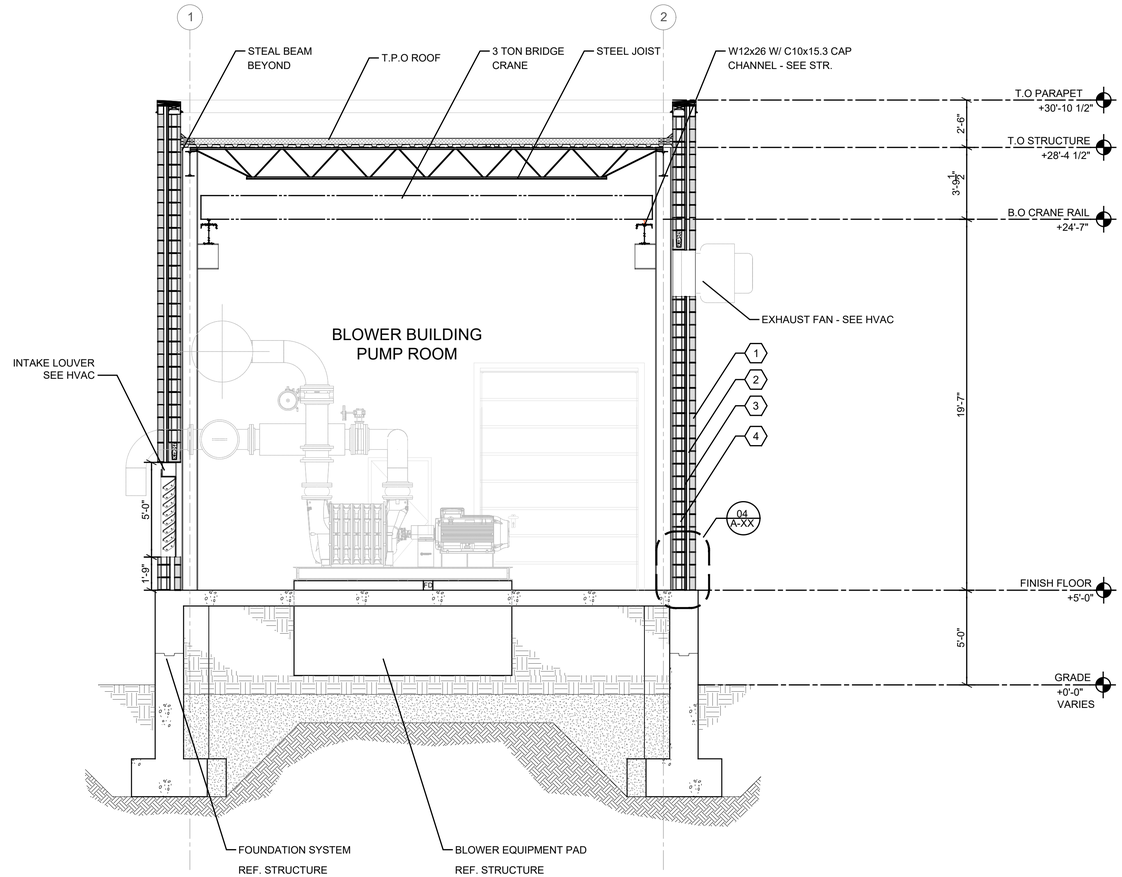

01 BLOWER BUILDING SECTION

SCALE: 1/4" = 1'-0"

0 2' 4' 8' 12'

NOTES BY SYMBOL " ⬡ ":

1. 3-5/8" SPLIT FACE CMU VENEER
2. 2" AIR CAVITY
3. 1" RIGID FOAM INSULATION IN CAVITY
4. 7-5/8" REINFORCED CMU WALL

GENERAL NOTES

1. COORDINATE ALL BUILDING SECTION DIMENSIONS, ELEVATIONS, AND CONSTRUCTION ASSEMBLIES WITH STRUCTURAL, MECHANICAL, ELECTRICAL, PLUMBING, AND PROCESS DRAWINGS. REPORT DISCREPANCIES TO THE ARCHITECT PRIOR TO CONSTRUCTION.
2. VERIFY FINISH FLOOR, GRADE, EQUIPMENT PAD, AND FOUNDATION ELEVATIONS IN THE FIELD AND COORDINATE WITH CIVIL GRADING AND STRUCTURAL FOUNDATION DRAWINGS.
3. COORDINATE BLOWER EQUIPMENT PADS WITH EQUIPMENT MANUFACTURER REQUIREMENTS. VERIFY PAD SIZE, ELEVATION, HOUSEKEEPING CURB, ANCHOR BOLTS, VIBRATION ISOLATION, AND REQUIRED MAINTENANCE CLEARANCES PRIOR TO PLACEMENT.
4. MONORAIL, SUPPORT STEEL, AND ASSOCIATED STRUCTURAL CONNECTIONS SHALL BE COORDINATED WITH THE STRUCTURAL ENGINEER AND EQUIPMENT REQUIREMENTS. MAINTAIN REQUIRED LIFTING AND EQUIPMENT-REMOVAL CLEARANCES THROUGHOUT THE BLOWER ROOM.
5. PROVIDE CONTINUOUS ROOF AND WALL INSULATION AS INDICATED. SEAL ALL JOINTS, PENETRATIONS, AND TRANSITIONS TO MAINTAIN CONTINUITY OF THE THERMAL AND MOISTURE-CONTROL ENVELOPE.
6. ALL EXTERIOR WALL, ROOF, LOUVER, DOOR, AND PENETRATION CONDITIONS SHALL BE WEATHER-TIGHT. PROVIDE FLASHING, COUNTERFLASHING, SEALANTS, CLOSURES, AND WATERPROOFING ACCESSORIES AS REQUIRED.
7. COORDINATE OVERHEAD COILING DOOR HEAD, JAMB, TRACK, MOTOR, AND SUPPORT CONDITIONS WITH STRUCTURE. MAINTAIN REQUIRED CLEARANCES FROM THE MONORAIL, PIPING, DUCTWORK, LIGHTING, AND OTHER OVERHEAD SYSTEMS.
8. PROVIDE CORROSION-RESISTANT MATERIALS, FASTENERS, FRAMES, ACCESSORIES, AND COATINGS SUITABLE FOR THE HUMID AND POTENTIALLY CORROSIVE WASTEWATER-TREATMENT ENVIRONMENT.
9. ELECTRICAL ROOM SHALL BE SEPARATED FROM THE BLOWER ROOM AS INDICATED. COORDINATE WALL CONSTRUCTION, PENETRATIONS, DOOR RATINGS WHERE REQUIRED, EQUIPMENT CLEARANCES, AND ENVIRONMENTAL CONDITIONING WITH ELECTRICAL AND MECHANICAL REQUIREMENTS.
10. COORDINATE HVAC EQUIPMENT, LOUVERS, AND OTHER MECHANICAL OPENINGS WITH ARCHITECTURAL WALL CONSTRUCTION. PROVIDE STRUCTURAL FRAMING, FLASHING, INSULATION, AND SEALANT AROUND ALL OPENINGS.
11. PROVIDE SEALED CONCRETE INDUSTRIAL-GRADE FLOOR FINISHES THROUGHOUT EQUIPMENT AND ACCESS AREAS.
12. COORDINATE FLOOR SLOPES, TRENCHING, DRAINS, HOUSEKEEPING PADS, AND TRANSITIONS TO PREVENT PONDING AND MAINTAIN SAFE ACCESS.
13. MAINTAIN REQUIRED PERSONNEL ACCESS, EGRESS, AND EQUIPMENT-REMOVAL PATHS.
14. STAIRS, LANDINGS, DOORS, PLATFORMS, HANDRAILS, AND GUARDS SHALL COMPLY WITH APPLICABLE CODE REQUIREMENTS AND SHALL REMAIN UNOBSTRUCTED BY EQUIPMENT OR BUILDING SYSTEMS.

NO.	DATE	REVISION	APP.

EJES INCORPORATED
CORPORATE OFFICE:
12801 N. CENTRAL EXPWY, SUITE 700,
DALLAS, TX 75243 TEL: 214-343-1210
HOUSTON OFFICE:
8161 SAVOY DRIVE, SUITE 830. HOUSTAN,
TX 77036
TEL: 281-272-1612M

MBROH 20 ENGINEERING
11757 KATY FWY,
SUITE 625
HOUSTON, TX 77077
713-468-2545

SURVEYED BY:
FB NO.

CITY OF HOUSTON
HOUSTON PUBLIC WORKS

WHITE OAKS WWTP IMPROVEMENTS

ARCHITECTURAL
BLOWER BUILDING SECTION

WBS NUMBER	FOR CITY OF HOUSTON USE ONLY
R-000265-0158-3	
DRAWING SCALE	
1/4"=1'-0"	
CITY OF HOUSTON PM	
SHAHIDUR RAHMAN, PE	
SHEET NO. 101 OF 189	

A-06

FILE PATH: C:\Users\snajmusahar\DC\ACCDocs\MBROH ENGINEERING INC (HOUSTON)\White Oak Wastewater Treatment Plant Improvements\Project Files\08 Architectural\01 Sheets\A-06 Blower Building Section.dwg
PLOTTED: 30/10/2026

FILE PATH: C:\Users\snajmusahar\DC\ACCDocs\MBROH ENGINEERING INC (HOUSTON)\White Oak Wastewater Treatment Plant Improvements\Project Files\08 Architectural\01 Sheets\A-07 Blower Building ROOF Plan.dwg
PLOTTED: 30/10/2026

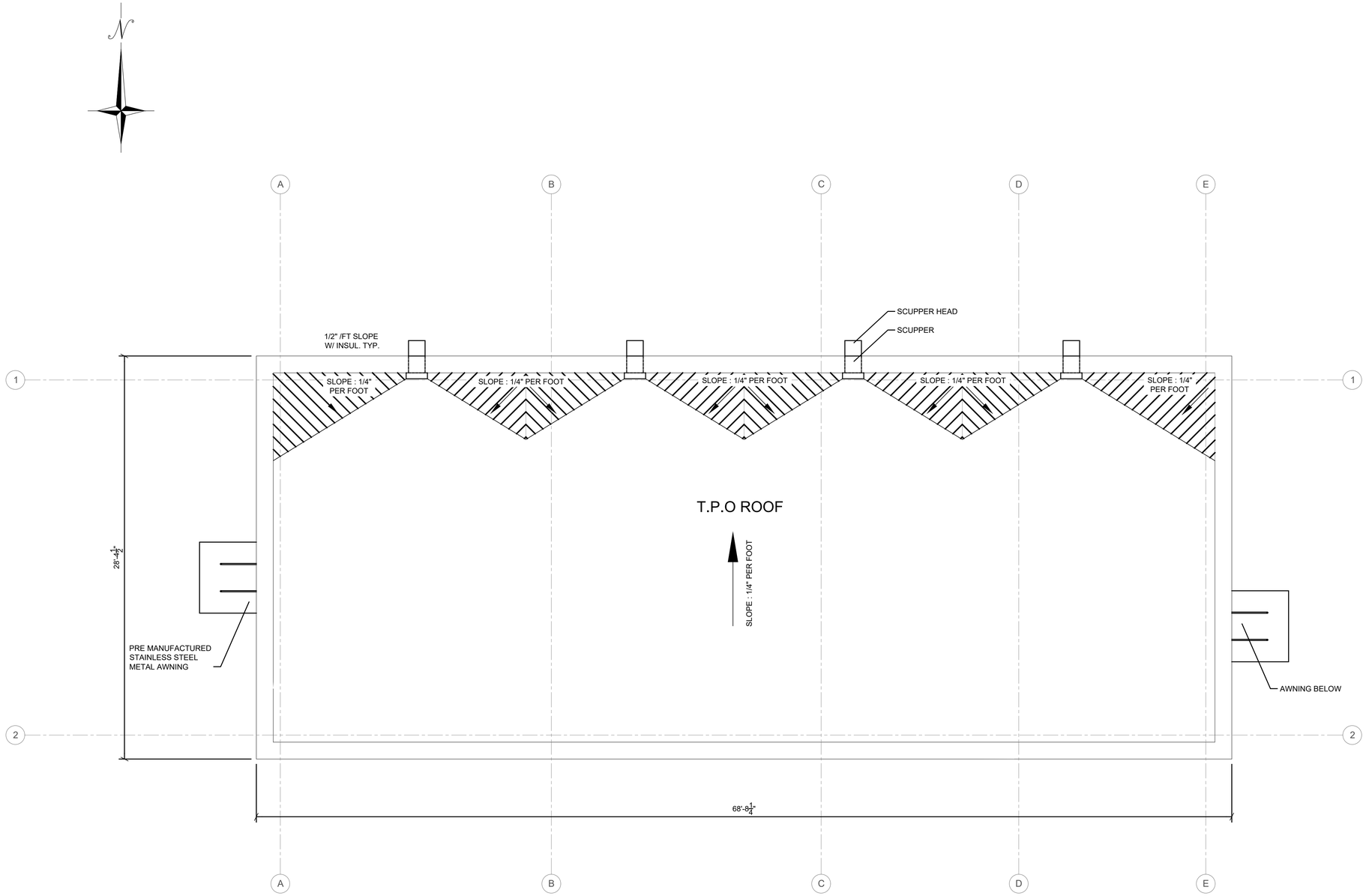

01 BLOWER BUILDING ROOF PLAN
SCALE: 1/4" = 1'-0"

0 2' 4' 8' 12'

GENERAL NOTES

1. PROVIDE MECHANICALLY ATTACHED TPO SINGLE-PLY ROOFING MEMBRANE SYSTEM, INCLUDING MEMBRANE, COVER BOARD WHERE REQUIRED, INSULATION, FASTENERS, ADHESIVES, FLASHING, ACCESSORIES, AND TERMINATIONS, COMPLETE AND WATERTIGHT. ROOFING SYSTEM SHALL BE INSTALLED IN ACCORDANCE WITH ROOFING MANUFACTURER'S WRITTEN REQUIREMENTS.
2. PROVIDE MINIMUM ROOF SLOPE OF 1/4 INCH PER FOOT (2%) TOWARD ROOF SCUPPERS. VERIFY POSITIVE DRAINAGE THROUGHOUT ROOF AREA. PONDING WATER WILL NOT BE ACCEPTABLE.
3. FORM REQUIRED ROOF SLOPES USING TAPERED RIGID EPS ROOF INSULATION INSTALLED OVER THE METAL ROOF DECK. COORDINATE INSULATION THICKNESSES, CRICKETS, SADDLES, AND TRANSITIONS TO MAINTAIN CONTINUOUS POSITIVE DRAINAGE TO EACH SCUPPER.
4. ROOF STRUCTURE ASSEMBLY IS SUPPORTED ON METAL ROOF DECK OVER OPEN-WEB STEEL JOISTS. COORDINATE ROOFING ATTACHMENT REQUIREMENTS WITH STRUCTURAL DRAWINGS AND ROOFING MANUFACTURER'S TESTED ASSEMBLY. DO NOT CUT, DRILL, OR MODIFY ROOF JOISTS WITHOUT STRUCTURAL ENGINEER APPROVAL.
5. INSULATION ATTACHMENT: MECHANICALLY FASTEN ROOF INSULATION TO METAL DECK IN ACCORDANCE WITH THE ROOFING MANUFACTURER'S APPROVED SYSTEM AND APPLICABLE WIND-UPLIFT REQUIREMENTS. PROVIDE INCREASED FASTENING DENSITY AT ROOF CORNERS AND PERIMETER ZONES WHERE REQUIRED.
6. PROVIDE THROUGH-WALL ROOF SCUPPERS AT LOCATIONS INDICATED ON THE ROOF PLAN. SET SCUPPER OPENINGS LOW ENOUGH TO RECEIVE POSITIVE ROOF DRAINAGE. FULLY FLASH SCUPPERS INTO THE TPO MEMBRANE SYSTEM IN ACCORDANCE WITH ROOFING MANUFACTURER'S STANDARD DETAILS.
7. PROVIDE EXTERIOR CONDUCTOR HEADS DIRECTLY BELOW ROOF SCUPPERS. SIZE CONDUCTOR HEADS TO RECEIVE THE FULL SCUPPER DISCHARGE WITHOUT OVERFLOW UNDER DESIGN RAINFALL CONDITIONS. COORDINATE DIMENSIONS AND INSTALLATION WITH EXTERIOR WALL CONSTRUCTION.
8. DOWNSPOUTS: PROVIDE DOWNSPOUTS CONNECTED TO CONDUCTOR HEADS AT LOCATIONS INDICATED. SECURE DOWNSPOUTS TO EXTERIOR WALLS WITH CORROSION-RESISTANT STRAPS AND FASTENERS. COORDINATE DISCHARGE CONNECTION OR TERMINATION WITH CIVIL DRAWINGS AND SITE DRAINAGE REQUIREMENTS.
9. WHERE REQUIRED BY APPLICABLE CODE, PROVIDE SECONDARY/OVERFLOW SCUPPERS OR OTHER APPROVED EMERGENCY OVERFLOW DRAINAGE. LOCATE OVERFLOW OPENINGS ABOVE THE PRIMARY DRAINAGE ELEVATION AND COORDINATE REQUIRED ELEVATION WITH PLUMBING DESIGN.
10. PROVIDE MANUFACTURER-APPROVED TPO FLASHING AT ALL ROOF PENETRATIONS, CURBS, PARAPETS, WALLS, SCUPPERS, EQUIPMENT SUPPORTS, AND OTHER INTERRUPTIONS OF THE ROOFING MEMBRANE. FIELD-FABRICATED FLASHING SHALL COMPLY WITH ROOFING MANUFACTURER REQUIREMENTS.
11. COORDINATE ALL ROOF PENETRATIONS WITH MECHANICAL, ELECTRICAL, PLUMBING, AND STRUCTURAL DRAWINGS PRIOR TO ROOFING INSTALLATION. MINIMIZE PENETRATIONS WHERE POSSIBLE. PENETRATIONS SHALL NOT OCCUR THROUGH ROOF VALLEYS, DRAINAGE PATHS, OR IMMEDIATELY ADJACENT TO SCUPPERS UNLESS SPECIFICALLY DETAILED.
12. REFER TO ROOF DETAILS ON SHEET A-05 FOR TYPICAL ROOF PARAPET, SCUPPER, CONDUCTOR HEAD, DOWNSPOUT, FLASHING, INSULATION, AND ROOF ASSEMBLY REQUIREMENTS. WHERE CONFLICTS OCCUR BETWEEN TYPICAL DETAILS AND MANUFACTURER REQUIREMENTS, NOTIFY ARCHITECT PRIOR TO PROCEEDING.

NO.	DATE	REVISION	APP.

EJES INCORPORATED
CORPORATE OFFICE:
12801 N. CENTRAL EXPWY, SUITE 700,
DALLAS, TX 75243 TEL: 214-343-1210
HOUSTON OFFICE:
6161 SAVOY DRIVE, SUITE 830. HOUSTAN, TX 77036
TEL: 281-272-1612M

MBROH ENGINEERING
11757 KATY FWY,
SUITE 625
HOUSTON, TX 77077
713-468-2545

SURVEYED BY:
FB NO.

CITY OF HOUSTON
HOUSTON PUBLIC WORKS

WHITE OAKS WWTP IMPROVEMENTS

ARCHITECTURAL
BLOWER BUILDING ROOF PLAN

WBS NUMBER	FOR CITY OF HOUSTON USE ONLY
R-000265-0158-3	
DRAWING SCALE	
1/4"=1'-0"	
CITY OF HOUSTON PM	
SHAHIDUR RAHMAN, PE	
SHEET NO. 102 OF 189	

A-07

FILE PATH: C:\Users\snajmusahar\DC\ACCDocs\MBROH ENGINEERING INC (HOUSTON)\White Oak Wastewater Treatment Plant Improvements\Project Files\08 Architectural\01 Sheets\A-08 Blower Building RCP.dwg
PLOTTED: 30/10/2026
PLOT STAMPED BY: Najmus Sahar
PLOT SCALE: 1.00 '= 1.00 '
PLOT STYLE TABLE: ERO-Default.ctb

NO.	DATE	REVISION	APP.

RCP LEGEND

PETROLUX LED LOW BAY PENDANT LIGHT	A
HZL1D LED SUSPENDED STRIP LIGHT	

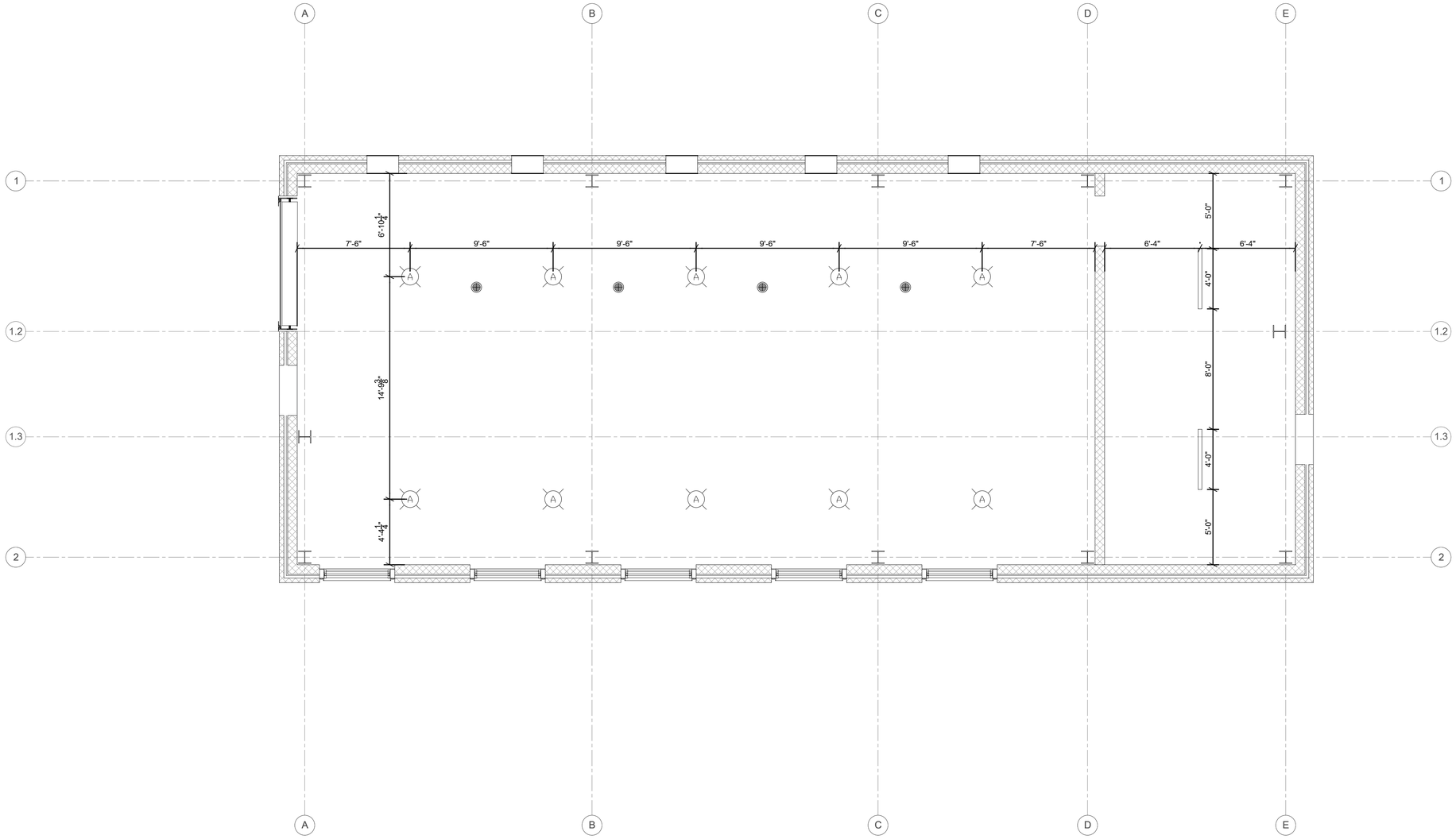

01 BLOWER BUILDING REFLECTED CEILING PLAN

SCALE: 1/4" = 1'-0"

0 2' 4' 8' 12'

EJES INCORPORATED
CORPORATE OFFICE:
12801 N. CENTRAL EXPWY, SUITE 700,
DALLAS, TX 75243 TEL: 214-343-1210
HOUSTON OFFICE:
8161 SAVOY DRIVE, SUITE 830. HOUSTAN,
TX 77036
TEL: 281-272-1612M

MBROH ENGINEERING
11757 KATY FWY,
SUITE 625
HOUSTON, TX 77077
713-468-2545

SURVEYED BY:

FB NO.

CITY OF HOUSTON
HOUSTON PUBLIC WORKS

WHITE OAKS WWTP IMPROVEMENTS

ARCHITECTURAL
BLOWER BUILDING REFLECTED CEILING PLAN

WBS NUMBER	FOR CITY OF HOUSTON USE ONLY
R-000265-0158-3	
DRAWING SCALE	
1/4"=1'-0"	
CITY OF HOUSTON PM	
SHAHIDUR RAHMAN, PE	
SHEET NO. 103 OF 189	

A-08

FILE PATH: C:\Users\snojmusahar\DC\ACCDocs\MBROH ENGINEERING INC (HOUSTON)\White Oak Wastewater Treatment Plant Improvements\Project Files\08 Architectural\01 Sheets\A-09 Roof Details.dwg PLOTTED: 30/10/2026
PLOTSTYLE: Coh_plot.ctb

NO.	DATE	REVISION	APP.

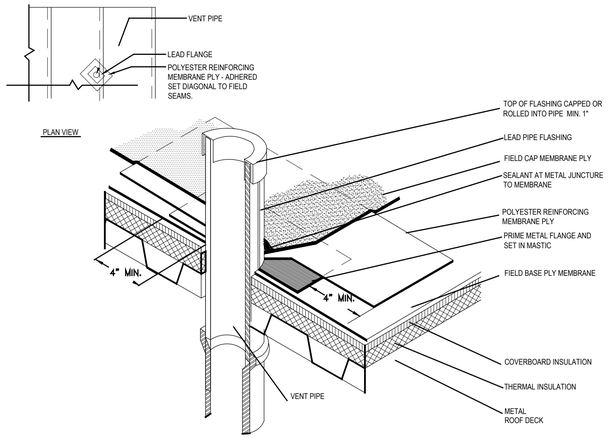

07 **VENT THROUGH ROOF (VTR) DETAIL**
SCALE : NOT TO SCALE

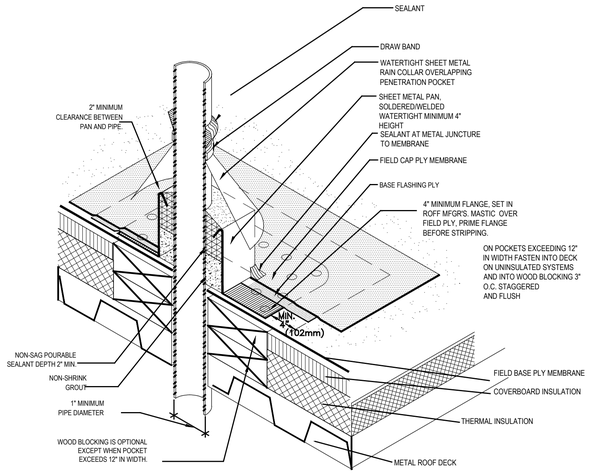

06 **PIPE PENETRATION / SUPPORT DETAIL**
SCALE : NOT TO SCALE

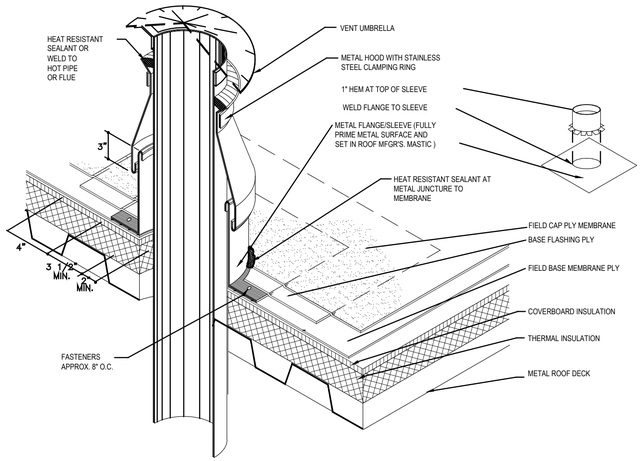

05 **HOT PIPE ROOF PENETRATION DETAIL**
SCALE : NOT TO SCALE

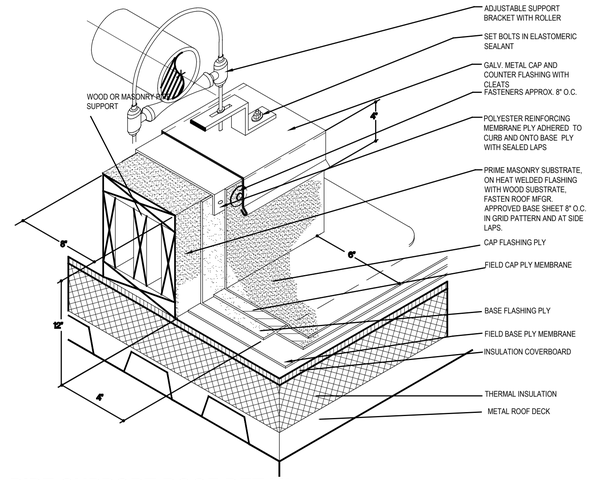

04 **PIPE SUPPORT ROOF DETAIL**
SCALE : NOT TO SCALE

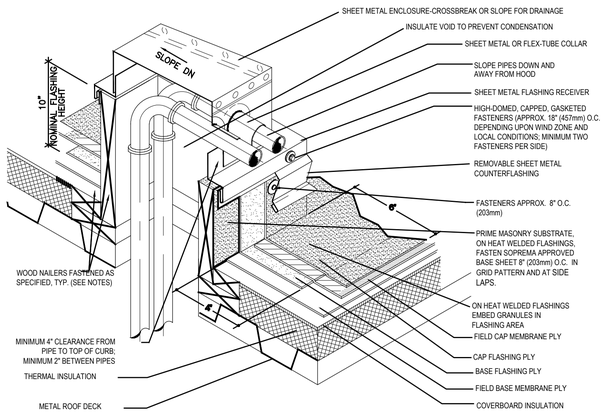

03 **ROOF AC LINES PENETRATION DETAIL**
SCALE : NOT TO SCALE

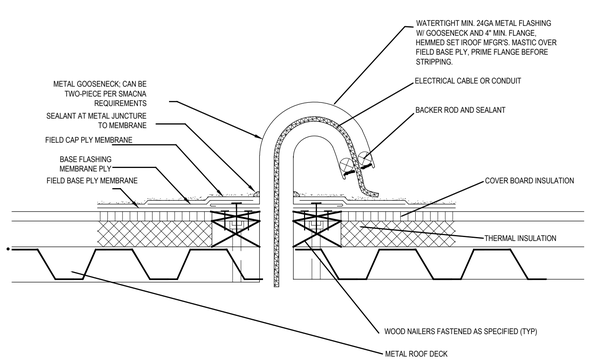

02 **ELECT. LINE ROOF PENETRATION DETAIL**
SCALE : NOT TO SCALE

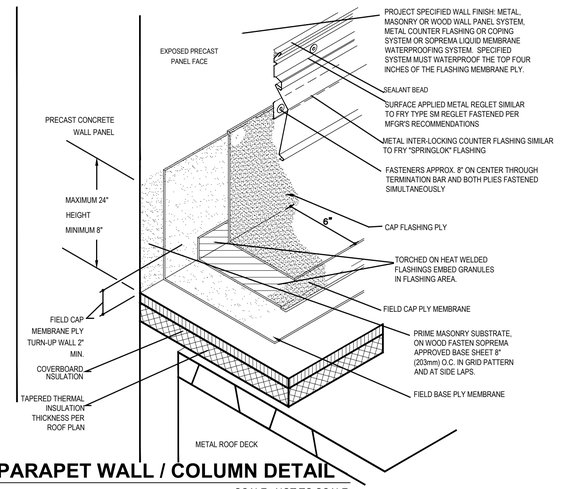

01 **PARAPET WALL / COLUMN DETAIL**
SCALE : NOT TO SCALE

EJES INCORPORATED
CORPORATE OFFICE:
12801 N. CENTRAL EXPWY, SUITE 700,
DALLAS, TX 75243 TEL: 214-343-1210
HOUSTON OFFICE:
8161 SAVOY DRIVE, SUITE 830. HOUSTAN, TX 77036
TEL: 281-272-1612M

MBROH 20 ENGINEERING
11757 KATY FWY,
SUITE 625
HOUSTON, TX 77077
713-468-2545

SURVEYED BY:
FB NO.

CITY OF HOUSTON
HOUSTON PUBLIC WORKS

WHITE OAKS WWTP IMPROVEMENTS

ARCHITECTURAL
ROOF DETAILS

WBS NUMBER	FOR CITY OF HOUSTON USE ONLY
R-000265-0158-3	
DRAWING SCALE	
NTS	
CITY OF HOUSTON PM	
SHAHIDUR RAHMAN, PE	

A-09 SHEET NO. 104 OF 189

FILE PATH: C:\Users\snajmusahar\DC\ACCDocs\MBROH ENGINEERING INC (HOUSTON)\White Oak Wastewater Treatment Plant Improvements\Project Files\08 Architectural\01 Sheets\A-10 Roof Details.dwg
PLOTTED: 30/10/2026
PLOTTED BY: Coh_plot.ctb

NO.	DATE	REVISION	APP.

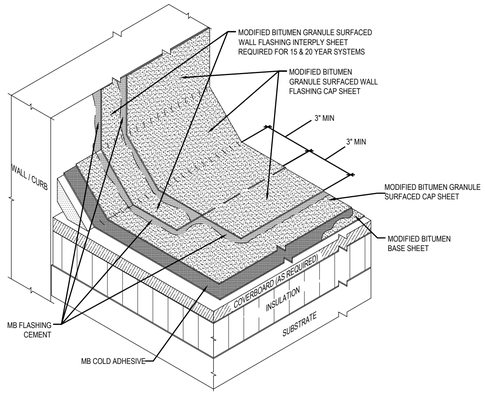

06 BASE TIE-IN - MB COLD ADHESIVE APPLIED

SCALE : NOT TO SCALE

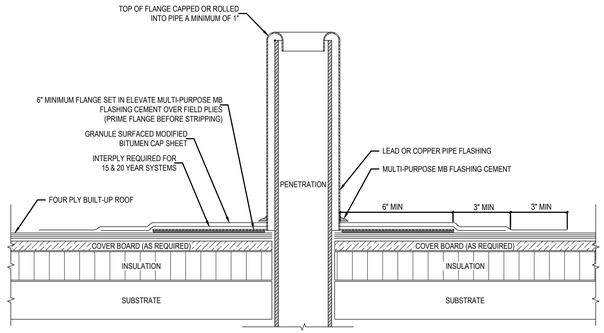

05 PLUMBING VENT

SCALE : NOT TO SCALE

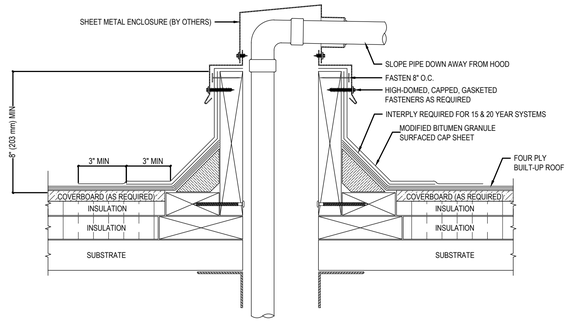

04 SHEET METAL ENCLOSURE FOR PIPING THROUGH ROOF DECK

SCALE : NOT TO SCALE

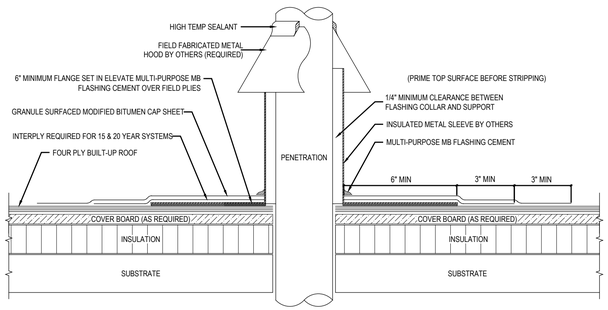

03 HOT STACK FLASHING

SCALE : NOT TO SCALE

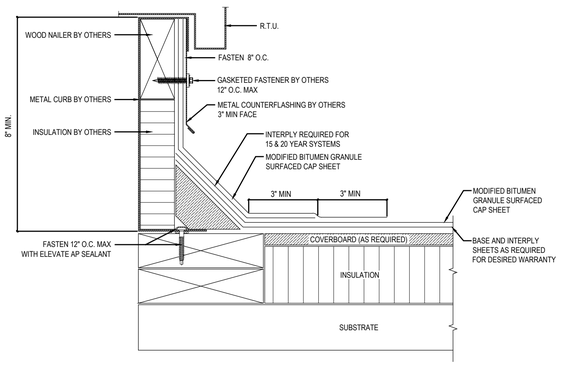

02 PREFABRICATED METAL CURB

SCALE : NOT TO SCALE

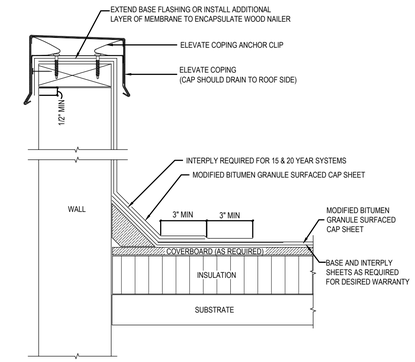

01 METAL COPING CAP AND BASE FLASHING

SCALE : NOT TO SCALE

EJES INCORPORATED
CORPORATE OFFICE:
12801 N. CENTRAL EXPWY, SUITE 700,
DALLAS, TX 75243 TEL: 214-343-1210
HOUSTON OFFICE:
8161 SAVOY DRIVE, SUITE 830. HOUSTAN,
TX 77036
TEL: 281-272-1612M

MBROH 20 ENGINEERING
11757 KATY FWY,
SUITE 625
HOUSTON, TX 77077
713-468-2545

SURVEYED BY:
FB NO.

CITY OF HOUSTON
HOUSTON PUBLIC WORKS

WHITE OAKS WWTP IMPROVEMENTS

ARCHITECTURAL
ROOF DETAILS

WBS NUMBER	FOR CITY OF HOUSTON USE ONLY
R-000265-0158-3	
DRAWING SCALE	
NTS	
CITY OF HOUSTON PM	
SHAHIDUR RAHMAN, PE	

A-10

SHEET NO. 105 OF 189

FILE PATH: C:\Users\snajmusahar\DC\ACCDocs\MBROH ENGINEERING INC (HOUSTON)\White Oak Wastewater Treatment Plant Improvements\Project Files\08 Architectural\01 Sheets\A-11 Analyzer Building Floor Plan.dwg
PLOTTED: 30/10/2026

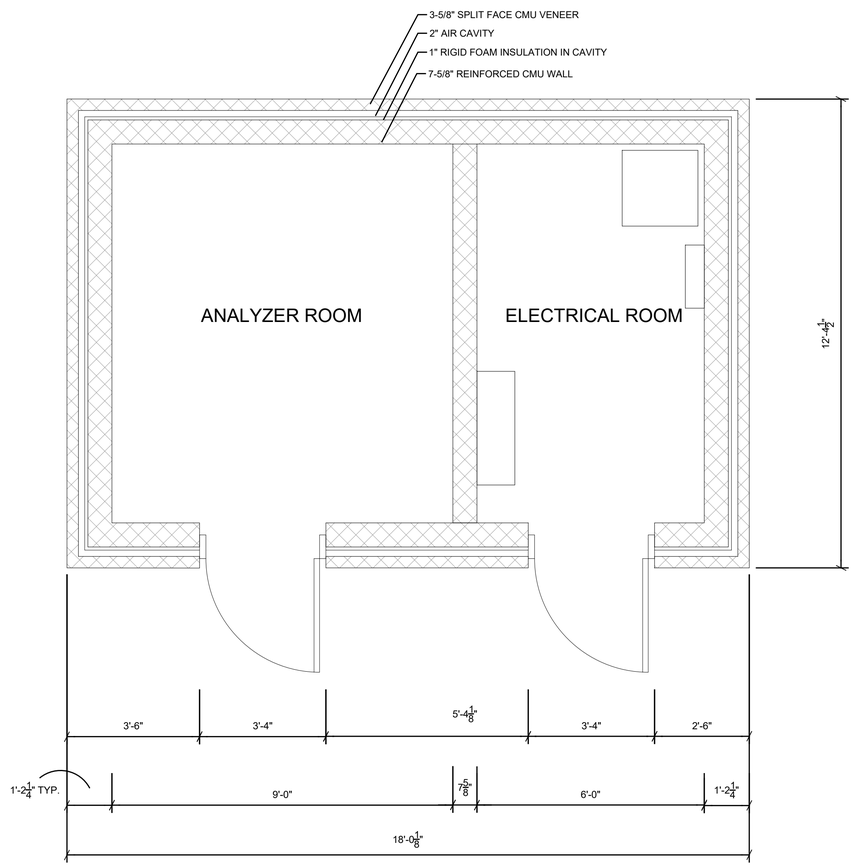

01 ANALYZER BUILDING FLOOR PLAN
SCALE: 1/2" = 1'-0"

0 1' 2' 4' 6'

GENERAL NOTES

1. ALL DIMENSIONS SHALL BE VERIFIED IN THE FIELD PRIOR TO CONSTRUCTION. NOTIFY THE ARCHITECT OF ANY DISCREPANCIES BEFORE PROCEEDING WITH THE WORK.
2. DO NOT SCALE DRAWINGS. USE WRITTEN DIMENSIONS AND ELEVATIONS ONLY. WHERE DIMENSIONS ARE UNCLEAR OR MISSING, CONTACT THE ARCHITECT FOR CLARIFICATION.
3. COORDINATE ALL ARCHITECTURAL WORK WITH STRUCTURAL, MECHANICAL, ELECTRICAL, PLUMBING, PROCESS, AND EQUIPMENT DRAWINGS PRIOR TO FABRICATION OR INSTALLATION.
4. MAINTAIN REQUIRED CLEARANCES AROUND BLOWERS, PUMPS, ELECTRICAL EQUIPMENT, PANELS, AND OTHER PROCESS EQUIPMENT IN ACCORDANCE WITH MANUFACTURER REQUIREMENTS, APPLICABLE CODES, AND MAINTENANCE/ACCESS REQUIREMENTS.
5. PROVIDE ALL WALL, FLOOR, AND ROOF OPENINGS REQUIRED FOR DUCTS, PIPING, CONDUITS, LOUVERS, AND PROCESS EQUIPMENT. COORDINATE SIZES AND LOCATIONS WITH THE RESPECTIVE DISCIPLINES PRIOR TO CONSTRUCTION.
6. SEAL ALL PENETRATIONS THROUGH EXTERIOR WALLS, ROOF, AND FLOOR ASSEMBLIES TO PROVIDE A WEATHER-TIGHT AND WATERTIGHT INSTALLATION. PROVIDE FLASHING, SEALANT, SLEEVES, AND ACCESSORIES AS REQUIRED.
7. PROVIDE SEALED CONCRETE FINISH FLOOR.
8. SLOPE FLOORS TO DRAINS WHERE INDICATED AND COORDINATE ELEVATIONS WITH PROCESS AND PLUMBING REQUIREMENTS.
9. ALL EXTERIOR DOORS, FRAMES, LOUVERS, AND ASSOCIATED HARDWARE SHALL BE SUITABLE FOR THE PROJECT ENVIRONMENT AND SHALL BE CORROSION-RESISTANT WHERE EXPOSED TO MOISTURE, CHEMICALS, OR WASTEWATER-TREATMENT CONDITIONS.
10. MAINTAIN REQUIRED EXIT ACCESS AND EGRESS PATHS CLEAR OF EQUIPMENT, PIPING, STORAGE, AND OTHER OBSTRUCTIONS. DOORS SHALL OPERATE IN ACCORDANCE WITH APPLICABLE BUILDING AND LIFE-SAFETY CODE REQUIREMENTS.
11. PROVIDE FIRESTOPPING AND SEALING AT ALL REQUIRED PENETRATIONS AND JOINTS IN RATED ASSEMBLIES. COORDINATE CONSTRUCTION CLASSIFICATIONS, WALL RATINGS, AND REQUIRED SEPARATIONS WITH THE LIFE SAFETY AND CODE DRAWINGS.

NO.	DATE	REVISION	APP.

EJES INCORPORATED
CORPORATE OFFICE:
12801 N. CENTRAL EXPWY, SUITE 700,
DALLAS, TX 75243 TEL: 214-343-1210
HOUSTON OFFICE:
6161 SAVOY DRIVE, SUITE 830. HOUSTAN, TX 77036
TEL: 281-272-1612M

MBROH ENGINEERING
11757 KATY FWY,
SUITE 625
HOUSTON, TX 77077
713-468-2545

SURVEYED BY:
FB NO.

CITY OF HOUSTON
HOUSTON PUBLIC WORKS

WHITE OAKS WWTP IMPROVEMENTS

ARCHITECTURAL
ANALYZER BUILDING FLOOR PLAN

WBS NUMBER	FOR CITY OF HOUSTON USE ONLY
R-000265-0158-3	
DRAWING SCALE	
1/2"=1'-0"	
CITY OF HOUSTON PM	
SHAHIDUR RAHMAN, PE	
SHEET NO. 106 OF 189	

FILE PATH: C:\Users\snajmusahar\DC\ACCDocs\MBROH ENGINEERING INC (HOUSTON)\White Oak Wastewater Treatment Plant Improvements\Project Files\08 Architectural\01 Sheets\A-12 Exterior Walls & Doors Repairs.dwg
PLOTTED: 30/10/2026

NOTES BY SYMBOL " ⬡ ":

1. REPLACE ALL DOORS WITH NEW STAINLESS -316 DOOR AT ALL BUILDING.
2. SEAL ANY CRACKS IN ACCORDANCE WITH CITY OF HOUSTON SPECIFICATIONS.
3. SCRAPE OFF EXISTING PAINT WITH A PUTTY KNIFE OR PAINT SCRAPER.
4. BRUSH WASH TO REMOVE DIRT FROM STAIRS.
5. PRIMING - CHOOSE A BONDING AND FILLING PRIMER IN ACCORDANCE WITH CITY OF HOUSTON SPECIFICATIONS. LET THE CMU DRY FOR 24 HOURS.
6. PAINTING - (CITY OF HOUSTON TO PICK THE DESIRED COLOR, APPLY THE PAINT IN ACCORDANCE WITH CITY OF HOUSTON SPECIFICATIONS) ALLOW IT TO DRY FOR 12 HOURS BEFORE ADDING A SECOND COAT.

NO.	DATE	REVISION	APP.

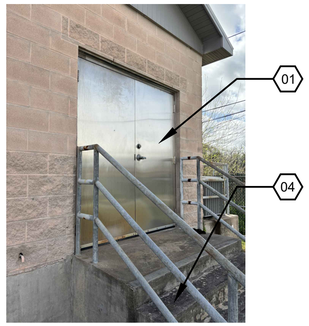

03 PHOTO - EXTERIOR METAL DOOR @ ADMINISTRATION BUILDING SCALE: NTS

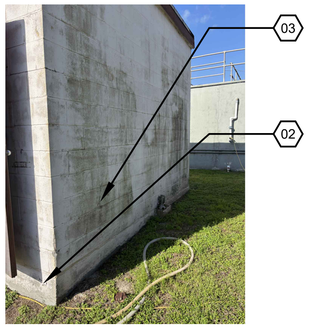

02 PHOTO - WALL @ CONTROL BUILDING SCALE: NTS

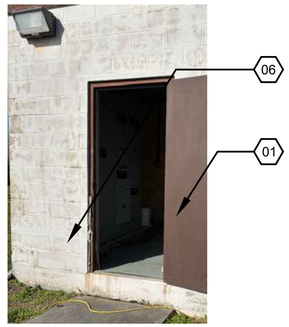

01 PHOTO - DOOR @ CONTROL BUILDING SCALE: NTS

EJES INCORPORATED
CORPORATE OFFICE:
12801 N. CENTRAL EXPWY, SUITE 700,
DALLAS, TX 75243 TEL: 214-343-1210
HOUSTON OFFICE:
8161 SAVOY DRIVE, SUITE 830. HOUSTAN, TX 77036
TEL: 281-272-1612M

MBROH 20 ENGINEERING
11757 KATY FWY,
SUITE 625
HOUSTON, TX 77077
713-468-2545

SURVEYED BY:
FB NO.

CITY OF HOUSTON
HOUSTON PUBLIC WORKS

WHITE OAKS WWTP IMPROVEMENTS

ARCHITECTURAL
EXTERIOR WALLS & DOORS REPAIRS

WBS NUMBER	FOR CITY OF HOUSTON USE ONLY
R-000265-0158-3	
DRAWING SCALE	
N.T.S	
CITY OF HOUSTON PM	
SHAHIDUR RAHMAN, PE	
SHEET NO. 107 OF 189	

A-12

PLOTTED: 30/10/2026
FILE PATH: C:\Users\snajmusahar\DC\ACCDocs\MBROH ENGINEERING INC (HOUSTON)\White Oak Wastewater Treatment Plant Improvements\Project Files\08 Architectural\01 Sheets\A-13 Exterior Door Schedule.dwg

Door Schedule

DOOR NO		DOOR W	DOOR H	DOOR T	DOOR Mat.	DOOR Finish	TYPE ELEV.	Frame Material	Finish	Rating	Hardware Set	Remarks
01	REFER TO PHOTOS ON SHEET NO A-07	3'-0	7'-0"		SS	SS	D2	SS	SS	-0-	205	
02	REFER TO PHOTOS ON SHEET NO A-07	3'-0	7'-0"		SS	SS	D2	SS	SS	-0-	205	
03	REFER TO PHOTOS ON SHEET NO A-07	12'-0	12'-0"		AL	AL	D1	AL	AL	-0-	001	OVERHEAD ROLLING DOOR
04	REFER TO PHOTOS ON SHEET NO A-07	3'-0	7'-0"		SS	SS	D2	SS	SS	-0-	205	
05	REFER TO PHOTOS ON SHEET NO A-07	3'-0	7'-0"		SS	SS	D2	SS	SS	-0-	205	
07	REFER TO PHOTOS ON SHEET NO A-07	PAIR 3'-0"	7'-0"		SS	SS	D2	SS	SS	-0-	204	
08	REFER TO PHOTOS ON SHEET NO A-07	3'-0	7'-0"		SS	SS	D2	SS	SS	-0-	205	
09	REFER TO PHOTOS ON SHEET NO A-07	3'-0	7'-0"		SS	SS	D2	SS	SS	-0-	212	

HARDWARE SET NO 001

QTY	Description	Catalog No.	Finish	MFR
1 EA	MORTISE CYLINDER	C987	626	FAL
1 EA	SFIC CORE	C606	626	FAL

HARDWARE SET NO 204

QTY	Description	Catalog No.	Finish	MFR
6 EA	HINGE	5BB1HW 4.5 X 4.5 NRP	630	IVE
1 EA	AUTO FLUSH BOLT	FB31P/FB41P AS REQ	630	IVE
1 EA	DUST PROOF STRIKE	DP2	626	IVE
1 EA	STORE DOOR LOCK	MA371BDC DG	630	FAL
1 EA	SFIC CORE	C606	626	FAL
1 EA	COORDINATOR	COR X FL X MB X HW PREPS	628	IVE
2 EA	SURFACE CLOSER	4050A SCUSH SRI MTG BRKT, SPCR & PLATE AS REQ	689	LCN
2 EA	KICK PLATE	8400 10" X 1" LDW B-CS	630	IVE
1 EA	RAIN DRIP	142AA DW + 4" (OMIT @ COVERED OPENINGS)	AA	ZER
1 SET	GASKETING	328AA H & J	AA	ZER
1 SET	MEETING STILE	8193AA (2 PCS - 1 SET)	AA	ZER
2 EA	DOOR SWEEP	8198AA	AA	ZER
1 EA	THRESHOLD	65A	A	ZER

HARDWARE SET NO 205

QTY	Description	Catalog No.	Finish	MFR
3 EA	HINGE	5BB1 4.5 X 4.5	630	IVE
1 EA	STORE DOOR LOCK	MA371BDC DG	630	FAL
1 EA	SFIC CORE	C606	626	FAL
1 EA	SURFACE CLOSER	4050A SCUSH SRI MTG BRKT, SPCR & PLATE AS REQ	689	LCN
1 EA	GASKETING	488S PSA H & J (USE SILENCERS @ NON-RATED DOORS)	BK	ZER

HARDWARE SET NO 212

QTY	Description	Catalog No.	Finish	MFR
6 EA	HINGE	5BB1 4.5 X 4.5	630	IVE
1 EA	CONST LATCHING BOLT	FB51P/FB61P AS REQ	630	IVE
1 EA	DUST PROOF STRIKE	DP2	626	IVE
1 EA	STORE DOOR LOCK	MA371BDC DG	630	FAL
1 EA	SFIC CORE	C606	626	FAL
1 EA	GASKETING	488S PSA H & J (USE SILENCERS @ NON-RATED DOORS)	BK	ZER
1 SET	MEETING STILE	8193AA (2 PCS - 1 SET) (OMIT @ NON-RATED OPENINGS)	AA	ZER

01 EXTERIOR DOOR SCHEDULE

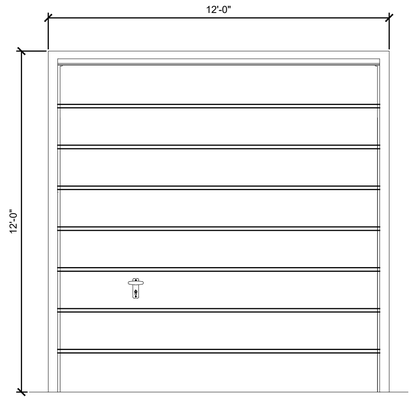

D1

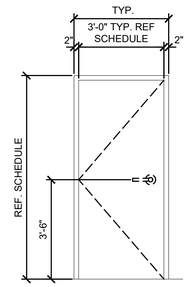

D2

GENERAL NOTES

1. CONTRACTOR TO VISIT ALL BUILDING DOORS AND VERIFY DOOR EXISTING DIMENSIONS OF THE DOORS AND OPENINGS. IF ANY OPENING IS LESS THAN 3'-4" CLEAR FOR THE INSTALLATIONS OF NEW DOORS.
2. COORDINATE HARDWARE REQUIREMENTS WITH DOOR MANUFACTURER PRIOR TO SUBMITTALS.
3. REMOVE CYLINDER AND CORE IF NOT REQUIRED.

ABBREVIATIONS

SS = STAINLESS STEEL
AL = ALUMINUM
GL = GLASS
PF = PRE-FINISHED
HM = HOLLOW METAL
WD = WOOD
PT = PAINTED
CA = CLEAR

NO.	DATE	REVISION	APP.

EJES INCORPORATED
CORPORATE OFFICE:
12801 N. CENTRAL EXPWY, SUITE 700,
DALLAS, TX 75243 TEL: 214-343-1210
HOUSTON OFFICE:
8161 SAVOY DRIVE, SUITE 830. HOUSTAN,
TX 77036
TEL: 281-272-1612M

MBROH 20 ENGINEERING
11757 KATY FWY,
SUITE 625
HOUSTON, TX 77077
713-468-2545

SURVEYED BY:
FB NO.

CITY OF HOUSTON
HOUSTON PUBLIC WORKS

WHITE OAKS WWTP IMPROVEMENTS

ARCHITECTURAL
EXTERIOR DOOR SCHEDULE

WBS NUMBER	FOR CITY OF HOUSTON USE ONLY
R-000265-0158-3	
DRAWING SCALE	
N.T.S	
CITY OF HOUSTON PM	
SHAHIDUR RAHMAN, PE	
SHEET NO. 108 OF 189	

11/4/2026 4:34:57 PM

GENERAL ABBREVIATIONS

A	ACC	AIR COOLED CONDENSER
	ACH	AIR CHANGES PER HOUR
	AC/HR	AIR CHANGES PER HOUR
	ACU	AIR CONDITIONER UNIT
	AD	ACCESS DOOR
	AFF	ABOVE FINISHED FLOOR
	AG	ABOVE GRADE
	AHU	AIR HANDLING UNIT
	AL	ALUMINUM
	ALT	ALTITUDE
	AP	ACCESS PANEL
	ATC	AUTOMATIC TEMPERATURE CONTROL
	AUTO	AUTOMATIC
	AUX	AUXILIARY
	AV	AUTOMATIC AIR RELEASE VENT
	AVG	AVERAGE
B	B TO B	BACK TO BACK
	BBD	BACK DRAFT SELF ACTING DAMPER
	BBH	BASE BOARD HEATER
	BHP	BRAKE HORSEPOWER
	BOD	BOTTOM OF DUCT
	BOP	BOTTOM OF PIPE
	BOT	BOTTOM
	BTU	BRITISH THERMAL UNIT
	BTUH	BTU PER HOUR
C	C TO C	CENTER TO CENTER
	CCW	COUNTER CLOCKWISE
	CDS/CDR	CONDENSER WATER SUPPLY/RETURN
	CENT	CENTRIFUGAL
	CFM	CUBIC FEET PER MINUTE
	CHWR	CHILLED WATER RETURN
	CHWS	CHILLED WATER SUPPLY
	CL	CENTER LINE
	CLASS/DIV	NEC AREA CLASSIFICATION
	CLG	CEILING
	CO	CLEANOUT
	COL	COLUMN
	COND	CONDENSATE DRAIN
	CP	CONTROL PANEL
	CTR	CENTER
	CU	CONDENSING UNIT
	CU FT	CUBIC FEET
	CW	CLOCKWISE
D	D	TO DRAIN (NEAREST)
	DACS	DATA ACQUISITION AND CONTROL SYSTEM
	DB	DRY BULB
	DEG	DEGREE
	DG	DOOR GRILLE
	DH	DUCT HEATER
	DIA	DIAMETER
	DISCH	DISCHARGE
	DN	DOWN
	DPMS	DIFFERENTIAL PRESSURE MONITORING SYSTEM
	DWG	DRAWING
	DX	DIRECT EXPANSION COIL
E	EA	EACH; EXHAUST AIR
	EER	ENERGY-EFFICIENCY RATING
	EF	EXHAUST AIR FAN
	EG	EXHAUST GRILLE
	EMERG	EMERGENCY
	EMO	EMERGENCY OFF
	ENT	ENTERING
	EUH	ELECTRIC UNIT HEATER
	EXH	EXHAUST
	EXP	EXPANSION/COMPRESSION TANK
F	F	FAHRENHEIT
	FBV	FLOW BALANCE & SHUTOFF VALVE
	FC	FLEX CONNECTION
	FD	FIRE DAMPER
	FG	FLOOR GRILLE
	FLA	FULL LOAD AMPERAGE
	FLR	FLOOR
	FLG	FLANGE
	FOB	FLAT ON BOTTOM
	FOT	FLAT ON TOP
	FPM	FEET PER MINUTE
	FRP	FIBER-REINFORCED PLASTIC
	FS	FLOW SENSOR
	FTR	FIN-TUBE RADIATION
	FWE	FURNISHED WITH EQUIPMENT
G	G/CC	GRAMS PER CUBIC CENTIMETERS
	GPM	GALLONS PER MINUTE
	GS	GALVANIZED STEEL
H	H	HEIGHT
	HD	HEAT DETECTOR
	H-O-A	HAND-OFF-AUTO
	HP	HORSEPOWER
	H&V	HEATING AND VENTILATING
	HVAC	HEATING, VENTILATING AND AIR CONDITIONING
	HZ	HERTZ
I	ID	INSIDE DIAMETER
	IN	INCH
	INS	INSULATE, INSULATION
	INSTR	INSTRUMENT(ATION)
L	L	LENGTH
	LAT	LEAVING AIR TEMPERATURE
	LCP	LOCAL CONTROL PANEL
	LD	LOUVER DOOR
	LRA	LOCKED ROTOR AMPERAGE
	LVG	LEAVING
	LWT	LEAVING WATER TEMPERATURE
M	M	MOTOR
	MATL	MATERIAL
	MAX	MAXIMUM
	MBH	THOUSAND BTU PER HOUR
	MCA	MINIMUM CIRCUIT AMPACITY
	MCC	MOTOR CONTROL CENTER MECHANICAL
	MECH	MANUFACTURER
	MFR	MINIMUM
	MIN	MISCELLANEOUS
	MISC	MOUNTED
	MTD	NOT APPLICABLE
N	N/A	NORMALLY CLOSED
	NC	NECK SIZE
	NK	NORMALLY OPEN
	NO	NOMINAL
	NOM	NON POTABLE WATER
	NPW	NOT TO SCALE
	NTS	OUTSIDE AIR
O	OA	OPPOSED BLADE DAMPER
	OBD	ON CENTER
	OC	ODOR CONTROL AIR
	OCA	OUTSIDE DIAMETER
	OD	OPPOSITE
	OPP	PRESSURE DROP
P	PD	PANEL
	PNL	PARTS PER BILLION
	PPB	POSITIVE PRESSURIZATION UNIT
	PPU	POUNDS PER SQUARE INCH
	PSI	PSI ABSOLUTE
	PSIA	PSI GAUGE
	PSIG	RADIUS
R	R	RETURN AIR
	RA	RETURN AIR FAN
	RAF	REDUCER
	RED	RETURN GRILLE
	RG	REVOLUTIONS PER MINUTE
	RPM	RETURN REGISTER
	RR	SUPPLY AIR
S	SA	SUPERVISORY CONTROL AND DATA ACQUISITION
	SCADA	SMOKE DETECTOR
	SD	SUPPLY AIR FAN
	SF	SCHEDULE
	SCH	STATIC PRESSURE
	SP	SPECIFICATION
	SPEC	SUPPLY REGISTER
	SR	STAINLESS STEEL
	SS	THERMOSTAT
T		TRANSFER AIR FAN
	T	TEMPERATURE DIFFERENCE
	TAF	TOTALLY-ENCLOSED FAN-COOLED
	TD	TEMPERATURE
	TEFC	TOP OF STEEL
		THERMAL EXPANSION VALVE
	TEMP	TYPICAL
	TOS	
	TXV	HEAT TRANSFER COEFFICIENT
	TYP	UNDERCUT
U		UNIT HEATER
	U	UNDERWRITERS LABORATORY
	UC	UNLESS NOTED OTHERWISE
	UH	
	UL	VOLTS
	UNO	VARIABLE AIR VOLUME
V		VELOCITY
	V	
	VAV	WIDTH
	VEL	WITH
W		WITHOUT
	W	WALL MTD. AIR CONDITIONER
	W/	WET BULB
	W/O	WATER COLUMN
	WAC	WALL GRILLE, WATER GAUGE
	WB	
	WC	
	WG	

PIPE SYMBOLS FITTINGS

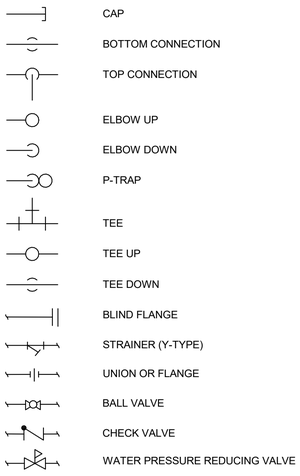

MATERIAL CODES

ALU	ALUMINUM
CPVC	CHLORINATED POLYVINYL CHLORIDE
CU	COPPER
FRP	FIBERGLASS REINFORCED PLASTIC
GS	GALVANIZED STEEL
PVC	POLYVINYL CHLORIDE
PWHDPE	PROFILE WALL HIGH DENSITY POLYETHYLENE BLACK
STL	STEEL
SS	STAINLESS STEEL

REGISTERS GRILLES AND DIFFUSERS

EG	EXHAUST GRILLE
ER	EXHAUST REGISTER
RG	RETURN GRILLE
RR	RETURN REGISTER
SD	SUPPLY DIFFUSER
SG	SUPPLY GRILLE
SR	SUPPLY REGISTER
TG	TRANSFER GRILLE

NOTE: THIS IS A GENERAL LIST OF SYMBOLS AND ABBREVIATIONS. NOT ALL ITEMS SHOWN HERE APPEAR ON THE CONTRACT DRAWINGS.

HVAC SYMBOLS SPECIALTIES

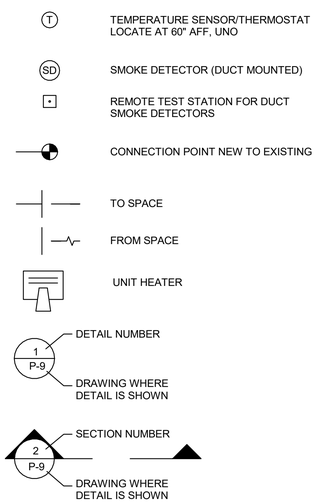

DUCTWORK SYMBOLS

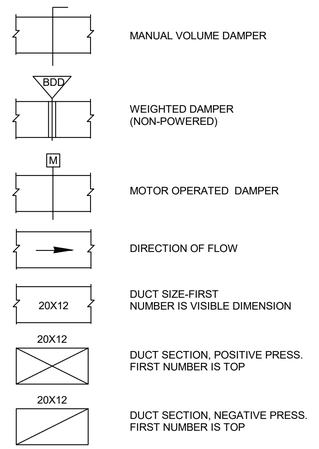

HVAC GENERAL NOTES

1. HVAC EQUIPMENT DIMENSIONS, LOCATIONS, DUCTWORK AND PIPING SYSTEM LAYOUTS ARE BASED ON EQUIPMENT SELECTED BY THE ENGINEER. IF THE CONTRACTOR PROPOSES TO FURNISH EQUIPMENT THAT REQUIRES AN ARRANGEMENT OR SPACE DIFFERING FROM THAT INDICATED ON THE DRAWINGS OR SPECIFIED, THE CONTRACTOR SHALL PREPARE AND SUBMIT TO THE ENGINEER FOR APPROVAL, DETAILED ARCHITECTURAL, STRUCTURAL, MECHANICAL, PLUMBING, INSTRUMENTATION, HVAC AND ELECTRICAL DRAWINGS AND EQUIPMENT LISTS SHOWING ALL NECESSARY CHANGES AND EMBODYING ALL FEATURES OF THE HE PROPOSES TO FURNISH. THIS INFORMATION SHALL INCLUDE BUT EQUIPMENT NOT BE LIMITED TO PLANS, SECTIONS, DETAILS, AND SCHEMATICS OF ALL SUCH CHANGES IF APPROVED BY THE ENGINEER APPURTENANCES REQUIRED. SHALL BE AT NO EXTRA COST TO THE OWNER. THE CONTRACTOR SHALL ASSUME THE COST OF, AND THE RESPONSIBILITY FOR SATISFACTORILY ACCOMPLISHING ALL THE NECESSARY CHANGES CORRESPONDING TO THE DIMENSIONS AND CHARACTERISTICS OF THE EQUIPMENT SUBMITTED AND APPROVED BY THE ENGINEER. REFER TO SPECIFICATIONS FOR FURTHER DETAILS.

2. SIZES OF EQUIPMENT PADS INDICATED ON THE DRAWINGS ARE APPROXIMATE. EXACT DIMENSIONS SHALL BE DETERMINED BY THE CONTRACTOR FOR THE EQUIPMENT FURNISHED. ALL FLOOR MOUNTED EQUIPMENT SHALL BE SET ON CONCRETE PADS CONFORMING TO DETAILS SHOWN ON THE STRUCTURAL DRAWINGS.

3. DIELECTRIC COUPLINGS, FLANGES OR UNIONS SHALL BE INSTALLED AT ALL CONNECTIONS OF COPPER PIPE TO OTHER TYPES OF METALLIC PIPING.

4. UNLESS OTHERWISE SHOWN ON THE DRAWING ALL FLOOR SLAB AND WALL PENETRATIONS SHALL BE AS SHOWN ON THE WALL PENETRATION DETAILS. ABOVE GROUND EXTERIOR WALL AND ROOF PENETRATIONS SHALL BE AS SHOWNS ON THE ARCHITECTURAL DRAWINGS. IF APPROVED BY THE ENGINEER, THE CONTRACTOR MAY SUBSTITUTE ALTERNATE METHODS PROVIDING THEY MEET INTENDED DESIGN REQUIREMENTS.

5. NOT ALL AND ONLY CERTAIN TYPES OF SUPPORTS ARE SHOWN ON THE HVAC DRAWINGS. UNLESS OTHERWISE DETAILED ON THE DRAWINGS ALL PIPE AND DUCT SUPPORTS SHALL BE DESIGNED, FURNISHED AND INSTALLED BY THE CONTRACTOR AS SPECIFIED AND TO THE APPROVAL OF THE ENGINEER.

6. RELATIONSHIP OF PIPES, DUCTWORK, ELECTRICAL LINES, CABLE TRAYS, CONDUIT AND OTHER TRADES WORK TO STRUCTURAL WORK

   6.1) PIPES, DUCTWORK, ELECTRICAL LINES, CABLE TRAYS, CONDUIT AND OTHER TRADES' WORK SHALL NOT PASS THROUGH STRUCTURAL FRAMING ELEMENTS, CMU WALL GROUTED CELLS OR CONCRETE WALLS AND SLABS UNLESS SPECIFICALLY SHOWN ON STRUCTURAL DRAWINGS OR IF GIVEN SPECIFIC PRIOR WRITTEN APPROVAL BY THE ENGINEER OF RECORD FOR THE STRUCTURAL DRAWINGS

   6.2) PIPES SUPPORTED FROM ROOF FRAMING: - THE CONTRACTOR SHALL BE PERMITTED TO SUSPEND, FROM THE ROOF FRAMING, CHEMICAL CARRIER PIPES (PIPES FULL WITH CHEMICALS) 3 INCHES IN DIAMETER AND SMALLER (THIS INCLUDES CHEMICAL CONTAINMENT/SECONDARY PIPING (PIPE THAT NORMALLY DOESN'T HOLD LIQUID) OF UP TO 6" INCHES DIAMETER) - SPRINKLER SUPPLY LINES GREATER THAN 3" IN DIAMETER, AND CABLE TRAYS, SHALL ONLY BE LOCATED WITHIN 2'-0" HORIZONTALLY OF JOIST BEARING LOCATIONS - PIPING SUPPORTED FROM ROOF FRAMING SHALL NOT BE SPACED CLOSER THAN 2'-0" HORIZONTALLY CENTER TO CENTER

   6.3) CONTRACTOR SHALL PROVIDE ANY ADDITIONAL LOADING ON STRUCTURAL COMPONENTS, SUCH AS HANGING PIPES AND CONDUIT FROM ROOF JOISTS, TO THE COMPONENT'S SUPPLIER FOR THE SUPPLIER'S DESIGN.

NO.	DATE	REVISION	APP.

KWH ENGINEERING LLC
8080 N. CENTRAL EXPRESSWAY
SUITE 1700
DALLAS, TX 75206
P: 214.453.5348
TBPELS FIRM F-17606

MBROH 20 ENGINEERING
11757 KATY FWY,
SUITE 625
HOUSTON, TX 77077
713-468-2545

SURVEYED BY:

FB NO.

INTERIM REVIEW DOCUMENTS
NOT INTENDED FOR BIDDING, PERMIT OR CONSTRUCTION PURPOSES)
XUEFEI FENG
TEXAS REGISTRATION No: 89274
DATE: 11/02/2026

CITY OF HOUSTON
HOUSTON PUBLIC WORKS

WHITE OAKS WWTP IMPROVEMENTS

HVAC

LEGENDS SYMBOLS AND ABBREVIATIONS

WBS NUMBER	FOR CITY OF HOUSTON USE ONLY
R-000265-0158-3	
DRAWING SCALE	
NONE	
CITY OF HOUSTON, PM	
SHAHIDUR RAHMAN, PE	
SHEET NO. 109 OF 189	

H-01

Autodesk Docs://White Oaks Wastewater Treatment Plant Improvements/White Oak Bayou WWTP_Admin Bldg-HVAC_25.rvt

11/4/2026 5:31:08 PM

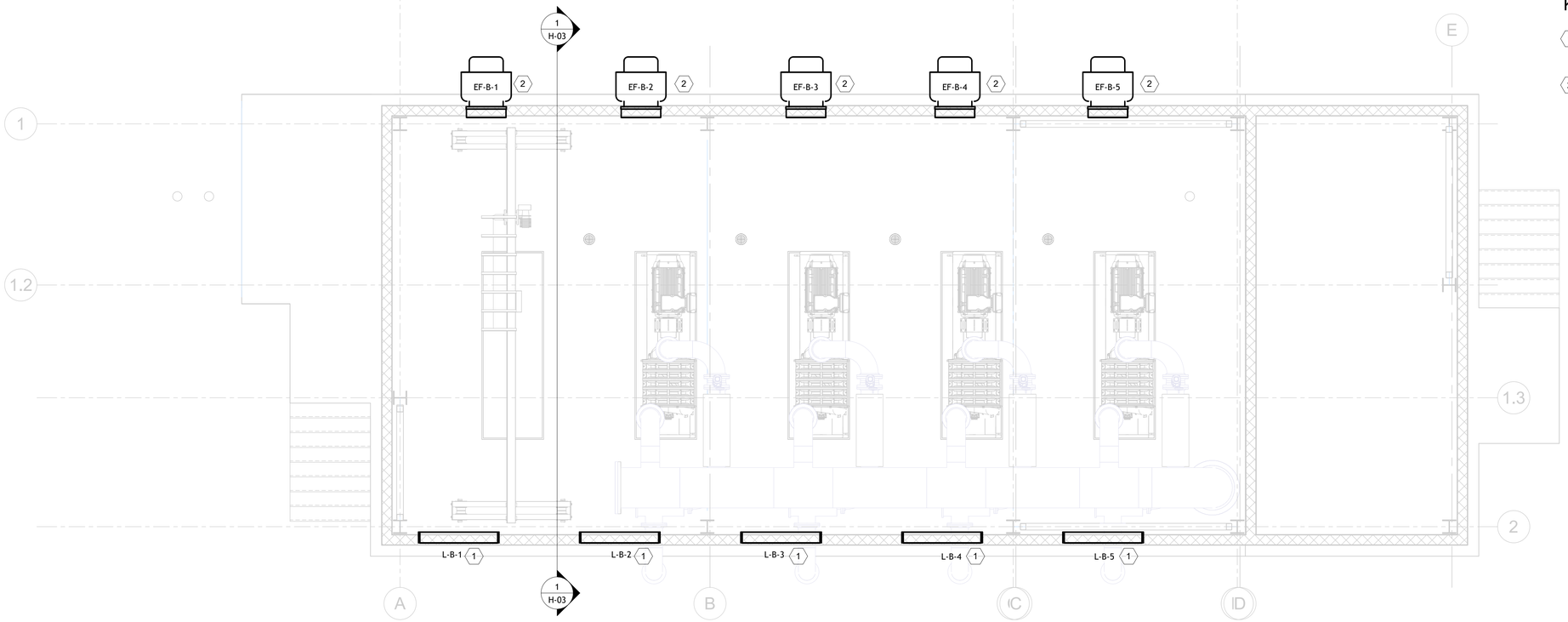

1 BLOWER BUILDING HVAC FLOOR PLAN
1/4" = 1'-0"

4 2 0 4 8

SCALE: 1/4"=1'-0"

GENERAL NOTES:

1. ARCHITECTURAL, STRUCTURAL, AND PROCESS MECHANICAL BACKGROUNDS ARE SHOWN FOR REFERENCE ONLY. REFER TO ARCHITECTURAL, STRUCTURAL, AND PROCESS MECHANICAL DRAWINGS FOR DETAILS.
2. REFER TO ELECTRICAL AND I&C DRAWINGS FOR TEMPERATURE TRANSMITTER LOCATION AND ASSOCIATED CONTROL.
3. MOUNT THERMOSTAT AT 5'-0" A.F.F. AND LABEL WITH ITS CONTROL DEVICE TAG NUMBER.

KEYED NOTES:

1. 5'-0" (W) X 5'-0" (H) HIGH VELOCITY RAIN RESISTANT AND IMPACT RESISTANT LOUVER WITH BIRD SCREEN FOR OUTSIDE AIR INTAKE. REFER TO ARCHITECTURAL DRAWINGS FOR LOCATIONS OF WALL OPENINGS.
2. CENTRIFUGAL SIDE-WALL MOUNTED EXHAUST FAN WITH DIRECT DRIVE.

NO.	DATE	REVISION	APP.

KWH ENGINEERING LLC
8080 N. CENTRAL EXPRESSWAY
SUITE 1700
DALLAS, TX 75206
P: 214.453.5348
TBPELS FIRM F-17606

MBROH 20 ENGINEERING
11757 KATY FWY,
SUITE 625
HOUSTON, TX 77077
713-468-2545

INTERIM REVIEW DOCUMENTS
NOT INTENDED FOR BIDDING, PERMIT OR CONSTRUCTION PURPOSES)
XUEFEI FENG
TEXAS REGISTRATION No: 89274
DATE: 11/02/2026

SURVEYED BY:
FB NO.

CITY OF HOUSTON
HOUSTON PUBLIC WORKS

WHITE OAKS
WWTP IMPROVEMENTS
HVAC

BLOWER BUILDING FLOOR PLAN

WBS NUMBER	FOR CITY OF HOUSTON USE ONLY
R-000265-0158-3	
DRAWING SCALE	
1/4" = 1'-0"	
CITY OF HOUSTON, PM	
SHAHIDUR RAHMAN, PE	

H-02 SHEET NO. 110 OF 189

Autodesk Docs://White Oaks Wastewater Treatment Plant Improvements/20031-20-H_Rev_25.rvt

11/4/2026 5:30:25 PM

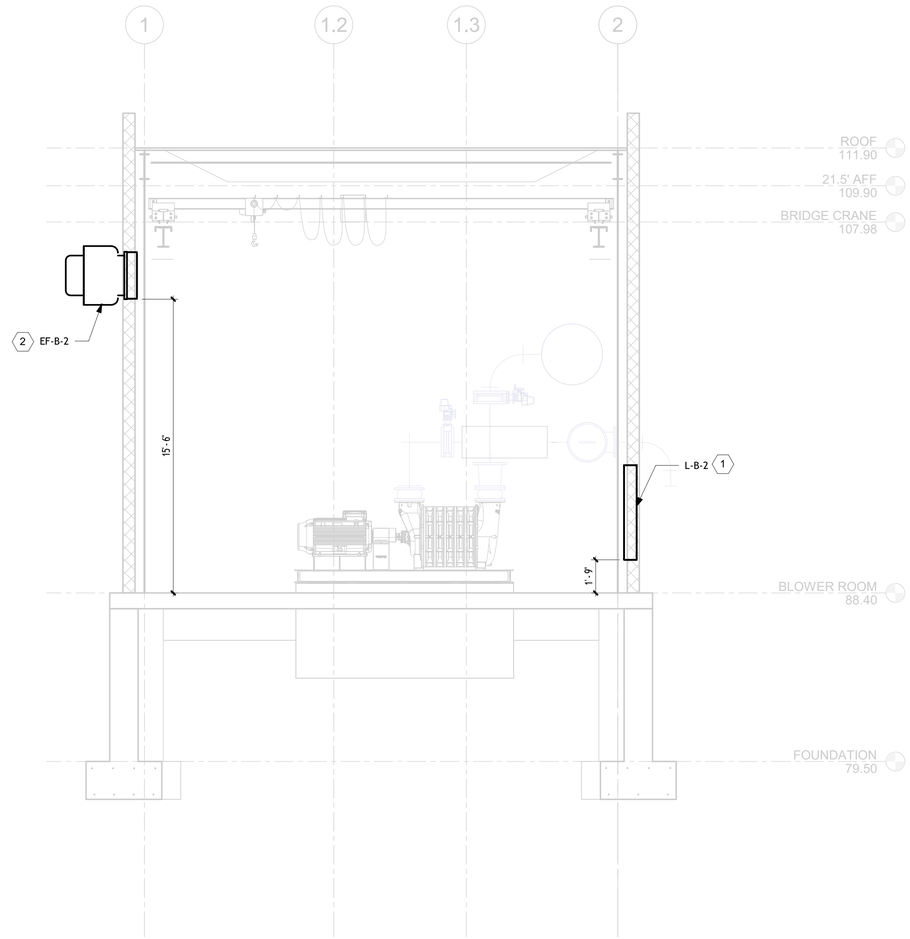

1 SECTION
1/4" = 1'-0"

4 2 0 4 8
SCALE: 1/4"=1'-0"

NO.	DATE	REVISION	APP.

GENERAL NOTES:

1. ARCHITECTURAL, STRUCTURAL, AND PROCESS MECHANICAL BACKGROUNDS ARE SHOWN FOR REFERENCE ONLY. REFER TO ARCHITECTURAL, STRUCTURAL, AND PROCESS MECHANICAL DRAWINGS FOR DETAILS.

KEYED NOTES:

1. 5'-0" (W) X 5'-0" (H) HIGH VELOCITY RAIN RESISTANT AND IMPACT RESISTANT LOUVER WITH BIRD SCREEN FOR OUTSIDE AIR INTAKE. REFER TO ARCHITECTURAL DRAWINGS FOR LOCATIONS OF WALL OPENINGS.
2. CENTRIFUGAL SIDE-WALL MOUNTED EXHAUST FAN WITH DIRECT DRIVE.

KWH ENGINEERING LLC
8080 N. CENTRAL EXPRESSWAY
SUITE 1700
DALLAS, TX 75206
P: 214.453.5348
TBPELS FIRM F-17606

MBROH ENGINEERING
11757 KATY FWY,
SUITE 625
HOUSTON, TX 77077
713-468-2545

INTERIM REVIEW DOCUMENTS
(NOT INTENDED FOR BIDDING, PERMIT OR CONSTRUCTION PURPOSES)
XUEFEI FENG
TEXAS REGISTRATION No: 89274
DATE: 11/02/2026

SURVEYED BY:
FB NO.

CITY OF HOUSTON
HOUSTON PUBLIC WORKS

WHITE OAKS
WWTP IMPROVEMENTS
HVAC

BLOWER BUILDING SECTION

WBS NUMBER	FOR CITY OF HOUSTON USE ONLY
R-000265-0158-3	
DRAWING SCALE	
1/4" = 1'-0"	
CITY OF HOUSTON, PM	
SHAHIDUR RAHMAN, PE	

Autodesk Docs://White Oaks Wastewater Treatment Plant Improvements/20031-20-H_Rev_25.rvt

11/4/2026 5:31:39 PM

GENERAL NOTES:

1. ARCHITECTURAL, STRUCTURAL, AND PROCESS MECHANICAL BACKGROUNDS ARE SHOWN FOR REFERENCE ONLY. REFER TO ARCHITECTURAL, STRUCTURAL, AND PROCESS MECHANICAL DRAWINGS FOR DETAILS.

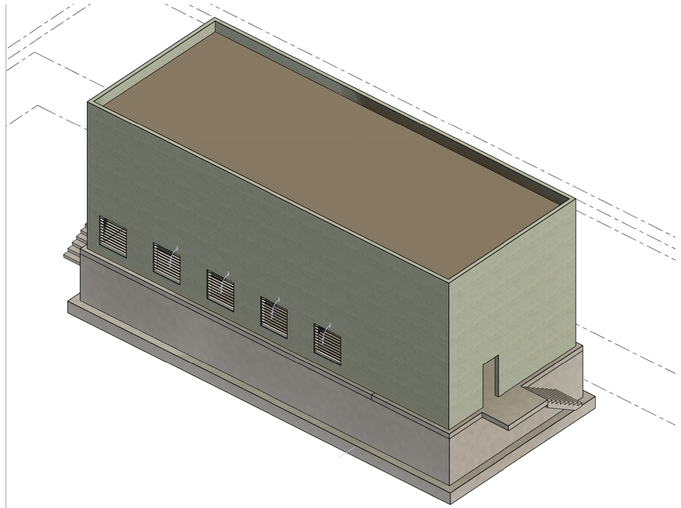

1 PERSPECTIVE - LOUVERS

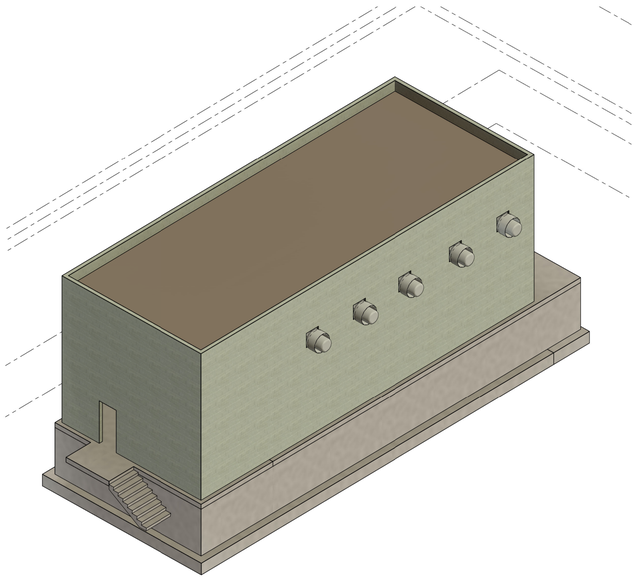

2 PERSPECTIVE - FANS

NO.	DATE	REVISION	APP.

KWH ENGINEERING LLC
8080 N. CENTRAL EXPRESSWAY
SUITE 1700
DALLAS, TX 75206
P: 214.453.5348
TBPELS FIRM F-17606

MBROH 20 ENGINEERING
11757 KATY FWY,
SUITE 625
HOUSTON, TX 77077
713-468-2545

INTERIM REVIEW DOCUMENTS
(NOT INTENDED FOR BIDDING, PERMIT OR CONSTRUCTION PURPOSES)
XUEFEI FENG
TEXAS REGISTRATION No: 89274
DATE: 11/02/2026

SURVEYED BY:
FB NO.

CITY OF HOUSTON
HOUSTON PUBLIC WORKS

WHITE OAKS WWTP IMPROVEMENTS

HVAC

BLOWER BUILDING PERSPECTIVES

WBS NUMBER	FOR CITY OF HOUSTON USE ONLY
R-000265-0158-3	
DRAWING SCALE	
NONE	
CITY OF HOUSTON, PM	
SHAHIDUR RAHMAN, PE	

H-04 SHEET NO. 112 OF 189

Autodesk Docs://White Oaks Wastewater Treatment Plant Improvements/20031-20-H_Rev. 25.rvt

11/4/2026 4:34:47 PM

Autodesk Docs://White Oaks Wastewater Treatment Plant Improvements/White Oak Bayou WWTP_Admin Bldg-HVAC_25.rvt

GENERAL NOTES:

1. THE EXISTING HVAC SYSTEMS ARE SHOWN BASED ON RECORD DRAWINGS AND SITE OBSERVATION. CONTRACTOR SHALL FIELD- VERIFY EXISTING SYSTEM LAYOUT AND CONDITION PRIOR TO CONSTRUCTION.
2. ALL EXISTING HVAC SYSTEMS SHALL REMAIN UNLESS NOTED OTHERWISE.
3. COORDINATE HVAC DEMOLITION WITH OTHER DISCIPLINES AND NEW WORK.

NO.	DATE	REVISION	APP.

NOTES BY SYMBOL : ⬡

1. DEMOLISH AND REMOVE EXISTING CONDENSING UNIT, INCLUDING ASSOCIATED REFRIGERANT PIPING BETWEEN CONDENSING UNIT AND INDOOR AIR-HANDLING UNIT, AND ASSOCIATED ELECTRICAL POWER WIRINGS AND CONDUITS.
2. DEMOLISH AND REMOVE EXISTING SUPPLY AIR DIFFUSER AT CEILING.
3. DEMOLISH AND REMOVE EXISTING SUPPLY AIR DUCTWORK AND ASSOCIATED SUPPORTS AND INSULATION.
4. DEMOLISH AND REMOVE EXISTING AIR-HANDLING UNIT ABOVE THE CEILING AND ASSOCIATED SUPPORTS AND CONDENSATE DRAIN.
5. DEMOLISH AND REMOVE EXISTING RETURN AIR DUCTWORK AND ASSOCIATED SUPPORTS AND INSULATION.

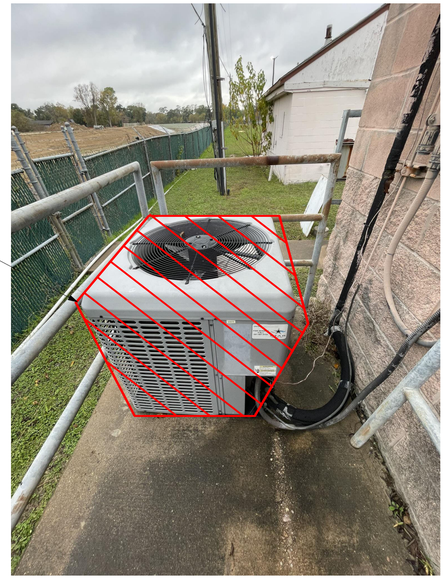

EXISTING CONDENSER UNIT

SCALE: NONE

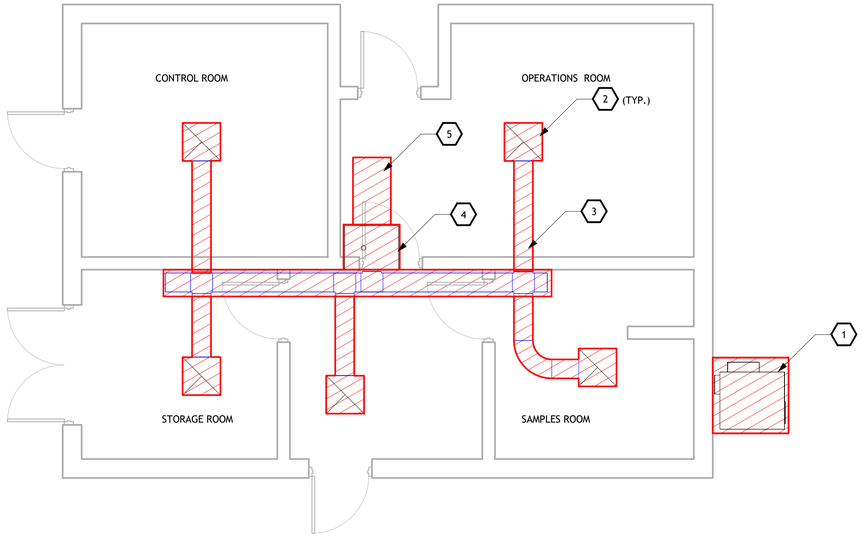

ADMINISTRATION BUILDING HVAC DEMOLITION PLAN

SCALE: 1/4" = 1'-0"

KWH ENGINEERING LLC
8080 N. CENTRAL EXPRESSWAY
SUITE 1700
DALLAS, TX 75206
P: 214.453.5348
TBPELS FIRM F-17606

MBROH 20 ENGINEERING
11757 KATY FWY,
SUITE 625
HOUSTON, TX 77077
713-468-2545

SURVEYED BY:

FB NO.

INTERIM REVIEW DOCUMENTS
(NOT INTENDED FOR BIDDING, PERMIT OR CONSTRUCTION PURPOSES)
XUEFEI FENG
TEXAS REGISTRATION No: 89274
DATE: 11/02/2026

CITY OF HOUSTON
HOUSTON PUBLIC WORKS

WHITE OAKS
WWTP IMPROVEMENTS
HVAC
ADMINISTRATION BUILDING
DEMOLITION PLAN

WBS NUMBER	FOR CITY OF HOUSTON USE ONLY
R-000265-0158-3	
DRAWING SCALE	
1/4" = 1'-0"	
CITY OF HOUSTON, PM	
SHAHIDUR RAHMAN, PE	

11/4/2026 4:34:38 PM



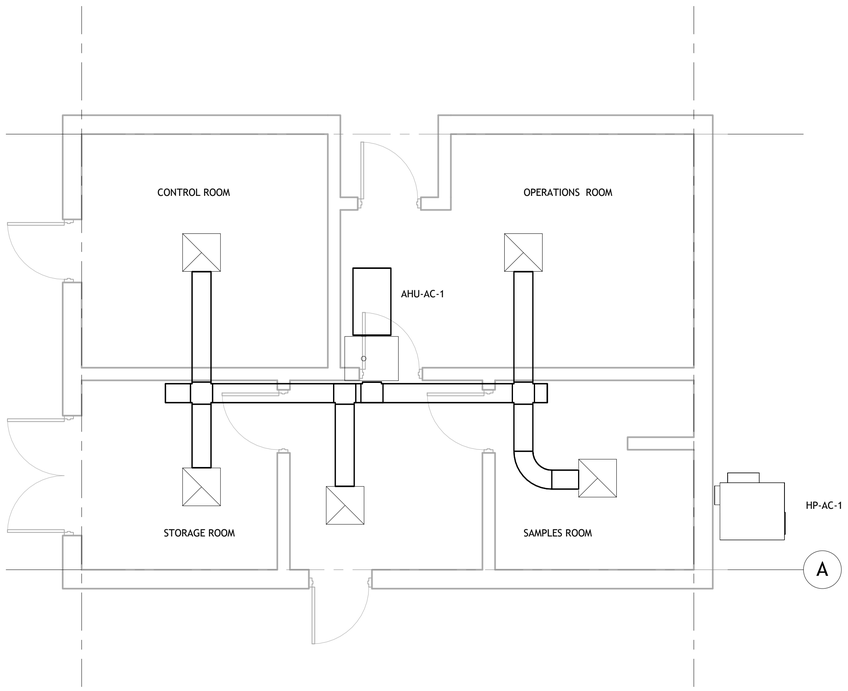

ADMINISTRATION BUILDING HVAC NEW PLAN

SCALE: 1/4" = 1'-0"

NO.	DATE	REVISION	APP.

KWH ENGINEERING LLC
8080 N. CENTRAL EXPRESSWAY
SUITE 1700
DALLAS, TX 75206
P: 214.453.5348
TBPELS FIRM F-17606

MBROH 20 ENGINEERING
11757 KATY FWY,
SUITE 625
HOUSTON, TX 77077
713-468-2545

SURVEYED BY:

FB NO.

INTERIM REVIEW DOCUMENTS
(NOT INTENDED FOR BIDDING, PERMIT OR CONSTRUCTION PURPOSES)

XUEFEI FENG
TEXAS REGISTRATION No: 88274
DATE: 11/02/2026

CITY OF HOUSTON
HOUSTON PUBLIC WORKS

WHITE OAKS WWTP IMPROVEMENTS

HVAC

ADMINISTRATION BUILDING NEW PLAN

WBS NUMBER	FOR CITY OF HOUSTON USE ONLY
R-000265-0158-3	
DRAWING SCALE	
1/4" = 1'-0"	
CITY OF HOUSTON, PM	
SHAHIDUR RAHMAN, PE	
SHEET NO. 114 OF 189	

H-06

Autodesk Docs://White Oaks Wastewater Treatment Plant Improvements/White Oak Bayou WWTP_Admin Bldg-HVAC_25.rvt

11/4/2026 4:43:39 PM

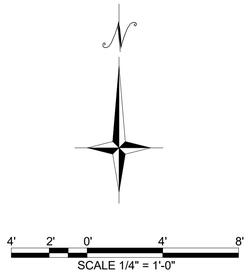



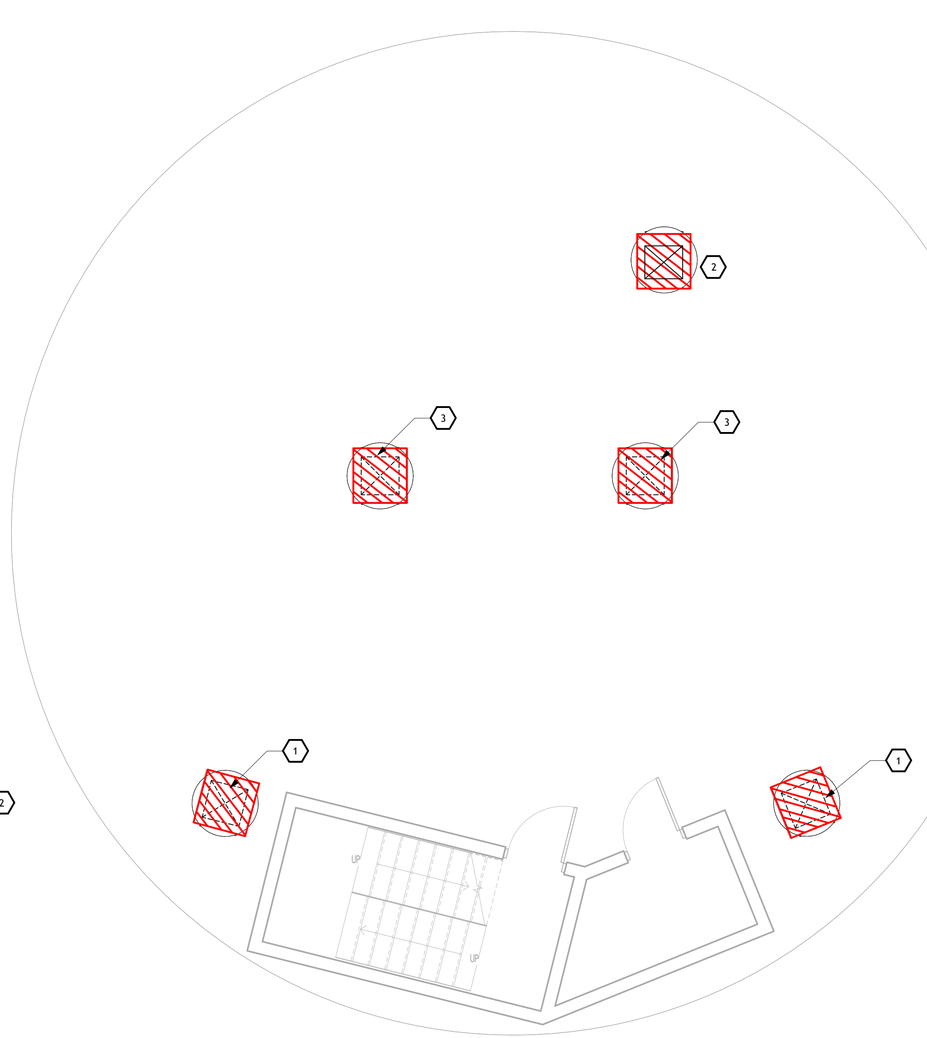

LIFT STATION HVAC DEMOLITION PLAN

SCALE: 1/4" = 1'-0"

GENERAL NOTES:

1. THE EXISTING HVAC SYSTEMS ARE SHOWN BASED ON RECORD DRAWINGS AND SITE OBSERVATION.
   CONTRACTOR SHALL FIELD- VERIFY EXISTING SYSTEM LAYOUT AND CONDITION PRIOR TO CONSTRUCTION.
2. ALL EXISTING HVAC SYSTEMS SHALL REMAIN UNLESS NOTED OTHERWISE.
3. COORDINATE HVAC DEMOLITION WITH OTHER DISCIPLINES AND NEW WORK.

NOTES BY SYMBOL : ⬡

1. DEMOLISH AND REMOVE EXISITING ROOFTOP EXHAUST FAN AND ASSOCIATED CURB. REUSE EXISTING ROOF OPENING FOR NEW EXHAUST FAN. REFER TO DRAWING XX FOR NEW WORK.
2. DEMOLISH AND REMOVE EXISTING STATIC AIR INTAKE VENT AND ASSOCIATED ROOF CURB. REUSE EXISTING ROOF OPENING FOR NEW VENT.
3. DEMOLISH AND REMOVE EXISTING SUPPLY FAN AND ASSOCIATED ROOF CURB. REUSE EXISTING ROOF OPENING FOR NEW SUPPLY FAN.

NO.	DATE	REVISION	APP.

KWH ENGINEERING LLC
8080 N. CENTRAL EXPRESSWAY
SUITE 1700
DALLAS, TX 75206
P: 214.453.5348
TBPELS FIRM F-17606

MBROH 20 ENGINEERING
11757 KATY FWY,
SUITE 625
HOUSTON, TX 77077
713-468-2545

INTERIM REVIEW DOCUMENTS
NOT INTENDED FOR BIDDING, PERMIT OR CONSTRUCTION PURPOSES)
SUEFEI FENG
TEXAS REGISTRATION No: 89274
DATE: 11/02/2026

SURVEYED BY:
FB NO.

CITY OF HOUSTON
HOUSTON PUBLIC WORKS

WHITE OAKS WWTP IMPROVEMENTS

HVAC

LIFT STATION DEMOLITION PLAN

WBS NUMBER	FOR CITY OF HOUSTON USE ONLY
R-000265-0158-3	
DRAWING SCALE	
1/4" = 1'-0"	
CITY OF HOUSTON, PM	
SHAHIDUR RAHMAN, PE	

H-07 SHEET NO. 115 OF 189

Autodesk Docs://White Oaks Wastewater Treatment Plant Improvements/White Oak Bayou WWTP_Lift station-HVAC_25.rvt

11/4/2026 4:43:36 PM

8' 4' 0' 8' 16'

SCALE 1/8" = 1'-0"

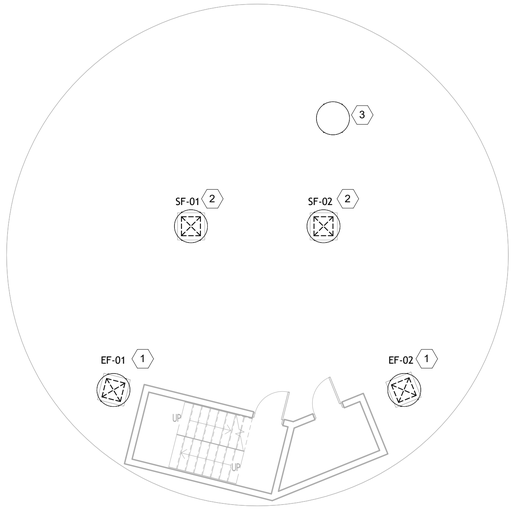

1 LIFT STATION HVAC PLAN - GRADE LEVEL
1/8" = 1'-0"

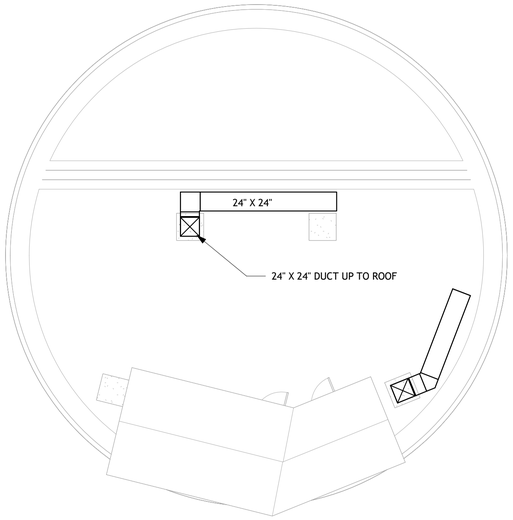

2 LIFT STATION HVAC PLAN - PUMP ROOM
1/8" = 1'-0"

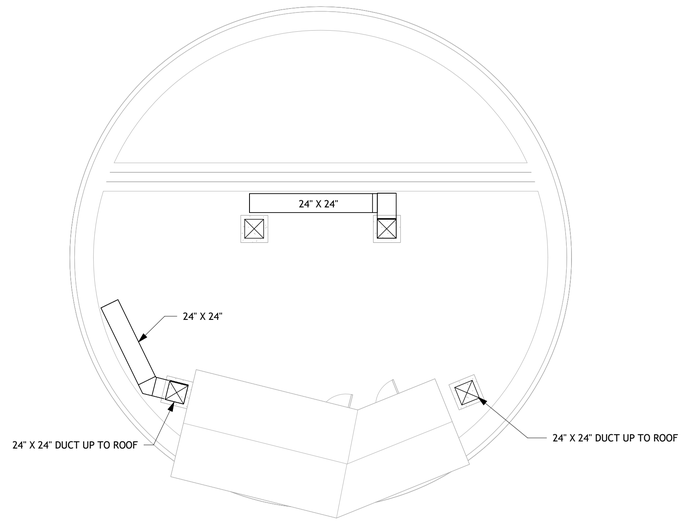

3 LIFT STATION HVAC PLAN - MOTOR ROOM
1/8" = 1'-0"

GENERAL NOTES:

1. THE EXISTING ARCHITECTURAL BACKGROUND IS SHOWN FOR REFERENCE ONLY. FIELD VERIFY EXACT LAYOUT PRIOR CONSTRUCTION.
2. COORDINATE THE NEW WORK SCHEDULE WITH THE DEMOLITION SCHEDULE AND SCHEDULES OF OTHER DISCIPLINES

NOTES BY SYMBOL : ⬡

1. FIBERGLASS HOODED EXHAUST FAN ON ROOFTOP. REUSE EXISTING ROOF OPENING AND CURB.
2. FIBERGLASS UPBLAST EXHAUST FAN ON ROOFTOP. REUSE EXISTING ROOF OPENING AND CURB.
3. FIBERGLASS STATIC OUTSIDE AIR INTAKE VENT. REUSE EXISTING ROOF OPENING AND CURB.

NO.	DATE	REVISION	APP.

KWH ENGINEERING LLC
8080 N. CENTRAL EXPRESSWAY
SUITE 1700
DALLAS, TX 75206
P: 214.453.5348
TBPELS FIRM F-17606

MBROH 20 ENGINEERING
11757 KATY FWY,
SUITE 625
HOUSTON, TX 77077
713-468-2545

INTERIM REVIEW DOCUMENTS
(NOT INTENDED FOR BIDDING, PERMIT OR CONSTRUCTION PURPOSES)
XUEFEI FENG
TEXAS REGISTRATION No: 89274
DATE: 11/02/2026

SURVEYED BY:
FB NO.

CITY OF HOUSTON
HOUSTON PUBLIC WORKS

WHITE OAKS
WWTP IMPROVEMENTS
HVAC

LIFT STATION NEW PLANS

WBS NUMBER	FOR CITY OF HOUSTON USE ONLY
R-000265-0158-3	
DRAWING SCALE	
1/8" = 1'-0"	
CITY OF HOUSTON, PM	
SHAHIDUR RAHMAN, PE	

H-08 SHEET NO. 116 OF 189

Autodesk Docs://White Oaks Wastewater Treatment Plant Improvements/White Oak Bayou WWTP_Lift station-HVAC_25.rvt

11/4/2026 4:52:09 PM

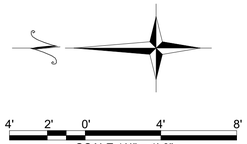

SCALE 1/4" = 1'-0"

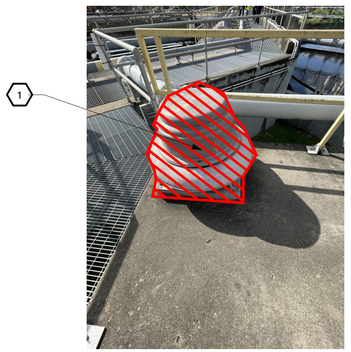

EXISTING DUCTWORK

SCALE: NONE

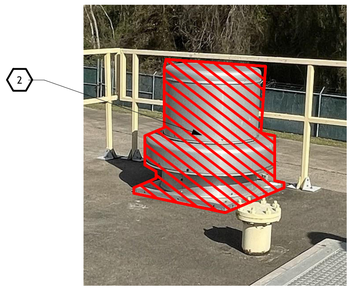

EXISTING EXHAUST FAN

SCALE: NONE

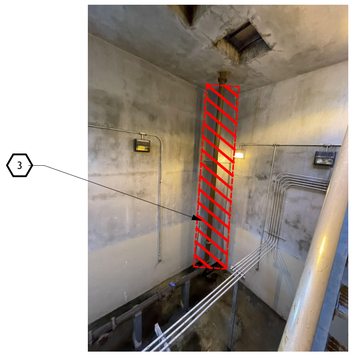

EXISTING EXHAUST DUCT

SCALE: NONE

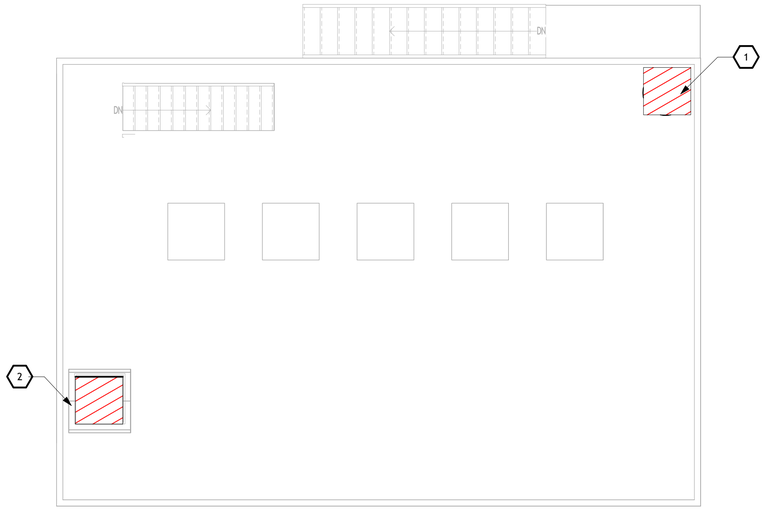

SCUM PUMP STATION HVAC DEMOLITION PLAN

SCALE: 1/4" = 1'-0"

GENERAL NOTES:

1. THE EXISTING HVAC SYSTEMS ARE SHOWN BASED ON RECORD DRAWINGS AND SITE OBSERVATION.
   CONTRACTOR SHALL FIELD- VERIFY EXISTING SYSTEM LAYOUT AND CONDITION PRIOR TO CONSTRUCTION.
2. ALL EXISTING HVAC SYSTEMS SHALL REMAIN UNLESS NOTED OTHERWISE.
3. COORDINATE HVAC DEMOLITION WITH OTHER DISCIPLINES AND NEW WORK.

NOTES BY SYMBOL : ⬡

1. DEMOLISH AND REMOVE EXISITING ROOFTOP EXHAUST FAN AND ASSOCIATED CURB. REUSE EXISTING ROOF OPENING FOR NEW EXHAUST FAN. REFER TO DRAWING XX FOR NEW WORK.
2. DEMOLISH AND REMOVE EXISTING ROOFTOP EXHAUST FAN AND ASSOCIATED CURB. REUSE EXISTING ROOF OPENING FOR NEW SUPPLY FAN. REFER TO DRAWING XX FOR NEW WORK.
3. DEMOLISH AND REMOVE EXISTING EXHAUST AIR DUCT AND ASSOCIATED SUPPORTS.

NO.	DATE	REVISION	APP.

KWH ENGINEERING LLC
8080 N. CENTRAL EXPRESSWAY
SUITE 1700
DALLAS, TX 75206
P: 214.453.5348
TBPELS FIRM F-17606

MBROH 20 ENGINEERING
11757 KATY FWY,
SUITE 625
HOUSTON, TX 77077
713-468-2545

INTERIM REVIEW DOCUMENTS
NOT INTENDED FOR BIDDING, PERMIT OR CONSTRUCTION PURPOSES)
SUEFEI FENG
TEXAS REGISTRATION No: 89274
DATE: 11/02/2026

SURVEYED BY:
FB NO.

CITY OF HOUSTON
HOUSTON PUBLIC WORKS

WHITE OAKS
WWTP IMPROVEMENTS
HVAC
SCUM PUMP STATION DEMOLITION PLAN

WBS NUMBER	FOR CITY OF HOUSTON USE ONLY
R-000265-0158-3	
DRAWING SCALE	
1/4" = 1'-0"	
CITY OF HOUSTON, PM	
SHAHIDUR RAHMAN, PE	

H-09 SHEET NO. 117 OF 189

Autodesk Docs://White Oaks Wastewater Treatment Plant Improvements/White Oak Bayou WWTP_ Scum Lift Station - HVAC_25.rvt

11/4/2026 4:53:23 PM

GENERAL NOTES:

1. THE EXISTING ARCHITECTURAL BACKGROUND IS SHOWN FOR REFERENCE ONLY. FIELD VERIFY EXACT LAYOUT PRIOR CONSTRUCTION.
2. COORDINATE THE NEW WORK SCHEDULE WITH THE DEMOLITION SCHEDULE AND SCHEDULES OF OTHER DISCIPLINES

NOTES BY SYMBOL : ⬡

1. DIRECT DRIVE UPBLAST CENTRIFUGAL EXHAUST FAN WITH MOTORIZED DAMPER AND 8"-TALL ROOF CURB. REUSE EXISTING ROOF OPENING.
2. HOODED DIRECT DRIVE SUPPLY FAN ON ROOFTOP WITH MOTORIZED DAMPER AND 24"-TALL ROOF CURB. REUSE EXISTING ROOF OPENING.

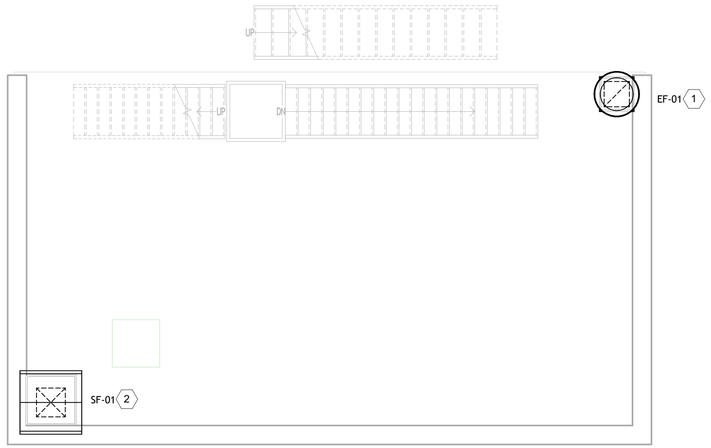

SCUM PUMP STATION HVAC NEW PLAN

SCALE: 1/4" = 1'-0"

NO.	DATE	REVISION	APP.

KWH ENGINEERING LLC
8080 N. CENTRAL EXPRESSWAY
SUITE 1700
DALLAS, TX 75206
P: 214.453.5348
TBPELS FIRM F-17606

MBROH ENGINEERING
11757 KATY FWY,
SUITE 625
HOUSTON, TX 77077
713-468-2545

INTERIM REVIEW DOCUMENTS
(NOT INTENDED FOR BIDDING, PERMIT OR CONSTRUCTION PURPOSES)
XUEFEI FENG
TEXAS REGISTRATION No: 89274
DATE: 11/02/2026

SURVEYED BY:
FB NO.

CITY OF HOUSTON
HOUSTON PUBLIC WORKS

WHITE OAKS
WWTP IMPROVEMENTS
HVAC

SCUM PUMP STATION NEW PLAN

WBS NUMBER	FOR CITY OF HOUSTON USE ONLY
R-000265-0158-3	
DRAWING SCALE	
1/4" = 1'-0"	
CITY OF HOUSTON, PM	
SHAHIDUR RAHMAN, PE	

H-10 SHEET NO. 118 OF 189

Autodesk Docs://White Oaks Wastewater Treatment Plant Improvements/White Oak Bayou WWTP_ Scum Lift Station - HVAC_25.rvt

11/4/2026 4:52:15 PM

GENERAL NOTES:

1. THE EXISTING ARCHITECTURAL BACKGROUND IS SHOWN FOR REFERENCE ONLY. FIELD VERIFY EXACT LAYOUT PRIOR CONSTRUCTION.
2. COORDINATE THE NEW WORK SCHEDULE WITH THE DEMOLITION SCHEDULE AND SCHEDULES OF OTHER DISCIPLINES

NOTES BY SYMBOL : ⬡

1. DIRECT DRIVE UPBLAST CENTRIFUGAL EXHAUST FAN WITH MOTORIZED DAMPER AND 8"-TALL ROOF CURB. REUSE EXISTING ROOF OPENING.
2. HOODED DIRECT DRIVE SUPPLY FAN ON ROOFTOP WITH MOTORIZED DAMPER AND 24"-TALL ROOF CURB. REUSE EXISTING ROOF OPENING.

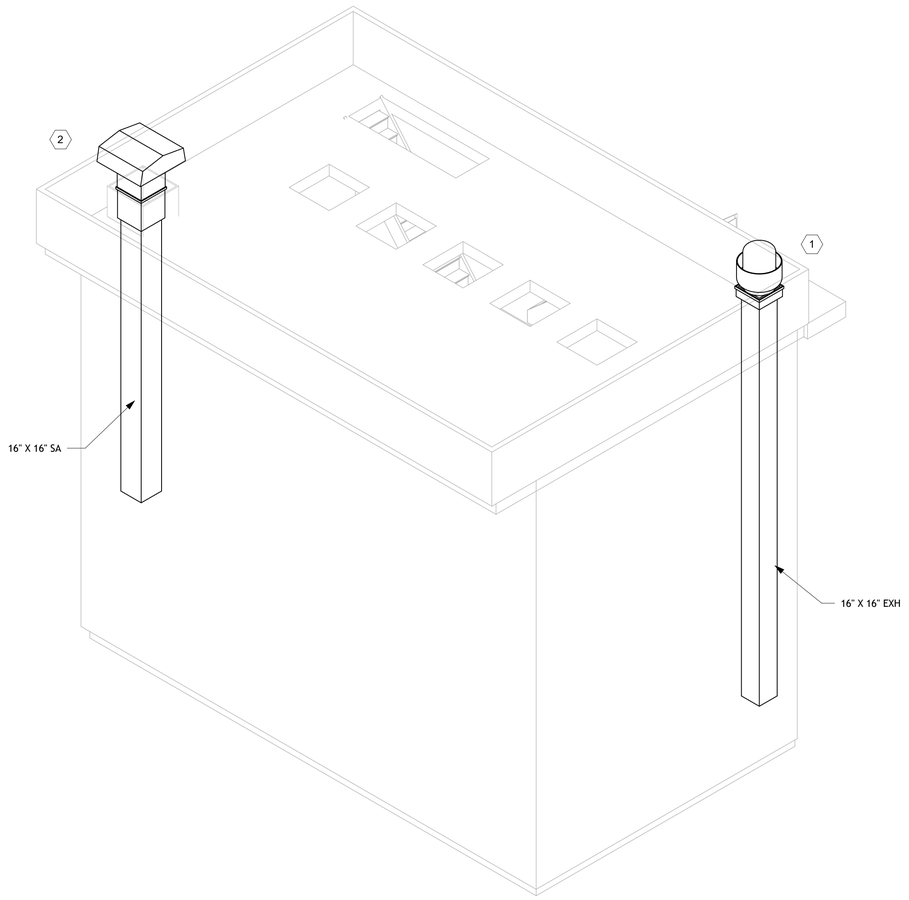

SCUM PUMP STATION PERSPECTIVE

SCALE: NONE

NO.	DATE	REVISION	APP.

KWH ENGINEERING LLC
8080 N. CENTRAL EXPRESSWAY
SUITE 1700
DALLAS, TX 75206
P: 214.453.5348
TBPELS FIRM F-17606

MBROH 20 ENGINEERING
11757 KATY FWY,
SUITE 625
HOUSTON, TX 77077
713-468-2545

SURVEYED BY:

FB NO.

INTERIM REVIEW DOCUMENTS
(NOT INTENDED FOR BIDDING, PERMIT OR CONSTRUCTION PURPOSES)
XUEFEI FENG
TEXAS REGISTRATION No: 89274
DATE: 11/02/2026

CITY OF HOUSTON
HOUSTON PUBLIC WORKS

WHITE OAKS
WWTP IMPROVEMENTS
HVAC

SCUM PUMP STATION PERSPECTIVE

WBS NUMBER	FOR CITY OF HOUSTON USE ONLY
R-000265-0158-3	
DRAWING SCALE	
NONE	
CITY OF HOUSTON, PM	
SHAHIDUR RAHMAN, PE	

Autodesk Docs://White Oaks Wastewater Treatment Plant Improvements/White Oak Bayou WWTP_ Scum Lift Station - HVAC_25.rvt

11/4/2026 5:01:10 PM

NO.	DATE	REVISION	APP.

GENERAL NOTES:

1. THE EXISTING HVAC SYSTEMS ARE SHOWN BASED ON RECORD DRAWINGS AND SITE OBSERVATION.
2. CONTRACTOR SHALL VERIFY EXISTING SYSTEM LAYOUT AND CONDITION PRIOR TO CONSTRUCTION.
3. COORDINATE HVAC DEMOLITION WITH OTHER DISCIPLINES AND NEW WORK.

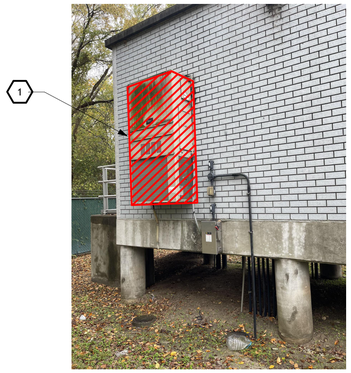

EXISTING BARD UNIT - EXTERIOR VIEW

SCALE: NONE

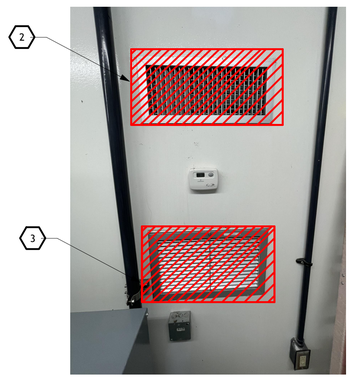

EXISTING BARD UNIT - INTERIOR VIEW

SCALE: NONE



LIFT STATION MCC BUILDING HVAC DEMOLITION PLAN

SCALE: 1/4" = 1'-0"

NOTES BY SYMBOL : ⬡

1. DEMOLISH AND REMOVE EXISTING BARD WALL-MOUNTED AIR-HANDLING UNIT, INCLUDING ASSOCIATED ELECTRICAL, CONDENSATE, AND MOUNTING HARDWARE. REUSE EXISTING WALL OPENING FOR NEW UNIT.
2. DEMOLISH AND REMOVE EXISTING SUPPLY AIR GRILLE. REUSE EXISTING WALL OPENING FOR NEW UNIT.
3. DEMOLISH AND REMOVE EXISTING RETURN AIR GRILLE. REUSE EXISTING WALL OPENING FOR NEW UNIT.

KWH ENGINEERING LLC
8080 N. CENTRAL EXPRESSWAY
SUITE 1700
DALLAS, TX 75206
P: 214.453.5348
TBPELS FIRM F-17606

MBROH 20 ENGINEERING
11757 KATY FWY,
SUITE 625
HOUSTON, TX 77077
713-468-2545

INTERIM REVIEW DOCUMENTS
(NOT INTENDED FOR BIDDING, PERMIT OR CONSTRUCTION PURPOSES)
XUEFEI FENG
TEXAS REGISTRATION No: 89274
DATE: 11/02/2026

SURVEYED BY:
FB NO.

CITY OF HOUSTON
HOUSTON PUBLIC WORKS

WHITE OAKS
WWTP IMPROVEMENTS
HVAC
LIFT STATION MCC BUILDING
DEMOLITION PLAN

WBS NUMBER	FOR CITY OF HOUSTON USE ONLY
R-000265-0158-3	
DRAWING SCALE	
1/4" = 1'-0"	
CITY OF HOUSTON, PM	
SHAHIDUR RAHMAN, PE	

Autodesk Docs://White Oaks Wastewater Treatment Plant Improvements/White Oal Bayou WWTP_lift Station Mcc Bldg-HVAC_25.rvt

11/4/2026 5:01:16 PM



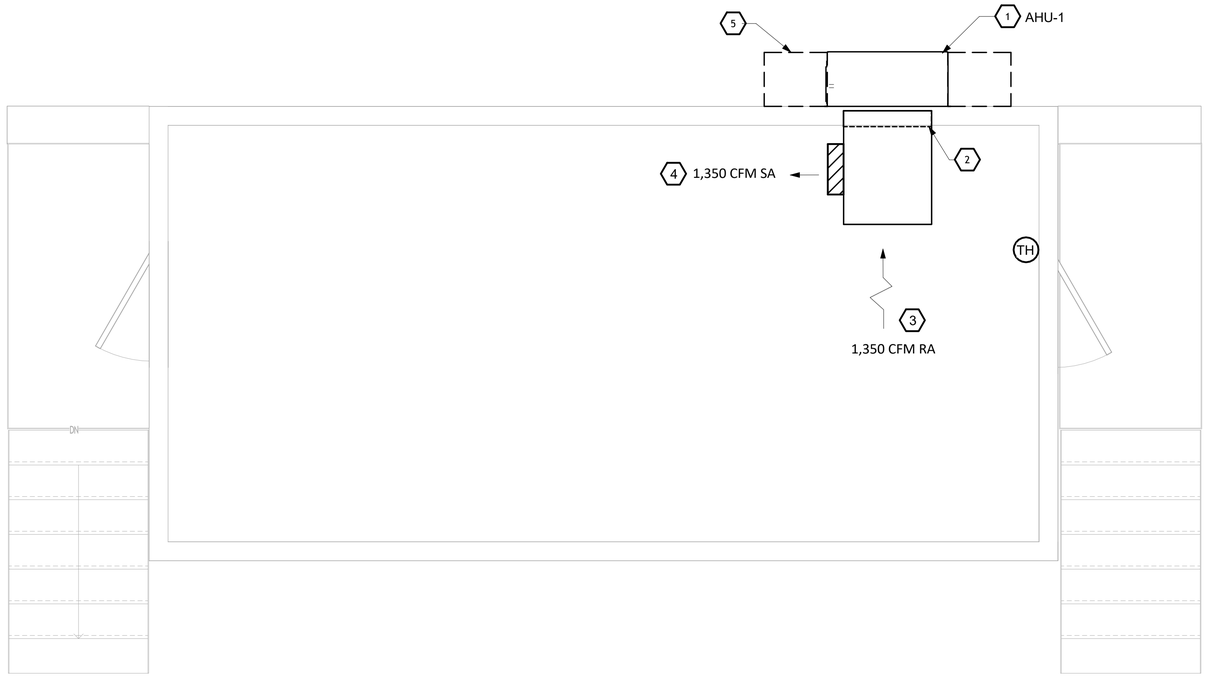

LIFT STATION MCC BUILDING HVAC NEW PLAN

SCALE: 1/4" = 1'-0"

GENERAL NOTES:

1. THE ELECTRICAL BACKGROUND IS SHOWN FOR INFORMATION ONLY. REFER TO ELECTRICAL FOR EXACT LAYOUT.
2. NO HVAC DUCTWORK OR EQUIPMENT SHALL BE MOUNTED DIRECTLY ABOVE THE ELECTRICAL EQUIPMENT. THE HVAC CONTRACTOR SHALL VERIFY THE LAYOUT OF ELECTRICAL EQUIPMENT AND COORDINATEWITH ELECTRICAL CONTRACTOR AS NEEDED PRIOR TO INSTALLATION.
3. MOUNT THERMOSTAT/HUMIDISTAT AT 5'-0" AFF.
4. REFER TO SPECIFICATION SECTION 15855 FORH2S CORROSION RESISTANCE COATING OF AIR-HANDLING UNITS.

NO.	DATE	REVISION	APP.

NOTES BY SYMBOL : ⬡

1. WALL MOUNTED PACKAGED DX HEAT PUMP AIR-HANDLING UNIT. BOTTOM OF UNITS SHALL BE AT 3'-0" ABOVE THE PLATFORM. ROUTE 1/2" CONDENSATE DRAIN FROM THE UNIT WITH A P-TRAP AND TERMINATE 1'-0" ABOVE GRASS-COVERED AREA.
2. 30"X10" SUPPLY AND 30"X16" RETURN DUCTS PENETRATE EXTERIOR WALL. REUSE EXISTING WALL-OPENINGS.
3. ALUMINUM 30"X16" RETURN GRILLE BELOW SUPPLY GRILLE.
4. ALUMINUM 30"X10" SUPPLY GRILLE AT SUPPLY AIR PLENUM.
5. CLEARANCE. DO NOT BLOCK.

KWH ENGINEERING LLC
8080 N. CENTRAL EXPRESSWAY
SUITE 1700
DALLAS, TX 75206
P: 214.453.5348
TBPELS FIRM F-17606

MBROH 20 ENGINEERING
11757 KATY FWY,
SUITE 625
HOUSTON, TX 77077
713-468-2545

SURVEYED BY:

FB NO.

INTERIM REVIEW DOCUMENTS
(NOT INTENDED FOR BIDDING, PERMIT OR CONSTRUCTION PURPOSES)
XUEFEI FENG
TEXAS REGISTRATION No: 88374
DATE: 11/02/2026

CITY OF HOUSTON
HOUSTON PUBLIC WORKS

WHITE OAKS WWTP IMPROVEMENTS

HVAC

LIFT STATION MCC BUILDING NEW PLAN

WBS NUMBER	FOR CITY OF HOUSTON USE ONLY
R-000265-0158-3	
DRAWING SCALE	
1/4" = 1'-0"	
CITY OF HOUSTON, PM	
SHAHIDUR RAHMAN, PE	

Autodesk Docs://White Oaks Wastewater Treatment Plant Improvements/White Oal Bayou WWTP_Ilft Station Mcc Bldg-HVAC_25.rvt

11/4/2026 5:17:48 PM

PLUMBING ABBREVIATIONS

@	AT
AD	AREA DRAIN
AFF	ABOVE FINISHED FLOOR
AV	ACID VENT
AW	ACID WASTE
BWV	BACKWATE VALVE
BLDG	BUILDING
℄	CENTERLINE
CA	COMPRESSED AIR
CD	CAVITY DRAIN
CI	CAST IRON
CO	CLEANOUT
CONT	CONTINUOUS, CONTINUE
CS	CUP SINK
CU FT	CUBIC FEET
CV	CHECK VALVE
CW	COLD WATER
DCO	DOUBLE CLEANOUT
DI	DUCTILE IRON
DN	DOWN
DWG	DRAWING
ECO	EXTERIOR CLEANOUT
EL	ELEVATION
ESEW	EMERGENCY SHOWER/EYE WASH
EWH	ELECTRIC WATER HEATER
FAS	FLOW ALARM SWITCH
FCO	FLUSH FLOOR CLEANOUT
FD	FLOOR DRAIN
FE	FIRE EXTINGUISHER
FS	FLOW SWITCH
FV	FIRE VALVE
G	GAS
GPM	GALLONS PER MINUTE
HB	HOSE BIBB
HEV	HOSE END VALVE
INV	INVERT
IOS	INSTALLED BY OTHER SECTION
IPS	IRON PIPE SIZE
LAV	LAVATORY
LBV	LOCKABLE BALL VALVE
LS	LAB SINK
MAX	MAXIMUM
MIN	MINIMUM
MR	MOP RECEPTOR
MS	MOP RECEPTOR
NG	NATURAL GAS
NO	NUMBER, NORMALLY OPEN
NPW	NON-POTABLE WATER
NPWT	TEMPERED NON-POTABLE WATER
OED	OPEN END OR OPEN EQUIPMENT DRAIN
P	PROTECTED WATER
PCW	POTABLE COLD WATER
PD	PUMP DISCHARGE
PG	PRESSURE GAUGE
PHW	POTABLE HOT WATER
PP	POLYPROPYLENE
PRW	PRESSURE WASTE
PSI	POUNDS PER SQUARE INCH
P&T	PRESSURE & TEMPERATURE
PVC	POLYVINYL CHLORIDE
PW	PLANT WATER
RD	ROOF DRAIN
RL	RAINLEADER
RM	ROOM
RPZ	REDUCED PRESSURE ZONE BACKFLOW PREVENTER
S	SOIL
SH	SHOWER
SHT	SHEET
SP	SPRINKLER
SQ	SQUARE
SS	SANITARY SEWER
SSK	SERVICE SINK
STL	STEEL
TD	TRENCH OR TROUGH DRAIN
THK	THICK(NESS)
TW	TEMPERED WATER
TWH	TANKLESS WATER HEATER
TWR	TEMPERED WATER RETURN
TYP	TYPICAL
V	VENT
VAC	VACUUM
VB	VACUUM BREAKER
VE	VACUUM EXHAUST
VTR	VENT THROUGH ROOF
W	WASTE
W/	WITH
WC	WATER CLOSET
WCO	WALL CLEANOUT
WF	WASH FOUNTAIN
WH	WALL HYDRANT
WHS	WASH HOSE STATION
W&V	WASTE & VENT

SYMBOLS

- CAP
- BOTTOM CONNECTION
- TOP CONNECTION
- ELBOW UP
- ELBOW DOWN
- P-TRAP
- TEE
- TEE UP
- TEE DOWN
- STRAINER (Y-TYPE)
- BALL VALVE
- CHECK VALVE
- WATER PRESSURE REDUCING VALVE
- BACKFLOW PREVENTER
- CLEANOUTS
- HOSE BIBB
- FLOOR CLEANOUT
- DOUBLE CLEANOUT
- WATER PROOF SLEEVE
- FLOOR DRAIN
- HUB DRAIN
- HOSE REEL
- EMERGENCY SHOWER/EYEWASH STATION
- FLOW ALARM SWITCH
- CONNECTION POINT NEW TO EXISTING
- FLOW DIRECTION
- DETAIL NUMBER
- DRAWING WHERE DETAIL IS SHOWN

NOTE: THIS IS A GENERAL LIST OF SYMBOLS AND ABBREVIATIONS. NOT ALL ITEMS SHOWN HERE APPEAR ON THE CONTRACT DRAWINGS.

PIPING MATERIAL CODES

ALU	ALUMINUM
CPVC	CHLORINATED POLYVINYL CHLORIDE
CU	COPPER
FRP	FIBERGLASS REINFORCED PLASTIC
GS	GALVANIZED STEEL
PVC	POLYVINYL CHLORIDE
PWHDPE	PROFILE WALL HIGH DENSITY POLYETHYLENE BLACK
STL	STEEL
SS	STAINLESS STEEL

PLUMBING GENERAL NOTES

1. THE PLUMBING GENERAL NOTES APPLY TO ALL PLUMBING DRAWINGS WITHIN THESE CONSTRUCTION DOCUMENTS.
2. PLUMBING DRAWINGS ARE IN PART DIAGRAMMATIC AND INTENDED TO SHOW THE SCOPE AND GENERAL ARRANGEMENT OF THE WORK UNDER THIS CONTRACT. CONTRACTOR SHALL FOLLOW THESE DRAWINGS IN LAYING OUT THE EQUIPMENT AND PIPING. DRAWINGS ARE NOT INTENDED TO BE SCALED FOR ROUGHING IN MEASUREMENTS NOR TO SERVE AS SHOP DRAWINGS. WHERE JOB CONDITIONS REQUIRE MINOR CHANGES OR ADJUSTMENTS IN THE INDICATED LOCATIONS OR ARRANGEMENT OF THE WORK, SUCH CHANGES SHALL BE MADE WITHOUT CHANGE IN THE CONTRACT AMOUNT.
3. THE CONTRACTOR SHALL VISIT THE JOB SITES TO FAMILIARIZE THEMSELVES WITH ALL CONDITIONS AFFECTING THE WORK AND TO COORDINATE THE WORK WITH OTHER CONTRACTORS ON THE PROJECT. CONTRACTOR SHALL VERIFY ALL DIMENSIONS PRIOR TO FABRICATION AND INSTALLATION OF PIPING AND EQUIPMENT.
4. EQUIPMENT INDICATED IN THE DRAWINGS, TOGETHER WITH ITS ROUGH-INS AND ELECTRICAL SERVICE ARE BASED ON THE MAKE AND MODEL INDICATED IN THE EQUIPMENT SCHEDULE OR IN THESE SPECIFICATIONS. SHOULD CONTRACTOR SELECT AN EQUIVALENT ALTERNATE MAKE OF EQUIPMENT, EVEN IF APPROVED BY THE OWNER AS EQUAL, CONTRACTOR SHALL COORDINATE AND MAKE THE MODIFICATIONS IN THE WORK WITHOUT ANY CHANGE IN CONTRACT AMOUNT.
5. UNLESS OTHERWISE SHOWN ON DRAWINGS OR SPECIFIED HEREIN, PRODUCTS USED IN THE WORK SHALL BE INSTALLED IN ACCORDANCE WITH MANUFACTURER'S INSTALLATION INSTRUCTIONS AND RECOMMENDATIONS. ANY CHANGES OR MODIFICATIONS PROPOSED BY CONTRACTOR WHICH THEY BELIEVE WILL IMPROVE THE INSTALLATION SHALL BE APPROVED BY THE OWNER/AND/OR ITS REPRESENTATIVE.
6. UTILITIES ARE SHOWN IN APPROXIMATE LOCATIONS ONLY. THE CONTRACTOR SHALL DETERMINE THE EXACT LOCATION, SIZE, AND CAPACITY OF ALL UTILITIES BEFORE COMMENCING WORK AND COORDINATE WITH SITE CONTRACTOR. THE CONTRACTOR SHALL BE RESPONSIBLE FOR BRINGING ADEQUATE UTILITIES TO SPACE AS NECESSARY TO ENSURE SPECIFIED SYSTEM PERFORMANCE. REFER TO CIVIL PLANS FOR ADDITIONAL INFORMATION.
7. COORDINATE CONSTRUCTION OF ALL PLUMBING WORK WITH ARCHITECTURAL, STRUCTURAL, ELECTRICAL, HVAC, MECHANICAL, ETC. WORK SHOWN ON OTHER CONTRACT DOCUMENTS.
8. EVERY FIXTURE, DEVICE, APPARATUS, OR PIECE OF EQUIPMENT WHICH CONVEYS, USES, OR IS ACTIVATED BY POTABLE WATER SHALL BE OF SUCH DESIGN AND BE INSTALLED IN SUCH A MANNER THAT THE DOMESTIC WATER SYSTEM IS PROTECTED AGAINST CONTAMINATION.
9. PROVIDE VACUUM BREAKERS OR CHECK VALVES ON ALL FIXTURES OR EQUIPMENT AS REQUIRED BY AUTHORITY HAVING JURISDICTION.
10. PROVIDE ACCESS DOORS FOR ALL VALVES IN ACCESSIBLE LOCATIONS.
11. PROVIDE PROPER SLEEVING AND SEALANT FOR ALL PIPING PENETRATIONS THROUGH OUTSIDE WALLS.
12. ALL MISCELLANEOUS STEEL REQUIRED TO ENSURE PROPER INSTALLATION AS SHOWN IN DETAILS FOR PIPING, AND EQUIPMENT (UNLESS NOTED OTHERWISE OR WITHIN STRUCTURAL DOCUMENTS) SHALL BE FURNISHED AND INSTALLED BY MECHANICAL CONTRACTOR.
13. ALL EQUIPMENT, PIPING, ETC. SHALL BE SUPPORTED AS DETAILED, SPECIFIED, AND REQUIRED.
14. ALL PIPING, AND EQUIPMENT SUPPORTED FROM STRUCTURAL STEEL SHALL BE COORDINATED WITH GENERAL CONTRACTOR. ALL ATTACHMENTS TO STEEL BAR JOISTS, TRUSSES, OR JOIST GIRDERS SHALL BE AT PANEL POINTS. PROVIDE PIPE SUPPORTS THAT MEET MSS STANDARDS. WELDING TO STRUCTURAL MEMBERS SHALL NOT BE PERMITTED.
15. UNLESS NOTED OTHERWISE, ALL PIPING SHOWN AS OVERHEAD IS TIGHT TO UNDERSIDE OF STRUCTURE (OR WITHIN OPEN JOISTS) WITH SPACE FOR INSULATION IF REQUIRED.
16. PROVIDE DIELECTRIC UNION OR OTHER PROTECTION WHEN TWO DISSIMILAR METALS COME IN CONTACT.

NO.	DATE	REVISION	APP.

KWH ENGINEERING LLC
8080 N. CENTRAL EXPRESSWAY
SUITE 1700
DALLAS, TX 75206
P: 214.453.5348
TBPELS FIRM F-17606

MBROH 20 ENGINEERING
11757 KATY FWY,
SUITE 625
HOUSTON, TX 77077
713-468-2545

SURVEYED BY:
FB NO.

XUEFEI FENG
TEXAS REGISTRATION No: 88274
DATE: 11/02/2026

INTERIM REVIEW DOCUMENTS
(NOT INTENDED FOR BIDDING, PERMIT OR CONSTRUCTION PURPOSES)

CITY OF HOUSTON
HOUSTON PUBLIC WORKS

WHITE OAKS WWTP IMPROVEMENTS

PLUMBING

LEGENDS SYMBOLS AND ABBREVIATIONS

WBS NUMBER	FOR CITY OF HOUSTON USE ONLY
R-000265-0158-3	
DRAWING SCALE	
NONE	
CITY OF HOUSTON, PM	
SHAHIDUR RAHMAN, PE	
SHEET NO. 122 OF 189	

P-01

Autodesk Docs://White Oaks Wastewater Treatment Plant Improvements/White Oak Bayou WWTP_Admin Bldg HVAC_25.rvt

11/4/2026 5:30:46 PM

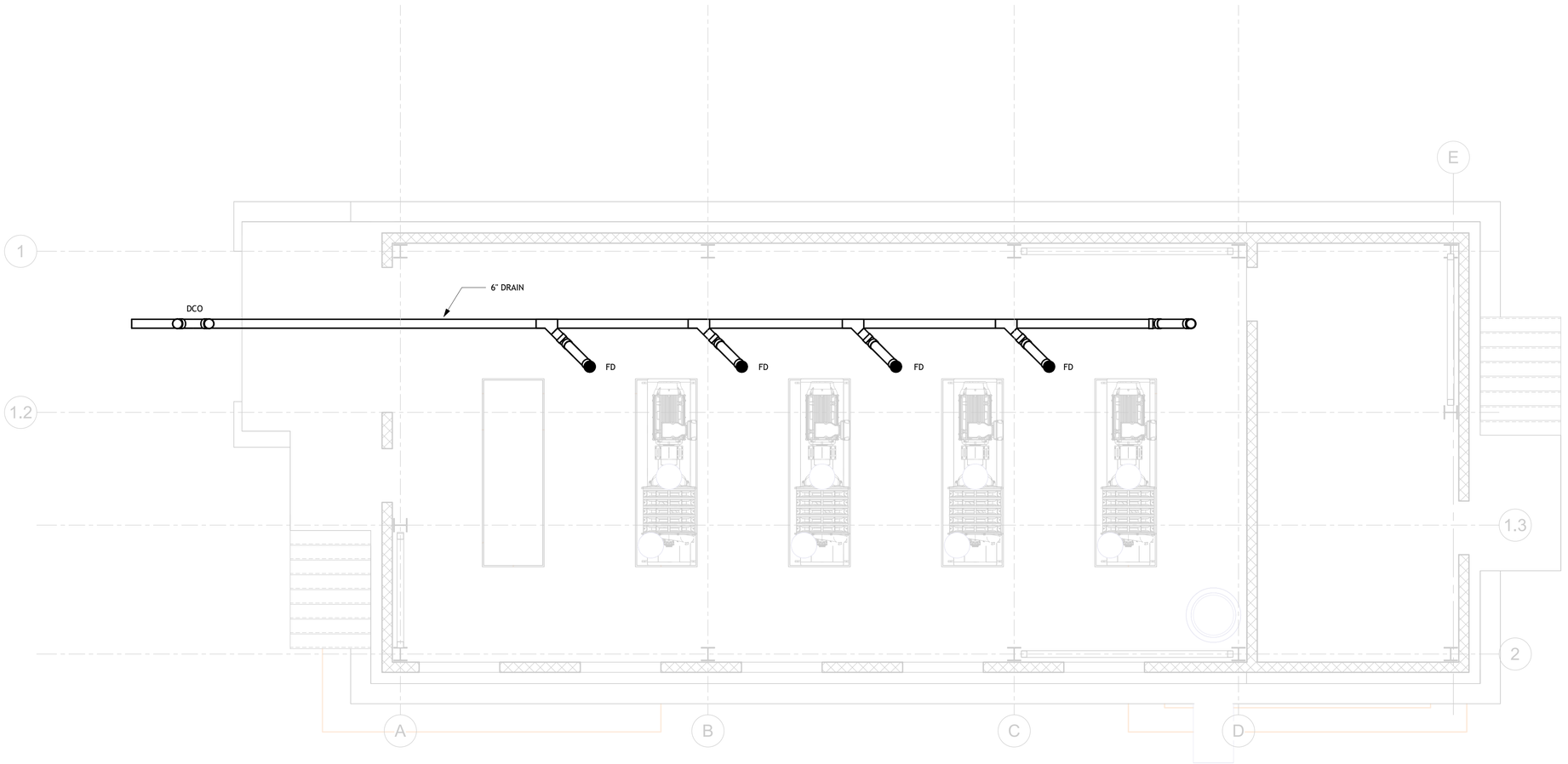

1 PLUMBING FLOOR PLAN
1/4" = 1'-0"

4 2 0 4 8
SCALE: 1/4"=1'-0"

GENERAL NOTES:

1. ARCHITECTURAL, STRUCTURAL, AND PROCESS MECHANICAL BACKGROUNDS ARE SHOWN FOR REFERENCE ONLY. REFER TO ARCHITECTURAL, STRUCTURAL, AND PROCESS MECHANICAL DRAWINGS FOR DETAILS.

NO.	DATE	REVISION	APP.

KWH ENGINEERING LLC
8080 N. CENTRAL EXPRESSWAY
SUITE 1700
DALLAS, TX 75206
P: 214.453.5348
TBPELS FIRM F-17606

MBROH 20 ENGINEERING
11757 KATY FWY,
SUITE 625
HOUSTON, TX 77077
713-468-2545

SURVEYED BY:
FB NO.

INTERIM REVIEW DOCUMENTS
NOT INTENDED FOR BIDDING, PERMIT OR CONSTRUCTION PURPOSES)
SUEFEI FENG
TEXAS REGISTRATION No: 89274
DATE: 11/02/2026

CITY OF HOUSTON
HOUSTON PUBLIC WORKS

WHITE OAKS WWTP IMPROVEMENTS

PLUMBING

BLOWER BUILDING DRAINAGE PLAN

WBS NUMBER	FOR CITY OF HOUSTON USE ONLY
R-000265-0158-3	
DRAWING SCALE	
1/4" = 1'-0"	
CITY OF HOUSTON, PM	
SHAHIDUR RAHMAN, PE	

P-02 SHEET NO. 123 OF 189

Autodesk Docs://White Oaks Wastewater Treatment Plant Improvements/20031-20-H_Rev. 25.rvt

11/4/2026 5:17:48 PM

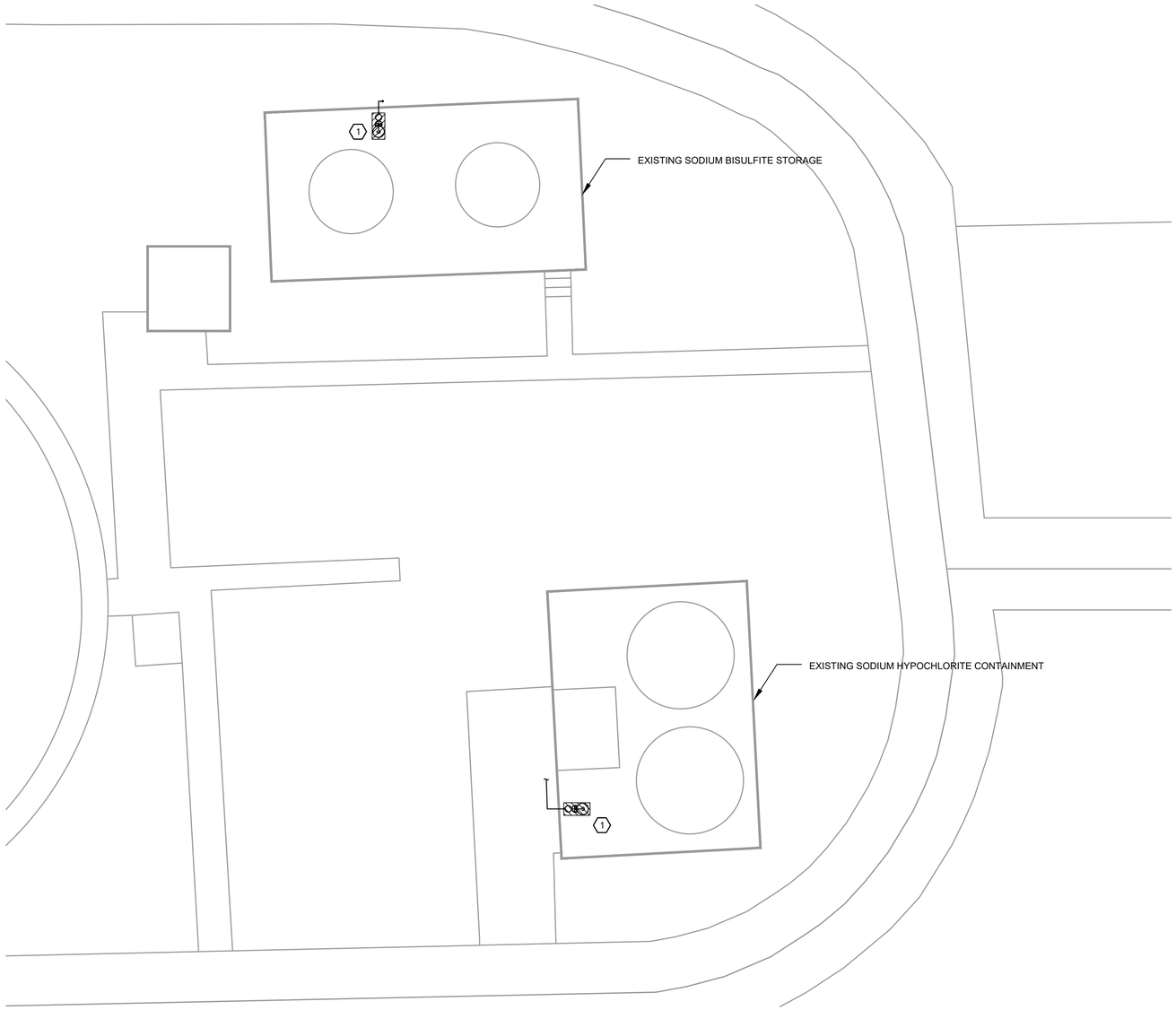

PLUMBING DEMOLITION PLAN
1/8" = 1'-0"

GENERAL NOTES:

1. THE SITE LAYOUT BACKGROUND IS SHOWN FOR INFORMATION ONLY. CONTRACTOR SHALL FIELD VERIFY EXISTING LAYOUTS AND CONDITIONS PRIOR TO CONSTRUCTION. COORDINATE WITH OTHER UTILITIES IN THE AREA.
2. CONTRACTOR SHALL TAKE ALL THE NECESSARY PRECAUTIONS REQUIRED TO PROTECT THE EXISTING FACILITIES FROM DAMAGE. ANY DAMAGE TO EXISTING FACILITIES INCURRED AS RESULT OF CONSTRUCTION SHALL BE CORRECTED AT THE CONTRACTORS EXPENSE.
3. THE DEMOLITION AND REMOVAL OF EXISTING EMERGENCY EYE WASH/SHOWER SHALL BE COORDINATED WITH THE CONSTRUCTION SCHEDULE OF NEW WORK AND THE DEMOLITION WORK OF OTHER DISCIPLINES. REFER TO XXX FOR INSTALLATION OF NEW EMERGENCY EYE WASH/SHOWER.
4. ALL EXISTING WATER PIPING SHALL REMAIN UNLESS NOTICED OTHERWISE.

KEY NOTES:

1. DEMOLISH AND REMOVE EXISTING EMERGENCY EYEWASH/SHOWER AS SHOWN. DISCONNECT EXISTING POTABLE WATER PIPING AND CAP AT POINT OF CONNECTION FOR NEW EMERGENCY EYEWASH/SHOWER INSTALLATION. FIELD VERIFY EXACT LOCATION OF EXISTING EQUIPMENT AND PIPING PRIOR TO DEMOLITION.

NO.	DATE	REVISION	APP.

KWH ENGINEERING LLC
8080 N. CENTRAL EXPRESSWAY
SUITE 1700
DALLAS, TX 75206
P: 214.453.5348
TBPELS FIRM F-17606

MBROH ENGINEERING
11757 KATY FWY,
SUITE 625
HOUSTON, TX 77077
713-468-2545

INTERIM REVIEW DOCUMENTS
(NOT INTENDED FOR BIDDING, PERMIT OR CONSTRUCTION PURPOSES)
XUEFEI FENG
TEXAS REGISTRATION No: 89274
DATE: 11/02/2026

SURVEYED BY:
FB NO.

CITY OF HOUSTON
HOUSTON PUBLIC WORKS

WHITE OAKS WWTP IMPROVEMENTS

PLUMBING

CHEMICAL STORAGE DEMOLITION PLAN

WBS NUMBER	FOR CITY OF HOUSTON USE ONLY
R-000265-0158-3	
DRAWING SCALE	
1/8" = 1'-0"	
CITY OF HOUSTON, PM	
SHAHIDUR RAHMAN, PE	

P-03 SHEET NO. 124 OF 189

Autodesk Docs://White Oaks Wastewater Treatment Plant Improvements/White Oak Bayou WWTP_Admin Bldg-HVAC_25.rvt

11/4/2026 5:17:48 PM

Autodesk Docs://White Oaks Wastewater Treatment Plant Improvements/White Oak Bayou WWTP_Admin Bldg-HVAC_25.rvt

GENERAL NOTES:

1. REFER TO DRAWING XX-P--1 FOR PLUMBING DEMOLITION. COORDINATE THE SCHEDULE OF NEW WORK WITH DEMOLITION SCHEDULE.
2. REFER TO ELECTRICAL DRAWING FOR HEAT TRACING OF EXTERIOR TEPID WATER PIPING.

KEY NOTES:

1. FREEZE PROOF EMERGENCY EYE WASH/SHOWER WITH HEAT TRACE. INSTALL EYE WASH/SHOWER ON 9"(L)X9"(W)X6"(H) CONCRETE PAD FOR CORROSION RESISTANCE. REFER TO STRUCTURAL DRAWING FOR CONCRETE PAD DETAIL.
2. ELECTRIC TANKLESS WATER HEATER.
3. 1-1/4" TEPID WATER PIPING CONNECTS TO EMERGENCY EYE WASH/SHOWER. .

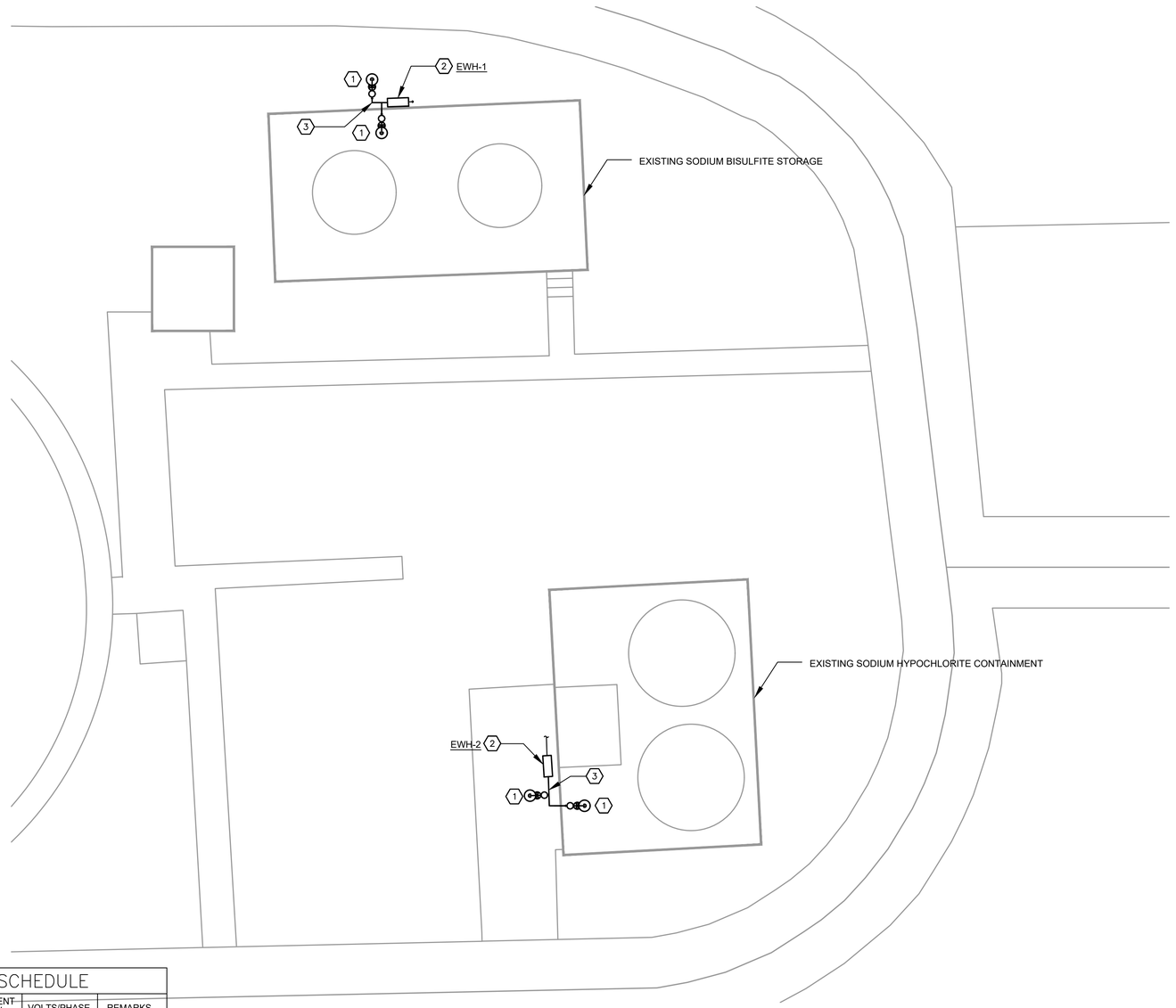

PLUMBING NEW PLAN
1/8" = 1'-0"

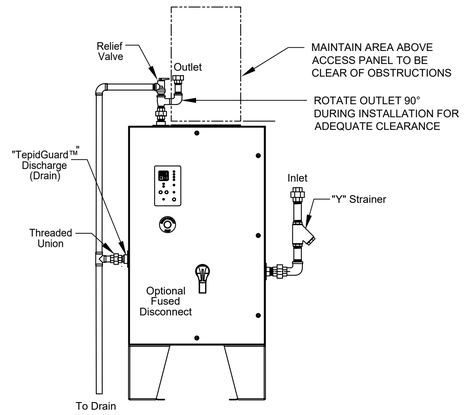

INSTANTANEOUS ELECTRIC HOT WATER HEATER
2 SCALE : N.T.S.

INSTANTANEOUS WATER HEATER SCHEDULE

MARK	SERVES	MANUFACTURER	MODEL	FLOW C.A.P. GPM	°F. RISE	ELEMENT-KW	VOLTS/PHASE	REMARKS
EWH-1,2	EMERGENCY EYE WASH/SHOWER	KELTECH	SNA-1083	20	35°F	108	460/3	1,2,3,4

NOTES:
1. THE HEATER SHALL BE UL LISTED, TANKLESS WITH REMOVABLE COVER, REPLACEABLE HEATING ELEMENT, IMMERSION-TYPE THERMOSTAT, REPLACEABLE INLET FILTER, AND FLOW REGULATOR.
1. PROVIDE FREEZE PROTECTION TO MINUS 20 DEG. F. PROVIDE THERMOSTATICALLY CONTROLLED FORCED AIR HEATER TO MAINTAIN INTERNAL TEMPERATURES ABOVE FREEZING.
2. PROVIE GROUND FAULT PROTECTION.
3. THE CABINET ENCLOSURE SHALL BE FLOOR-MOUNTED, INTERNALLY INSULATED 316 STAINLESS CABINET RATED AS NEMA 4X.
4. PROVIDE CONTROLLER-LOCKED TEMPERATURE SETTING WITH OUTPUT WATER TEMPERATURE FIXED AT 80 DEG. F.
5. PROVIDE ANTI-SCALD PROTECTIONS TO ENSURE THE WATER TEMPERATURE NOT TO EXCEED 100 DEG. F.

NO.	DATE	REVISION	APP.

KWH ENGINEERING LLC
8080 N. CENTRAL EXPRESSWAY
SUITE 1700
DALLAS, TX 75206
P: 214.453.5348
TBPELS FIRM F-17606

MBROH 20 ENGINEERING
11757 KATY FWY,
SUITE 625
HOUSTON, TX 77077
713-468-2545

INTERIM REVIEW DOCUMENTS
(NOT INTENDED FOR BIDDING, PERMIT OR CONSTRUCTION PURPOSES)
XUEFEI FENG
TEXAS REGISTRATION No: 89274
DATE: 11/02/2026

SURVEYED BY:
FB NO.

CITY OF HOUSTON
HOUSTON PUBLIC WORKS

WHITE OAKS
WWTP IMPROVEMENTS
PLUMBING

CHEMICAL STORAGE
NEW PLAN

WBS NUMBER	FOR CITY OF HOUSTON USE ONLY
R-000265-0158-3	
DRAWING SCALE	
1/8" = 1'-0"	
CITY OF HOUSTON, PM	
SHAHIDUR RAHMAN, PE	
SHEET NO. 125 OF 189	

P-04

PLOTTED: 05/11/2026
PLOT STYLE: ----
FILE PATH: P:\Projects\0106 - City Of Houston\20031 - White Oak WWTP Phase II\4.0 CAD\4.2 Electrical\E-01 GENERAL NOTES.dwg

ELECTRICAL GENERAL NOTES

1. THE NOTES CONTAINED ON THIS SHEET ARE PROVIDED FOR THE CONVENIENCE OF THE CONTRACTOR WHEN WORKING IN THE FIELD, AND CONTAIN EXCERPTS FROM THE SPECIFICATION SECTIONS. HOWEVER THE CONTRACTOR IS HEREBY ADVISED THAT THE CONTRACT DOCUMENTS CONSIST OF BOTH THE DRAWINGS AND THE SPECIFICATIONS, AND THAT THE CONTRACTOR MUST COMPLY FULLY WITH BOTH THE BOUND DRAWINGS AND THE BOUND SPECIFICATIONS.

2. ALL EQUIPMENT WIRING, RACEWAYS, ETC. SHALL BE INSTALLED AND GROUNDED IN ACCORDANCE WITH THE LATEST EDITION OF THE NATIONAL ELECTRICAL CODE, LOCAL CODES, AND INDUSTRY STANDARDS (IE. UL, NEMA, IEEE, ANSI, ETC.) THE DRAWING NOTES AND DETAILS SHALL BE COMPLIED WITH IN ADDITION TO THE REQUIREMENTS IN THE SPECIFICATIONS. REFER TO EACH SPECIFICATION SECTION FOR SPECIFIC REQUIREMENTS.

3. ALL RACEWAY INSTALLATIONS SHALL BE INSTALLED IN A MANNER TO PREVENT CONFLICTS WITH EQUIPMENT AND STRUCTURAL CONDITIONS. ALL EXPOSED RACEWAY SHALL BE INSTALLED PARALLEL TO BEAMS, CEILINGS, FLOORS AND WALLS. SEE SECTION 16110 FOR ADDITIONAL REQUIREMENTS.

4. CONDUITS SHALL BE TERMINATED IN A NEAT MANNER AND STRICTLY IN ACCORDANCE WITH THE SPECIFICATIONS AND DRAWING DETAILS. SEE SECTION 16110 FOR ADDITIONAL REQUIREMENTS.

5. CONDUITS TERMINATED INTO ENCLOSURES SHALL BE PERPENDICULAR TO THE WALLS OF THE ENCLOSURE. THE USE OF SHORT SEALTIGHT ELBOW FITTINGS FOR SUCH TERMINATIONS WILL NOT BE PERMITTED.

6. ALL RACEWAY INSTALLATIONS, CROSSING EXPANSION JOINTS OR TRANSITIONS FROM BELOW GRADE TO EXPOSED ABOVE GRADE, SHALL HAVE EXPANSION OR EXPANSION/DEFLECTION TYPE FITTINGS AS SPECIFIED FOR THE APPLICATION. SEE THE DRAWINGS AND SECTION 16110 FOR THE EXACT TYPE OF FITTING TO BE USED.

7. NO CONDUIT SMALLER THAN 3/4", NOR WIRE SMALLER THAN NO. 12 AWG, SHALL BE USED UNLESS SPECIFICALLY NOTED.

8. ALL UNDERGROUND SINGLE CONDUITS, AND DUCTBANKS OF MULTIPLE CONDUITS, SHALL BE RIGID PVC CONDUIT, ENCASED IN REINFORCED RED CONCRETE, AND THE CONCRETE DYED RED BEFORE PLACEMENT, AS SPECIFIED IN SECTION 16110. MINIMUM SIZE SHALL BE 2 INCH. THE CONTRACTOR SHALL FIELD VERIFY THE ROUTING OF ALL EXISTING UNDERGROUND CONDUIT AND DUCTBANKS AND SHALL COORDINATE THE ROUTING OF NEW CONDUIT AND DUCTBANKS TO AVOID INTERFERENCE WITH EXISTING CONDUIT AND DUCTBANKS AND OTHER UNDERGROUND UTILITIES.

9. ALL CHANGES OF DIRECTION GREATER THAN 20 DEGREES IN UNDERGROUND SINGLE, OR DUCTBANKS OF MULTIPLE CONDUITS, SHALL BE ACCOMPLISHED USING PVC COATED RIGID ALUMINUM LONG RADIUS BENDS. BENDS OF PVC CONDUIT GREATER THAN 20 DEGREES, OR THE USE OF FLEXIBLE CONDUIT OF ANY TYPE, WILL NOT BE PERMITTED. SEE SECTION 16110 FOR MORE REQUIREMENTS.

10. LIQUID TIGHT FLEXIBLE ALUMINUM CONDUIT SHALL BE USED FOR THE PRIMARY AND SECONDARY OF TRANSFORMERS, GENERATOR TERMINATIONS AND OTHER EQUIPMENT WHERE VIBRATION IS PRESENT. USE IN OTHER LOCATIONS IS NOT PERMITTED, EXCEPT FOR CONNECTIONS TO INSTRUMENTATION TRANSMITTERS, WHERE MULTIPLE PENETRATIONS ARE REQUIRED. LIQUID TIGHT FLEXIBLE ALUMINUM CONDUIT SHALL HAVE A MAXIMUM LENGTH NOT GREATER THAN THAT OF A FACTORY MANUFACTURED LONG RADIUS ELBOW OF THE CONDUIT SIZE BEING USED. THE MAXIMUM BENDING RADIUS SHALL NOT BE LESS THAN THAT SHOWN IN THE NEC CHAPTER 9, TABLE 2, "OTHER BENDS". BX OR AC TYPE PREFABRICATED CABLES WILL NOT BE PERMITTED.

11. THE WIRING DIAGRAMS, BLOCK DIAGRAMS, QUANTITY, SIZE OF WIRES, AND CONDUIT REPRESENT A SUGGESTED ARRANGEMENT BASED UPON SELECTED STANDARD COMPONENTS OF ELECTRICAL EQUIPMENT. MODIFICATIONS ACCEPTABLE TO THE ENGINEER MAY BE MADE BY THE CONTRACTOR TO ACCOMMODATE EQUIPMENT ACTUALLY APPROVED. ALL MODIFICATIONS SHALL BE SUBMITTED TO THE ENGINEER FOR APPROVAL. THE BASIC SEQUENCE AND METHOD OF CONTROL MUST BE MAINTAINED AS INDICATED ON THE DRAWINGS AND/OR SPECIFIED.

12. FOR ALL JUNCTION BOXES, PULL BOXES AND TERMINATION BOXES IN THE RACEWAY SYSTEM IN NEMA 12 AREAS, BOXES SHALL BE OF ALUMINUM. FOR NEMA 4X AREAS SEE SECTION 16110 FOR BOX DETAILS AND SPECIFICATIONS.

13. WHERE RACEWAYS ENTER JUNCTION BOXES OR CONTROL PANELS CONTAINING ELECTRICAL OR INSTRUMENTATION EQUIPMENT, ALL ENTRANCES SHALL BE SEALED WITH WATERTIGHT SEALANT. REFER TO SECTION 16110 FOR DETAILS.

14. ALL EQUIPMENT AND ELECTRICAL EQUIPMENT ENCLOSURE LOCATIONS, OR TERMINAL BOX LOCATIONS, ARE APPROXIMATE. THE EXACT LOCATIONS SHALL BE COORDINATED WITH AND APPROVED BY THE OWNER/ENGINEER, DURING CONSTRUCTION, AT NO ADDITIONAL COST TO THE OWNER.

15. ALL EQUIPMENT AND ELECTRICAL EQUIPMENT ENCLOSURES DIMENSIONS ARE APPROXIMATE. ALL EQUIPMENT AND ELECTRICAL EQUIPMENT ENCLOSURES OR TERMINAL BOX DIMENSIONS SHALL BE VERIFIED WITH THE EQUIPMENT SUPPLIER. ALLOW FOR LOCATION CHANGES AND INCLUDE IN THE CONTRACT PRICE. THE EXACT LOCATIONS OF ALL ELECTRICAL EQUIPMENT AND ROUTING OF ALL CABLES AND CONDUITS SHALL BE COORDINATED WITH AND APPROVED BY THE OWNER ENGINEER DURING CONSTRUCTION.

16. CORING OF AN EXISTING STRUCTURE SHALL BE COORDINATED WITH AND APPROVED BY THE OWNER/ENGINEER. CORING THROUGH STRUCTURAL BEAMS IS STRICTLY PROHIBITED, WITHOUT PRIOR WRITTEN APPROVAL FROM THE OWNER/ENGINEER.

17. THE LOCATION OF ALL ELECTRICAL EQUIPMENT AND ROUTING OF CABLES AND CONDUITS SHALL BE COORDINATED AND APPROVED BY THE OWNER.

18. THE DUCTBANK ROUTING AS SHOWN ON THE DRAWING IS APPROXIMATE. THE EXACT DUCTBANK ROUTING, CABLE LENGTH AND CONDUIT LENGTH SHALL BE VERIFIED IN THE FIELD.

19. PROVIDE CONDUIT SEALS FOR CONDUIT PENETRATIONS. SEE SECTION 16110 FOR DETAILS.

20. THIS IS AN OPERATING FACILITY. THE CONTRACTOR SHALL COORDINATE ALL WORK WITH THE OWNER.

21. THE CONTRACTOR SHALL BE RESPONSIBLE TO LOCATE ALL UNDERGROUND UTILITIES BEFORE DIGGING. CONTRACTOR SHALL COORDINATE THE EFFORT WITH THE OWNER.

22. ALL SLOTTED CHANNEL, SLOTTED CHANNEL SUPPORT MATERIAL, WASHERS, SCREWS, NUTS, CONDUIT CLAMPS, ALL THREAD SPRING NUTS AND MISC. MOUNTING HARDWARE SHALL BE 316 STAINLESS STEEL.

23. ALL CONDUITS AND WIRES SHOWN ON THE INTERFACE DIAGRAM SHALL BE INSTALLED BY THE CONTRACTOR. GROUPING OF CONDUIT AND WIRE MAY BE CHANGED, IF APPROVED BY THE ENGINEER AND OWNER.

24. ALL CONDULETS SHALL BE FORM 7 AND SHALL HAVE 316 SS CLAMP COVERS WITH 316 SS CLAMPS AND SCREWS. SCREW DOWN COVERS ARE UNACCEPTABLE. REFER TO SECTION 16110 FOR MORE DETAILS.

25. ALL BARE COPPER GROUNDING CONDUCTORS SHALL BE TINNED, ALL GROUND RODS SHALL BE COPPER CLAD STEEL, 3/4" BY 10' LONG. ALL EXPOSED COPPER GROUND CABLES SHALL BE GREEN INSULATED CONDUCTORS. PROVIDE XHHW INSULATION.

ELECTRICAL GENERAL NOTES CONT'D

26. WHERE NOTES ON THE DRAWING INDICATE THAT THE CONTRACTOR SHALL FIELD-VERIFY, THE INTENT IS FOR THE CONTRACTOR TO INVESTIGATE TO THE EXTENT NECESSARY TO PROVIDE THE WORK AND MATERIALS PRIOR TO BIDDING AND INCLUDE ALL COSTS IN THE BID PRICE. THE CONTRACT PRICE SHALL NOT BE INCREASED WHEN THE CONTRACTOR HAS NOT INVESTIGATED PER THE NOTES DIRECTING THAT BE DONE.

27. ALL DIMENSIONS OF ELECTRICAL EQUIPMENT ARE BASED ON GE INDUSTRIAL SOLUTIONS DESIGN.

DEMOLITION NOTES

1. THE CONTRACTOR SHALL COORDINATE THE DEMOLITION OF THE ELECTRICAL CONDUIT, WIRE, EQUIPMENT AND DEVICES WITH THE GENERAL DEMOLITION AND SCHEDULE. THE DRAWINGS ARE INTENDED TO CONVEY THE GENERAL NATURE AND SCOPE OF THE DEMOLITION WORK. EVERY ITEM TO BE DEMOLISHED MAY NOT BE SHOWN. FIELD VERIFY WITH OWNER PRIOR TO BID, AND INCLUDE ALL DEMOLITION WORK IN THE CONTRACT PRICE.

2. PROVIDE TEMPORARY WIRE AND CONDUIT FOR THE EQUIPMENT WHICH MAY BE AFFECTED BY THE DEMOLITION BUT TO REMAIN IN SERVICE.

3. RELOCATE AND RECONNECT POWER AND CONTROL RACEWAYS AND CONDUCTORS TO EQUIPMENT AFFECTED BY DEMOLITION WORK.

4. ALL CONDUCTORS BEING DEMOLISHED SHALL BE DISCONNECTED AND REMOVED FROM THE LOAD TO THE SOURCE. SURFACE MOUNTED CONDUITS AND MOUNTING HARDWARE SHALL BE REMOVED. UNDERGROUND CONDUITS WHICH ARE NOT BEING REMOVED OR OTHERWISE NOT BEING MADE UNUSABLE SHALL BE CAPPED AND TAGGED AS SPARE, WITH INFORMATION CLEARLY INDICATING THE LOCATION OF THE OTHER END.

5. ALL SURFACES WHERE DEMOLISHED EQUIPMENT OR CONDUIT IS REMOVED SHALL BE CLEANED, PATCHED AND PAINTED TO MATCH THE SURROUNDING SURFACE.

6. THE CONTRACTOR SHALL BE RESPONSIBLE TO CHECK THE FUNCTION OF EACH CONDUCTOR BEFORE REMOVING OR DISCONNECTING.

7. IF A CONDUCTOR WHICH HAS TO STAY IN SERVICE (NOT BEING DEMOLISHED) IS INSTALLED IN A COMMON CONDUIT WITH CONDUCTORS WHICH ARE BEING DEMOLISHED, THE CONTRACTOR SHALL REMOVE ALL CONDUCTORS FROM THE CONDUIT, PROVIDE NEW CONDUCTORS WHICH ARE REPLACEMENTS FOR THE CONDUCTORS THAT ARE TO REMAIN IN SERVICE AND RE-INSTALL THE NEW CONDUCTORS. AFTER THE CONDUCTORS ARE PULLED, MEGGER OR HIPOT TEST EACH CONDUCTOR. CONNECT BOTH ENDS OF THE NEW CONDUCTORS AND TEST THE SYSTEM FOR PROPER FUNCTION. DO NOT RE-PULL USED CONDUCTORS.

8. WHERE EQUIPMENT IS BEING RE-FED FROM A NEW SOURCE, EXISTING CONDUIT MAY BE REUSED ONLY IF THE CONDUIT AND FITTINGS ARE OF THE TYPE SPECIFIED FOR NEW WORK ON THIS CONTRACT. IF NOT, THE CONDUIT AND CONDUCTORS SHALL BE REPLACED WITH NEW MATERIAL MEETING THE SPECIFICATIONS, AT NO ADDITIONAL COST TO THE OWNER.

9. THE CONTRACTOR SHALL COORDINATE WITH THE OWNER/ENGINEER TO FLAG EXISTING UNDERGROUND CONDUITS BEFORE DIGGING.

10. THE OWNER HAS THE RIGHT OF FIRST REFUSAL TO THE EQUIPMENT BEING REMOVED. THE CONTRACTOR SHALL DELIVER THE EQUIPMENT WHICH THE OWNER WISHES TO KEEP AT LOCATION DESIGNATED BY THE OWNER. SEE SECTION 16060.

11. THE CONTRACTOR SHALL NOT MAKE ANY MODIFICATION UNTIL THE FOLLOWING HAS BEEN DONE:

    A. THE OWNER/CONTRACTOR SHALL WITNESS AND RECORD THE CONDITION OF THE EXISTING EQUIPMENT, THE CONTRACTOR SHALL NOTE DOWN ANY DEFECTS OR DEFICIENCIES.

    B. THE OWNER SHALL OPERATE THE EQUIPMENT TO DEMONSTRATE THE CURRENT CONDITIONS. THE CONTRACTOR SHALL NOTE DOWN ANY DEFECTS OR DEFICIENCIES.

    C. A WRITTEN AND PHOTOGRAPHIC RECORD OF THE OPERATION AND EXISTING CONDITION SHALL BE KEPT IN A THREE RING BINDER AT THE OWNER/CONTRACTOR TRAILER, IN FORM OF PICTURES AND INFORMATION ON A FORM.

    D. A FORM SHALL BE GENERATED BY THE CONTRACTOR TO RECORD THE OBSERVATIONS. BOTH PARTIES SHALL SIGN ON THE FORM.

    E. THE CONTRACTOR SHALL BE RESPONSIBLE TO FURNISH AND INSTALL MATERIAL OR EQUIPMENT DAMAGED DURING THE COURSE OF HIS WORK.

    F. AFTER THE CHANGES ARE MADE, THE EQUIPMENT SHALL BE INSPECTED AND RE-TESTED TO DEMONSTRATE THAT IT FUNCTIONS CORRECTLY.

    G. NO PORTION OF EXISTING CONDUCTORS SHALL BE SPLICED TO NEW CONDUCTORS FOR RE-USE WITHOUT SPECIFIC APPROVAL FROM THE OWNER/ENGINEER ON A CASE-BY-CASE BASIS.

12. THE CONTRACTOR SHALL ASSUME OWNERSHIP OF ALL DEMOLISHED MATERIALS DEEMED WORTHLESS BY THE OWNER. THE DEMOLISHED MATERIALS SHALL BE DISPOSED OF OFF SITE BY THE CONTRACTOR TO APPROVED DISPOSAL SITES SECURED BY THE CONTRACTOR. FEES FOR ALL APPLICABLE PERMITS, HAUL ROUTES AND DISPOSAL SITE SHALL BE PAID BY THE CONTRACTOR.

13. THE CONTRACTOR SHALL COMPLY WITH ALL LOCAL, STATE AND FEDERAL LAWS, REGULATIONS, AND ORDINANCES REGARDING SAFETY, HEALTH, AND ENVIRONMENTAL PROTECTION.

MCC, CONTROL PANELS, PANELBOARDS

THESE NOTES APPLY TO CONTROL PANELS, MCC ETC WHICH HAS TO BE REFURBISHED, MODIFIED, DISCONNECTED & RECONNECTED OR REWORKED. SEE SECTION 16060:

THE CONTRACTOR SHALL NOT MAKE ANY MODIFICATION UNTIL THE FOLLOWING HAS BEEN DONE:

A. THE OWNER/CONTRACTOR SHALL WITNESS THE CONDITION OF THE EXISTING EQUIPMENT, THE CONTRACTOR SHALL NOTE DOWN ANY DEFECTS OR DEFICIENCY.

B. THE OWNER SHALL OPERATE THE EQUIPMENT TO DEMONSTRATE THE CURRENT CONDITIONS. THE CONTRACTOR SHALL NOTE DOWN ANY DEFECTS OR DEFICIENCIES.

C. A RECORD OF THE OPERATION AND EXISTING CONDITION SHALL BE KEPT IN A THREE RING BINDER AT THE OWNER/CONTRACTOR TRAILER, IN FORM OF PICTURES AND INFORMATION ON A FORM.

D. A FORM SHALL BE GENERATED BY THE CONTRACTOR TO RECORD THE OBSERVATIONS. BOTH PARTIES SHALL SIGN ON THE FORM.

E. THE CONTRACTOR SHALL BE RESPONSIBLE TO FURNISH AND INSTALL MATERIAL IF DAMAGED BY HIM DURING HIS WORK.

F. AFTER THE CHANGES ARE MADE, THE EQUIPMENT SHALL BE INSPECTED AND RE-TESTED TO DEMONSTRATE THAT IT FUNCTIONS CORRECTLY.

CONDUIT TYPE	LOCATION
1. RIGID GALVANIZED CONDUIT	NOT ACCEPTABLE FOR USE ON THIS PROJECT.
2. PVC COATED RIGID ALUMINUM CONDUIT	ALL EMBEDDED CONDUIT BENDS, UNDERGROUND DUCTBANK OF MORE THAN 20 DEGREES, AND ALL CONDUIT STUB-UPS TO A MINIMUM OF 6" ABOVE FINISHED FLOOR OR GRADE AND IN CHLORINE AND CAUSTIC ROOMS.
3. LIQUID TIGHT FLEXIBLE ALUMINUM CONDUIT	RACEWAY CONNECTION TO VIBRATING EQUIPMENT ONLY, IN ALL AREAS.
4. RIGID NON-METALLIC, SCHEDULE 40 PVC CONDUIT	UNDERGROUND ENCASED IN RED DYE REINFORCED CONCRETE.
5. RIGID NON-METALLIC, SCHEDULE 80 PVC CONDUIT	FOR USE IN CHLORINE AND CAUSTIC ROOMS.
6. FLEXIBLE ALUMINUM CONDUIT	FIXTURE WHIP CONNECTION TO LIGHTING FIXTURES IN NEMA 12 AREAS (MAXIMUM 3-FT). BX OR AC TYPE PREFABRICATED CABLES ARE NOT PERMITTED.
7. ALUMINUM RIGID METAL CONDUIT	ALL ABOVE GRADE AREAS, EXCEPT FOR CONCRETE EMBEDDED AND THOSE AREAS DESCRIBED IN LOCATIONS 2 THROUGH 6 ABOVE.

NO.	DATE	REVISION	APP.

MBROH ENGINEERING 20
11757 KATY FWY,
SUITE 625
HOUSTON, TX 77077
713-468-2545

SURVEYED BY:
FB NO.

THESE DOCUMENTS ARE FOR INTERIM REVIEW AND ARE NOT INTENDED FOR CONSTRUCTION, BIDDING, OR PERMIT PURPOSES.
HANS POURES
TEXAS P.E. NO. 131630
DATE: 11/5/2026

CITY OF HOUSTON
HOUSTON PUBLIC WORKS

WHITE OAKS
WWTP IMPROVEMENTS
ELECTRICAL
GENERAL NOTES

WBS NUMBER	FOR CITY OF HOUSTON USE ONLY
R-000265-0158-3	
DRAWING SCALE	
NONE	
CITY OF HOUSTON PM	
SHAHIDUR RAHMAN, PE	

SYMBOL	DESCRIPTION
A 3 b	LED PENDANT LIGHTING FIXTURE (UNLESS OTHERWISE NOTED) "A" - FIXTURE TYPE "b" - CONTROLLED BY SWITCH "b" "3" - CIRCUIT NUMBER
A 3 b	LED DOWN LIGHTING FIXTURE (UNLESS OTHERWISE NOTED) "A" - FIXTURE TYPE "b" - CONTROLLED BY SWITCH "b" "3" - CIRCUIT NUMBER
A 3 b	LED WALL MOUNTED LIGHTING FIXTURE (UNLESS OTHERWISE NOTED) "A" - FIXTURE TYPE "b" - CONTROLLED BY SWITCH "b" "3" - CIRCUIT NUMBER
A 3 b A C1	LED POLE MOUNTED LIGHTING FIXTURE (UNLESS OTHERWISE NOTED) "A" - FIXTURE TYPE "b" - CONTROLLED BY SWITCH "b" "3" - CIRCUIT NUMBER "C1" - CONTACT WITHIN LIGHTING CONTACTOR
A 3 b A 3 b	LED STRIP LIGHTING FIXTURE (UNLESS OTHERWISE NOTED) "A" - FIXTURE TYPE "b" - CONTROLLED BY SWITCH "b" "3" - CIRCUIT NUMBER
	INDICATES EMERGENCY LIGHTING FIXTURE WITH BATTERY BACK-UP
	INDICATES LIGHT FIXTURES WHICH ARE UNSWITCHED NIGHT/SECURITY LIGHT ALWAYS ON
A	LED EMERGENCY LIGHTING BATTERY UNIT WITH TWO LAMP HEAD "A" - FIXTURE TYPE
A	REMOTE EMERGENCY ADJUSTABLE WALL LIGHTING FIXTURE WITH TWO LAMP HEADS "A" - FIXTURE TYPE
X	CEILING MOUNTED EXIT SIGN "X" - FIXTURE TYPE
X	WALL OUTLET EXIT SIGN. ARROW INDICATES DIRECTION OF EGRESS "X" - FIXTURE TYPE
	CONDUIT, EXPOSED OR SURFACE MOUNTED
— UG —	CONDUIT, UNDER GROUND OR DUCTBANK
	CONDUIT, CONCEALED
	GROUND CONDUCTOR
	CONDUIT, TURNING UP
	CONDUIT, TURNING DOWN
	CONDUIT STUBBED OUT AND CAPPED
2(3"C., 3#3/0 & 1#2 GRD.)	DENOTES A QUANTITY OF TWO (2) 3-INCH CONDUITS EACH CONTAINING THREE NO. 3/0 AWG CONDUCTORS AND ONE NO. 2 AWG GROUND CONDUCTOR.
(2)-2/C#16TSW	DENOTES A QUANTITY OF TWO INSTRUMENT CABLES. EACH CONSISTS OF TWO NO. 16 AWG CONDUCTORS TWISTED TOGETHER AND COVERED WITH A METALLIC SHIELD AND AN OVERALL PROTECTIVE JACKET. REFER TO THE SPECIFICATIONS FOR THE EXACT CABLE TO BE PROVIDED.
(3)-4"C	THREE 4-INCH CONDUITS
	FLEXIBLE METAL CONDUIT "WHIP" (2#12, 1#12G, 3/4" C. UNLESS OTHERWISE NOTED) FOR RECESSED LIGHTING FIXTURES AND LIQUID TIGHT MOTOR CONNECTIONS
LP1-1,3	HOMERUN, CIRCUITS 1 AND 3 RUN TO PANEL LP-1
$b	SINGLE POLE SWITCH "b" - INDICATES SWITCH LEG, SHALL CONTROL LIGHT FIXTURES WITH "b" DESIGNATION
$ 3 a	MULTI-WAY SWITCH "3" - 3-WAY "4" - 4-WAY "a" INDICATES SWITCH SHALL CONTROL LIGHT FIXTURES WITH "a" DESIGNATION
$M	MANUAL MOTOR STARTER /DISCONNECT
$P	SINGLE POLE SWITCH WITH INTEGRAL PILOT LIGHT

SYMBOL	DESCRIPTION
$D	DIMMER LIGHTING CONTROL SWITCH
$OS	OCCUPANCY LIGHTING CONTROL SWITCH
$TM	TIMER CONTROL SWITCH
C X	LIGHTING CONTACTOR WITH NUMBER OF POLES AS INDICATED
TYPE A	INDICATES ALL LIGHTING FIXTURES WITHIN THE ROOM OR AREA IN WHICH THIS NOTATION APPEARS SHALL BE TYPE "A" UNLESS OTHERWISE NOTED. SEE LIGHTING FIXTURE SCHEDULE FOR TYPES.
L _ L _	LIGHTING PANELBOARD (TYPICAL 1-PHASE - UNLESS OTHERWISE NOTED)
H _ OR H _	DISTRIBUTION PANELBOARD (TYPICAL 3-PHASE - UNLESS OTHERWISE NOTED)
4	DUPLEX RECEPTACLE, 20A, 120V, 1P, 3W C - MOUNTED ABOVE COUNTERTOP GF - GROUND FAULT INTERRUPTER TYPE WP - WEATHERPROOF T - TRANSIENT VOLTAGE SURGE SUPPRESSER 4 - CIRCUIT NUMBER
	RED FACE ISOLATED GROUND DUPLEX, 15A
	30A, 208V, 3PH, 4W, RECEPTACLE
	20A, 240V, 2P, 3W, RECEPTACLE
	CLASS 1, DIV 1, RATED TWIST LOCK RECEPTACLE, VOLTAGE AND AMPERAGE RATING AS NOTED
	SINGLE FACE, SINGLE GANG PEDESTAL WITH 20A, 120V, 1P, 3W DUPLEX RECEPTACLE, FURNISHED AND INSTALLED UNDER DIVISION 16 UNLESS OTHERWISE NOTED. * DENOTES FURNISHED UNDER OTHER DIVISIONS OF THE SPECIFICATIONS BUT INSTALLED UNDER DIVISION 16
D	DOUBLE FACE, SINGLE GANG PEDESTAL WITH 20A, 120V, 1P, 3W DUPLEX RECEPTACLE AND 20A, 240V, 2P, 3W SINGLE RECEPTACLE, FURNISHED AND INSTALLED UNDER DIVISION 16 UNLESS OTHERWISE NOTED. * DENOTES FURNISHED UNDER OTHER DIVISION OF THE SPECIFICATIONS BUT INSTALLED UNDER DIVISION 16
	DOUBLE RECEPTACLE, 20A, 120V, 1P, 3W MOUNTED IN BOX CURB FURNISHED UNDER OTHER DIVISIONS OF THE SPECIFICATIONS BUT INSTALLED UNDER DIVISION 16.
	480, 3P, 4W RECEPTACLE
	QUAD RECEPTACLE
J J	JUNCTION BOX
	PULL BOX
TC	TERMINAL CABINET
M	MOTOR
OS	OCCUPANCY SENSOR
PC	PHOTOCELL
ESA OR ■	EMERGENCY SHOWER ALARM
	SINGLE FACE CLOCK AND CLOCK HANGER OUTLET
DAMP	INDICATES THAT ALL ELECTRICAL EQUIPMENT AND MATERIALS INSTALLED WITHIN THE ROOM OR AREA IN WHICH THIS NOTATION APPEARS SHALL BE OF NEMA 12 CONSTRUCTION UNLESS OTHERWISE NOTED

SYMBOL	DESCRIPTION
CORROSIVE	INDICATES THAT ALL ELECTRICAL EQUIPMENT AND MATERIALS INSTALLED WITHIN THE ROOM OR AREA IN WHICH THIS NOTATION APPEARS SHALL BE OF NEMA 4X CONSTRUCTION UNLESS OTHERWISE NOTED
CLASS 1, DV. 1, GROUP D	INDICATES THAT ALL ELECTRICAL EQUIPMENT AND MATERIALS INSTALLED WITHIN THE ROOM OR AREA IN WHICH THIS NOTATION APPEARS SHALL CONFORM TO N.E.C REQUIREMENTS FOR THE HAZARDOUS AREA CLASSIFICATION SHOWN
COMMUNICATIONS SYSTEMS	
	TELEPHONE OUTLET
	DATA OUTLET
	VOICE/DATA OUTLET
S H1,H2 W	PAGING SPEAKERS, WALL MOUNTED "H1, H2" DENOTES HORN TYPE "W" DENOTES WIDE ANGLE TYPE
S H	PAGING SPEAKER, WALL MOUNTED, BI-DIRECTONAL H = HORN TYPE
S	PAGING SPEAKER, FLUSH MOUNTED CEILING TYPE
S	PAGING SPEAKER, SURFACE MOUNTED CEILING TYPE
VC	REMOTE WALL MOUNTED VOLUME CONTROL FOR CEILING SPEAKER (MOUNT UP 5'-O")
A	PAGING SPEAKER AMPLIFIER ASSEMBLY
TM	TELEPHONE CABINET OR BACKBOARD AS NOTED
P	DATA INPUT/OUTPUT CABLE OUTLET. "P" DENOTES PROCESS COMPUTER SYSTEM
SECURITY SYSTEMS	
SA	SECURITY ALARM PANEL
DS	SECURITY ALARM DOOR SWITCH
K	SECURITY ALARM KEY PAD
R CR	SECURITY SYSTEM CARD ACCESS READER
WS	SECURITY ALARM WINDOW SWITCH
MD	SECURITY ALARM MOTION DETECTOR
CCTV	CLOSED CIRCUIT TV CAMERA
PTZ	PAN, TILT, ZOOM CAMERA LENS CONTROLS
GB	GLASS BREAK DETECTOR
FACP	FIRE ALARM CONTROL PANEL
F	FIRE ALARM HORN (WALL MOUNT)
F	FIRE ALARM HORN AND STROBE (WALL MOUNT)
SD	FIRE ALARM SMOKE DETECTOR (CEILING MOUNT)
	FIRE ALARM STROBE. ""cd" WHERE "" REPRESENTS CANDELA RATING (CEILING MOUNT)
	MEDIUM VOLTAGE VACUUM CONTACTOR
WET	INDICATES THAT ALL ELECTRICAL EQUIPMENT AND MATERIALS INSTALLED WITHIN THE ROOM OR AREA IN WHICH THIS NOTATION APPEARS SHALL BE OF NEMA 4 CONSTRUCTION UNLESS OTHERWISE NOTED

ABBREVIATIONS

AC	ALTERNATING CURRENT
ASD	ADJUSTABLE SPEED DRIVE
AFF	ABOVE FINISHED FLOOR
AG	ABOVE GRADE
ALUM	ALUMINUM
AMP/A	AMPERE
ATC	AIR TERMINAL CHAMBER
ATS	AUTOMATIC TRANSFER SWITCH
AUTO	AUTOMATIC
AUX	AUXILIARY
AWG	AMERICAN WIRE GAUGE
BAS	BUILDING AUTOMATION SYSTEM
C	CONDUIT
CB	CIRCUIT BREAKER
CKT	CIRCUIT
CLF	CURRENT LIMITING FUSE
CP	CONTROL PANEL
CPT	CONTROL POWER TRANSFORMER
CR	CONTROL RELAY
CS	CONTROL SWITCH
CT	CURRENT TRANSFORMER
CU	COPPER
DC	DIRECT CURRENT
DCT	DIFFERENTIAL CURRENT TRANSFORMER
DI	DOOR INTERLOCK
DN	DOWN
DWG	DRAWING
EC	EMPTY CONDUIT
EHH	ELECTRICAL HANDHOLE
ELEC	ELECTRICAL
ELEV	ELEVATION
EM	EMERGENCY
EMH	ELECTRICAL MANHOLE
EO	ELECTRICALLY OPERATED
FBO	FURNISHED BY OTHERS
FO	FIBER OPTIC
FOPP	FIBER OPTIC PATCH PANEL
FRP	FIBERGLASS REINFORCED POLYESTER
FU	FUSE
FVNR	FULL VOLTAGE NON-REVERSING
G, GRD	GROUND
GCP	GENERATOR CONTROL PANEL
GEN	GENERATOR
GFI	GROUND FAULT INTERRUPTER
GO	GATE OPERATOR
GOS	GANG OPERATED SWITCH
GRS	GALVANIZED RIGID STEEL
HH	HANDHOLE
HMI	HUMAN MACHINE INTERFACE
HT	HEIGHT
HTC	HEAT TRACE CONTROLLER
HTP	HEAT TRACE PANEL
HZ	HERTZ
IMH	INSTRUMENT MANHOLE
INST	INSTRUMENT
LA	LIGHTNING ARRESTER
LC	LIGHTING CONTRACTOR
LGTS	LIGHTS
LP	LIGHTING PANEL
LPU	LOCAL PROCESSING UNIT
LV	LOW VOLTAGE
MCC	MOTOR CONTROL CENTER
MCP	MOTOR CIRCUIT PROTECTOR
MFR	MANUFACTURER
MH	MANHOLE
MLO	MAIN LUGS ONLY
MPR	MOTOR PROTECTION RELAY
MTG	MOUNTING
MTD	MOUNTED
MTS	MANUAL TRANSFER SWITCH
MVSS	MEDIUM VOLTAGE SOLID STATE
MV	MEDIUM VOLTAGE
MVSS	MEDIUM VOLTAGE SOLID STATE
NC	NORMALLY CLOSED
NGR	NEUTRAL GROUNDING RESISTOR
NO	NORMALLY OPEN OR NUMBER
NTS	NOT TO SCALE
OH	OVERHEAD
OL	OVERLOAD
OLX	OVERLOAD CONTROL RELAY
PB	PUSH BUTTON
PCC	PUMP CONTROL CONSOLE
PFCC	POWER FACTOR CORRECTION CAPACITOR
PFR	PHASE FAILURE RELAY
PH	PHASE
PLC	PROGRAMMABLE LOGIC CONTROLLER
PMCP	PUMP MOTOR CONTROL PANEL
PPR	PHASE PROTECTIVE RELAY
PR	PAIR
PT	POTENTIAL TRANSFORMER
PTT	PUSH TO TEST
PVC	POLYVINYL CHLORIDE
QTY	QUANTITY
RCP	RELAY CONTROL PANEL
RECP	RECEPTACLE
RRTD	REMOTE RTD MODULE
RTD	RESISTANCE TEMPERATURE DETECTOR
SB	SWITCHBOARD
SC	SURGE CAPACITOR
SCH	SCHEMATIC
SCTB	SHORT CIRCUITING TERMINAL BLOCK
SEC	SECONDS OR SECONDARY
SH	SHIELDED
SHR	SPACE HEATER
SHT	SHEET
SN	SOLID NEUTRAL
SPD	SURGE PROTECTIVE DEVICE
SPM	STARTING PROTECTION MODULE
SS	STAINLESS STEEL
ST	STARTER
SV	SOLENOID VALVE
SW	SWITCH
SWGR	SWITCHGEAR
TC	TERMINATION CABINET
TEL	TELEPHONE
TS	TEMPERATURE SWITCH
TSW	TWISTED SHIELDED WIRE
TW	TWISTED
TYP	TYPICAL
UG	UNDERGROUND
V	VOLTS
VM	VIBRATION MONITOR
VO	VALVE OPERATOR
W	WIRE
WP	WEATHERPROOF
WPIU	WEATHERPROOF WHILE IN USE
XFMR	TRANSFORMER
XP	EXPLOSION PROOF

APP.	DATE	REVISION

MBROH ENGINEERING 20
11757 KATY FWY,
SUITE 625
HOUSTON, TX 77077
713-468-2545

SURVEYED BY:

FB NO.

THESE DOCUMENTS ARE FOR INTERIM REVIEW AND ARE NOT INTENDED FOR CONSTRUCTION, BIDDING, OR PERMIT PURPOSES.

HANS POURES

TEXAS P.E. NO. 131630

DATE: 11/4/2026

CITY OF HOUSTON
HOUSTON PUBLIC WORKS

WHITE OAKS WWTP IMPROVEMENTS

ELECTRICAL

LEGENDS SYMBOLS & ABBREVIATIONS - I

WBS NUMBER	FOR CITY OF HOUSTON USE ONLY
R-000265-0158-3	
DRAWING SCALE	
NONE	
CITY OF HOUSTON PM	
SHAHIDUR RAHMAN, PE	
SHEET NO. 127 OF 189	

E-02

PLOTTED: 05/11/2026
PLOT STYLE: ----
FILE PATH: P:\Projects\0106 - City Of Houston\20031 - White Oak Wwtp Phase ii\4.0 Cad\4.2 Electrical\E-02 LEGENDS, SYMBOLS & ABBREVIATIONS - I.dwg

ONE-LINE OR CONTROL DIAGRAM	PLAN	DESCRIPTION
52 CS	——	MEDIUM VOLTAGE DRAW OUT TYPE POWER CIRCUIT BREAKER CS-CONTROL SWITCH
(E.O.) FRAME TRIP	CB	LOW VOLTAGE CIRCUIT BREAKER, 3 POLE UNLESS OTHERWISE NOTED.
		COMBINATION MOTOR CIRCUIT PROTECTOR AND MAGNETIC MOTOR STARTER, FULL VOLTAGE NON-REVERSING UNLESS OTHERWISE NOTED: ✳ FVR- FULL VOLTAGE REVERSING FVNR- FULL VOLTAGE NON-REVERSING 2S1W- TWO SPEED, ONE WINDING 2S2W- TWO SPEED, TWO WINDING
✳		NON-FUSIBLE DISCONNECT SWITCH, 600 VOLT, 3 POLE ✳ AMPERE RATING NOTED IF OTHER THAN 30A
✳ FUSE ✱	F	FUSIBLE DISCONNECT SWITCH, 600 VOLT, 3 POLE, AMPERE RATING AND FUSE SIZE AS NOTED ✳ AMPERE RATING NOTED IF OTHER THAN ✱ 30A FUSE RATING
MIS	I	MOTOR ISOLATION SWITCH, 30A UNLESS OTHERWISE NOTED
	——	DRAWOUT TYPE EQUIPMENT OR DEVICE AMMETER (WITH SWITCH IF 3-PHASE)
	——	MEDIUM VOLTAGE CABLE TERMINATION
	——	MEDIUM VOLTAGE AIR INTERRUPTER SWITCH
FUSE	——	MEDIUM VOLTAGE FUSED AIR INTERRUPTER SWITCH
FUSE	——	MEDIUM VOLTAGE FUSED MOTOR CONTROLLER
480V 120/208Y 30 KVA K-	T	TRANSFORMER, RATINGS AND CONNECTIONS AS NOTED. UNLESS OTHERWISE NOTED ON THE SINGLE LINE DIAGRAMS ALL DRY TYPE TRANSFORMERS SERVICING ADMINISTRATIVE AND LABORATORY SPACES SHALL HAVE A K FACTOR OF 13. ALL OTHER DRY TYPE TRANSFORMERS SHALL HAVE A K-4 RATING. ISOLATION TRANSFORMERS SHALL HAVE A K-20 RATING.
△	——	"DELTA" TRANSFORMER CONNECTION
	——	"WYE" SOLID GROUNDED TRANSFORMER CONNECTION
✳ A:5	——	CURRENT TRANSFORMER ✳ QUANTITY A= PRIMARY AMPERES
50:5	——	ZERO SEQUENCE GROUND FAULT CURRENT TRANSFORMER
✳ PV-SV	——	POTENTIAL TRANSFORMER ✳ QUANTITY PV=PRIMARY VOLTAGE SV=SECONDARY VOLTAGE
	G	GENERATOR, RATINGS AND CONNECTIONS AS NOTED
100A ATS-1 N S	——	TRANSFER SWITCH AUTOMATIC TRANSFER SWITCH (EG ATS-1) MANUAL TRANSFER SWITCH (EG MTS-1) "S" = INDICATES STANDBY SOURCE 100A INDICATES CONTINUOUS CURRENT RATING "N" = INDICATES NORMAL SOURCE
✳	✳	VARIABLE SPEED DRIVE CONTROLLER ✳ D.C. = D.C DRIVE CONTROLLER SCR = SILICON CONTROLLED RECTIFIER VFD = VARIABLE FREQUENCY DRIVE AFD = ADJUSTABLE FREQUENCY DRIVE
5KW	E	UNIT HEATER - ELECTRIC HEATING COIL AND FAN
——	U	UNIT HEATER - STEAM OR WATER HEATING COIL AND FAN
5	M	MOTOR, NUMBER INDICATES HORSEPOWER
VM ✳	——	VOLTMETER (WITH SWITCH IF 3-PHASE)
AM ✳	——	AMPMETER (WITH SWITCH IF 3-PHASE)

ONE-LINE OR CONTROL DIAGRAM	PLAN	DESCRIPTION
✳	——	METER ✳WM - WATTMETER WHM - WATTHOUR METER WHDM - WATTHOUR DEMAND METER WHDR - WATTHOUR DEMAND RECORDER PF - POWER FACTOR METER RT - RUNNING TIME METER TRANSDUCER AX - CURRENT TRANSDUCER RETURN WX - WATT TRANSDUCER
#	#	RELAY, NO. AS INDICATED 25 - SYNCHRONISM CHECK RELAY 27 - UNDER VOLTAGE RELAY 38 - BEARING PROTECTIVE DEVICE 40 - LOSS OF EXCITATION RELAY 42 - RUNNING CONTACTOR/PILOT RELAY 46 - REVERSE PHASE/PHASE BALANCE/CURRENT RELAY 47 - PHASE SEQUENCE VOLTAGE RELAY 49 - MACHINE OR TRANSFORMER THERMAL RELAY 50 - INSTANTANEOUS OVERCURRENT RELAY 50G - INSTANTANEOUS GROUND 51 - TIME OVERCURRENT RELAY 54G - TIME OVERCURRENT RELAY, GROUNDING RESISTOR TYPE 51N - TIME OVERCURRENT RELAY, RESIDUAL TYPE 51V - TIME OVERCURRENT RELAY WITH VOLTAGE RESTRAINT 60 - NEGATIVE SEQUENCE VOLTAGE RELAY 62 - TIME DELAY RELAY 63 - OVER PRESSURE RELAY 67 - AC DIRECTIONAL OVERCURRENT RELAY 83 - AUTOMATIC SELECTIVE CONTROL OR TRANSFER RELAY 86 - LOCKING-OUT RELAY 87 - DIFFERENTIAL PROTECTIVE RELAY B - SUFFIX INDICATES "BUS" G - SUFFIX INDICATES "GENERATOR" GF - GROUND FAULT ST - SHUNT TRIP T - SUFFIX INDICATES "TRANSFORMER" X - SUFFIX INDICATES "AUXILIARY"
✳	——	SPECIAL CAPACITOR ✳ SC - SURGE CAPACITOR PF - POWER FACTOR CORRECTION CAPACITOR
	——	PUSH BUTTON, MOMENTARY CONTACT, SPRING RETURN, NORMALLY CLOSED
	——	PUSH BUTTON, MOMENTARY CONTACT, SPRING RETURN, NORMALLY OPEN
	ES	EMERGENCY STOP PUSH BUTTON WITH RED MUSHROOM HEAD OPERATOR (MAINTAINED CONTACT)
START STOP	PB	START-STOP PUSH BUTTON CONTROL STATION (MOMENTARY CONTACT)
STOP START	PBM	START-STOP PUSH BUTTON CONTROL STATION MAINTAINED CONTACT WITH LOCKOUT DEVICE ON STOP
OFF ON	S/S	OFF/ON SELECTOR SWITCH
B A C ✳ (XOO) (OOX)	✳	3 POSITION SELECTOR SWITCH, MAINTAINED CONTACT O-OPEN X-CLOSED ✳ NAMEPLATE (A/B/C) HOA - HAND/OFF/AUTO HOR - HAND/OFF/REMOTE LOR - LOCAL/OFF/REMOTE RSL - RAISE/STOP/LOWER TOA - TEST/OFF/AUTO NOTE: 2 POSITION MULTI-CONTACT SWITCH FOLLOWS SAME CONVENTION

POSITION	TOP CONTACT	MIDDLE CONTACT	BOTTOM CONTACT
A	X	O	O
B	O	O	O
C	O	O	X

ONE-LINE OR CONTROL DIAGRAM	PLAN	DESCRIPTION
LC	——	LIGHTING CONTACTOR COIL
M	——	MOTOR STARTER COIL
CR #	——	CONTROL RELAY COIL, NUMBER AS INDICATED
✳	——	PILOT LIGHT, COLOR AS INDICATED ✳ R - RED G - GREEN B - BLUE W - WHITE A - AMBER
PTT	——	PILOT LIGHT, PUSH-TO-TEST TYPE, COLOR AS NOTED ABOVE
✳ R: S:	——	TIME DELAY RELAY R= RANGE AS NOTED S= SET POINT AS NOTED ✳TDD-TIME DELAY AFTER DE-ENERGIZATION-OFF DELAY TDE- TIME DELAY AFTER ENERGIZATION-ON DELAY NOTC-NORMALLY OPEN, TIMED TO CLOSE WHEN ENERGIZED NCTO-NORMALLY CLOSED, TIMED TO OPEN WHEN ENERGIZED NOTO-NORMALLY OPEN, TIMED TO OPEN WHEN DE-ENERGIZED NCTC-NORMALLY CLOSED, TIMED TO CLOSE WHEN DE-ENERGIZED

ONE-LINE OR CONTROL DIAGRAM	PLAN	DESCRIPTION
——	✳ I -## ✳ ✱	FIELD INSTRUMENT, TAG NO. OR LOOP # AS INDICATED - INDICATES INSTRUMENT TYPE DEFINED ON LOOP SHEETS ## - INDICATES LOOP NO.
	LS OR	LIQUID LEVEL (FLOAT) SWITCH NORMALLY OPEN, CLOSES ON RISING LEVEL NORMALLY CLOSED, OPENS ON RISING LEVEL
	PS OR	PRESSURE OR VACUUM SWITCH NORMALLY OPEN, CLOSES ON RISING PRESSURE NORMALLY OPEN, CLOSES ON DROPPING PRESSURE NORMALLY CLOSED, OPEN ON RISING PRESSURE NORMALLY CLOSED, OPENS ON DROPPING PRESSURE
	TS OR T OR	TEMPERATURE SWITCH OR THERMOSTAT NORMALLY OPEN, CLOSES ON RISING TEMPERATURE NORMALLY OPEN, CLOSES ON DROPPING TEMPERATURE NORMALLY CLOSED, OPENS ON RISING TEMPERATURE NORMALLY CLOSED, OPENS ON DROPPING TEMPERATURE
	FS OR	FLOW SWITCH (AIR, WATER, ETC) NORMALLY OPEN, CLOSES ON INCREASED FLOW NORMALLY CLOSED, OPENS ON INCREASED FLOW
	ZS OR	POSITION (LIMIT) SWITCH NORMALLY OPEN NORMALLY OPEN - HELD CLOSED NORMALLY CLOSED NORMALLY CLOSED - HELD OPEN
	TQ OR	TORQUE SWITCH NORMALLY CLOSED, OPENS ON HIGH TORQUE
	——	CONDUCTORS OR CONDUITS CROSSING PATHS BUT NOT CONNECTED
	——	CONDUCTORS ELECTRICALLY CONNECTED
	——	INDICATES LIMITS OF EQUIPMENT OR WIRING ENCLOSURE
SA	——	SURGE ARRESTER
		GROUND ROD GROUND ROD WELL
30A 3SFU	——	FUSE, AMPERE RATING AS NOTED
	HTR	HEATER
	——	INDUCTOR
	TG	TACHOMETER GENERATOR
	——	CONTACT, NORMALLY OPEN (NO)
	——	CONTACT, NORMALLY CLOSED (NC)
	——	OVERLOAD RELAY HEATER
K	——	KEY INTERLOCK
TB	——	TERMINAL OR TEST BLOCK
RTD	——	RESISTANCE TEMPERATURE DETECTOR
VE	——	VIBRATION SENSOR

ONE-LINE OR CONTROL DIAGRAM	PLAN	DESCRIPTION
DM	——	DAMPER MOTOR
ETM OR	——	ELAPSED TIME METER
MOV	MOV	MOTOR OPERATED VALVE
	——	PUSH BUTTON STATION, REFER TO ELECTRICAL SCHEMATIC FOR NUMBER OF DEVICES.
JP	——	POWER JUNCTION BOX
JI	——	4-20mA SIGNAL JUNCTION BOX
JC	——	CONTROL JUNCTION BOX
	——	REMOTE DEVICE
	——	BORING LOCATION
	——	TERMINAL
SV		SOLENOID VALVE

APP. | REVISION | NO. | DATE

MBROH ENGINEERING 20
11757 KATY FWY,
SUITE 625
HOUSTON, TX 77077
713-468-2545

THESE DOCUMENTS ARE FOR INTERIM REVIEW AND ARE NOT INTENDED FOR CONSTRUCTION, BIDDING, OR PERMIT PURPOSES.
HANS POURES
TEXAS P.E. NO. 131630
DATE: 11/4/2026

SURVEYED BY:
FB NO.

CITY OF HOUSTON
HOUSTON PUBLIC WORKS

WHITE OAKS WWTP IMPROVEMENTS

ELECTRICAL
LEGENDS SYMBOLS & ABBREVIATIONS - II

WBS NUMBER	FOR CITY OF HOUSTON USE ONLY
R-000265-0158-3	
DRAWING SCALE	
NONE	
CITY OF HOUSTON PM	
SHAHIDUR RAHMAN, PE	
SHEET NO. 128 OF 189	

E-03

PLOTTED: 05/11/2026
PLOT STYLE: ----
FILE PATH: P:\Projects\0106 - City Of Houston\20031 - White Oak Wwtp Phase ii\4.0 Cad\4.2 Electrical\E-03 LEGENDS, SYMBOLS & ABBREVIATIONS - II.dwg

PLOTTED: 05/11/2026
PLOT STYLE: ----
FILE PATH: P:\Projects\0106 - City Of Houston\20031 - White Oak Wwtp Phase ii\4.0 Cad\4.2 Electrical\E-04 OVERALL DEMOLITION ELECTRICAL SITE PLAN.dwg

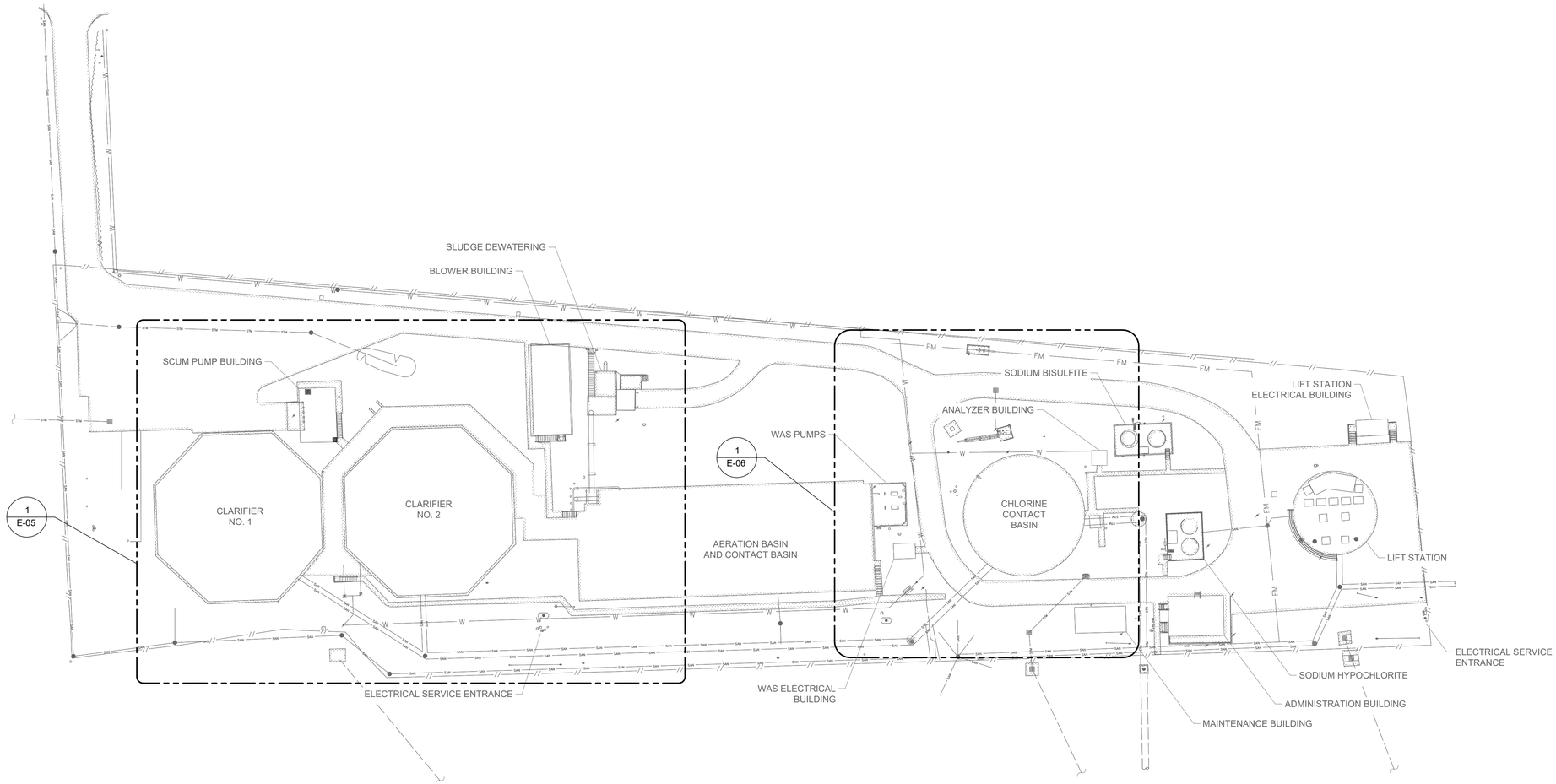

OVERALL DEMOLITION
ELECTRICAL SITE PLAN

SCALE: 1" = 40' (1)

0 20' 40' 80' 120'

N

NO.	DATE	REVISION	APP.

NOTES BY SYMBOL "(#)":

1. ELECTRICAL CONTRACTOR SHALL VERIFY SCOPE PRIOR TO STARTING WORK.

LEGEND:

- AREA SCOPE BOUNDARY
- DEMOLITION SCOPE

MBROH 20 ENGINEERING
11757 KATY FWY,
SUITE 625
HOUSTON, TX 77077
713-468-2545

SURVEYED BY:
FB NO.

THESE DOCUMENTS ARE FOR INTERIM REVIEW AND ARE NOT INTENDED FOR CONSTRUCTION, BIDDING, OR PERMIT PURPOSES.
HANS POURES
TEXAS P.E. NO. 131630
DATE: 11/5/2026

CITY OF HOUSTON
HOUSTON PUBLIC WORKS

WHITE OAKS WWTP IMPROVEMENTS

ELECTRICAL
OVERALL DEMOLITION
ELECTRICAL SITE PLAN

WBS NUMBER	FOR CITY OF HOUSTON USE ONLY
R-000265-0158-3	
DRAWING SCALE	
1" = 40'	
CITY OF HOUSTON PM	
SHAHIDUR RAHMAN, PE	
SHEET NO. 129 OF 189	

E-04

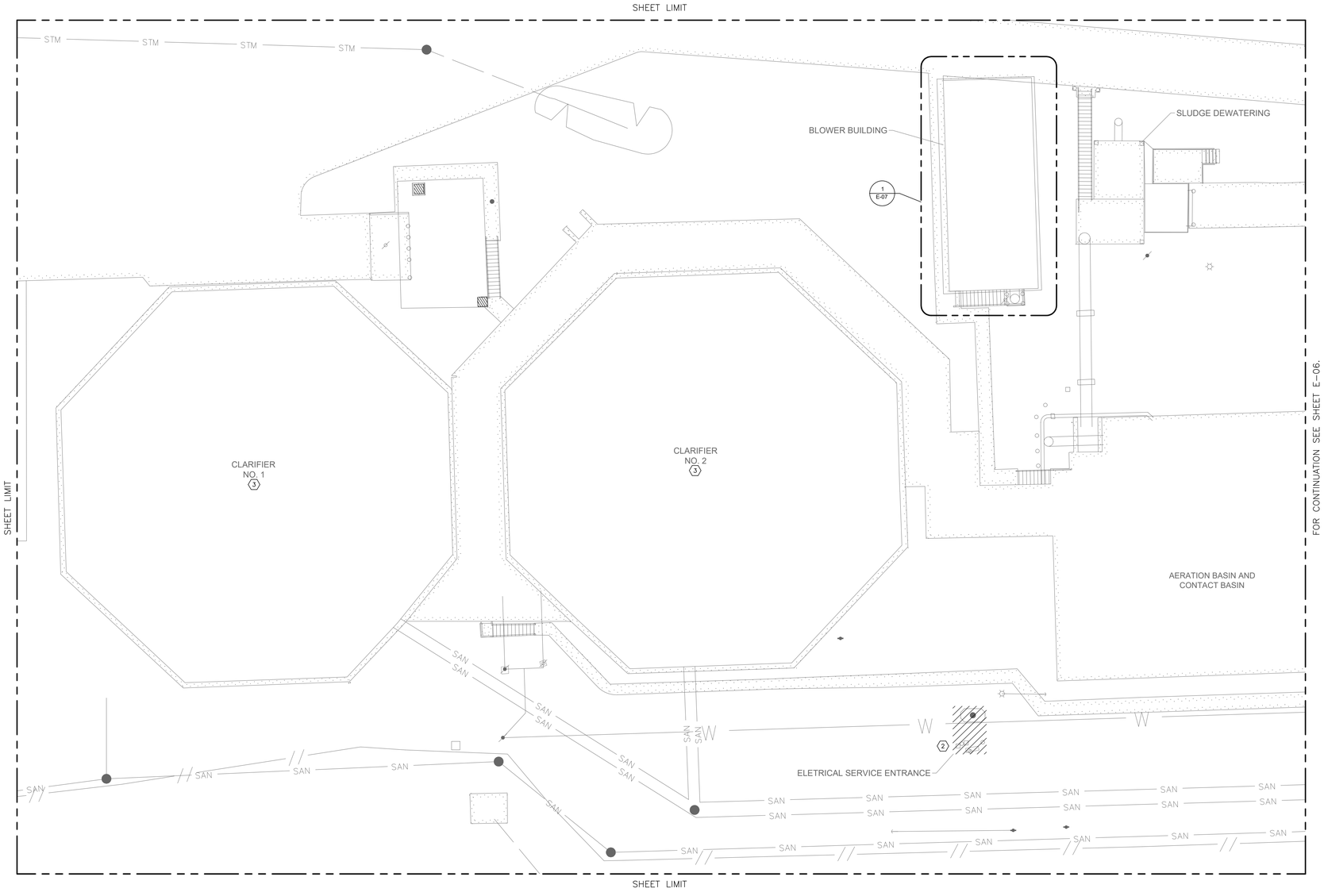

DEMOLITION -
PARTIAL SITE PLAN I

1

SCALE: 1/16" = 1'-0"

0 8' 16' 32' 48'

N

NOTES BY SYMBOL "#":

1. ELECTRICAL CONTRACTOR SHALL VERIFY SCOPE PRIOR TO STARTING WORK.
2. SEE ONE-LINE DIAGRAMS FOR EQUIPMENT DEMOLITION.
3. ELECTRICAL CONTRACTOR SHALL DISCONNECT EXISTING MOTOR, SO MOTOR CAN BE REPLACED. CIRCUIT SHALL BE REUSED FOR NEW MOTOR.

LEGEND:

AREA SCOPE BOUNDARY

DEMOLITION SCOPE

NO.	DATE	REVISION	APP.

MBROH ENGINEERING 20
11757 KATY FWY,
SUITE 625
HOUSTON, TX 77077
713-468-2545

SURVEYED BY:

FB NO.

THESE DOCUMENTS ARE FOR INTERIM REVIEW AND ARE NOT INTENDED FOR CONSTRUCTION, BIDDING, OR PERMIT PURPOSES.

HANS POURES

TEXAS P.E. NO. 131630

DATE: 11/4/2026

CITY OF HOUSTON
HOUSTON PUBLIC WORKS

WHITE OAKS WWTP IMPROVEMENTS

ELECTRICAL

DEMOLITION -
PARTIAL SITE PLAN I

WBS NUMBER	FOR CITY OF HOUSTON USE ONLY
R-000265-0158-3	
DRAWING SCALE	
1/16" = 1'-0"	
CITY OF HOUSTON PM	
SHAHIDUR RAHMAN, PE	
SHEET NO. 130 OF 189	

E-05

PLOTTED: 05/11/2026
PLOT STYLE: ----
FILE PATH: P:\Projects\0106 - City Of Houston\20031 - White Oak Wwtp Phase II\4.0 Cad\4.2 Electrical\E-05 DEMOLITION - PARTIAL SITE PLAN I.dwg

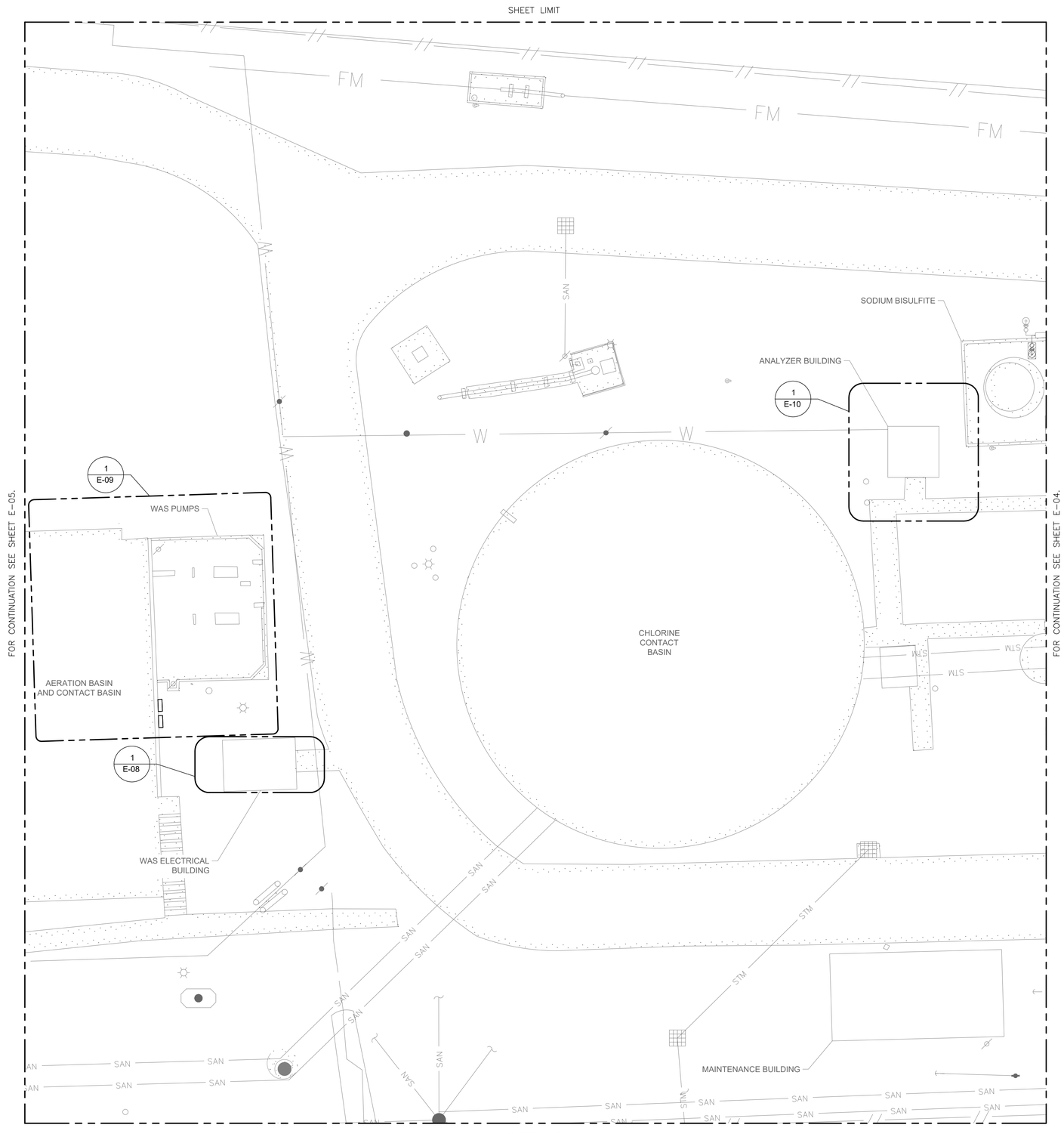

NOTES BY SYMBOL "⬡ # ":

1. ELECTRICAL CONTRACTOR SHALL VERIFY SCOPE PRIOR TO STARTING WORK.
2. SEE ONE-LINE DIAGRAMS FOR EQUIPMENT DEMOLITION.

LEGEND:

AREA SCOPE BOUNDARY

DEMOLITION SCOPE

DEMOLITION -
PARTIAL SITE PLAN II

SCALE: 3/32" = 1'-0" (1)

0 4' 8' 20' 32'

NO.	DATE	REVISION	APP.

MBROH ENGINEERING 20
11757 KATY FWY,
SUITE 625
HOUSTON, TX 77077
713-468-2545

SURVEYED BY:
FB NO.

THESE DOCUMENTS ARE FOR INTERIM REVIEW AND ARE NOT INTENDED FOR CONSTRUCTION, BIDDING, OR PERMIT PURPOSES.
HANS POURES
TEXAS P.E. NO. 131630
DATE: 11/5/2026

CITY OF HOUSTON
HOUSTON PUBLIC WORKS

WHITE OAKS WWTP IMPROVEMENTS

ELECTRICAL
DEMOLITION -
PARTIAL SITE PLAN II

WBS NUMBER	FOR CITY OF HOUSTON USE ONLY
R-000265-0158-3	
DRAWING SCALE	
3/32" = 1'-0"	
CITY OF HOUSTON PM	
SHAHIDUR RAHMAN, PE	
SHEET NO. 131 OF 189	

E-06

PLOTTED: 05/11/2026
PLOT STYLE: ----
FILE PATH: P:\Projects\0106 - City Of Houston\20031 - White Oak Wwtp Phase ii\4.0 Cad\4.2 Electrical\E-06 DEMOLITION - PARTIAL SITE PLAN II.dwg

FILE PATH: P:\Projects\0106 - City Of Houston\20031 - White Oak Wwtp Phase ii\4.0 Cad\4.2 Electrical\E-07 DEMOLITION - BLOWER BUILDING ELECTRICAL PLAN.dwg
PLOT STYLE: ----
PLOTTED: 05/11/2026

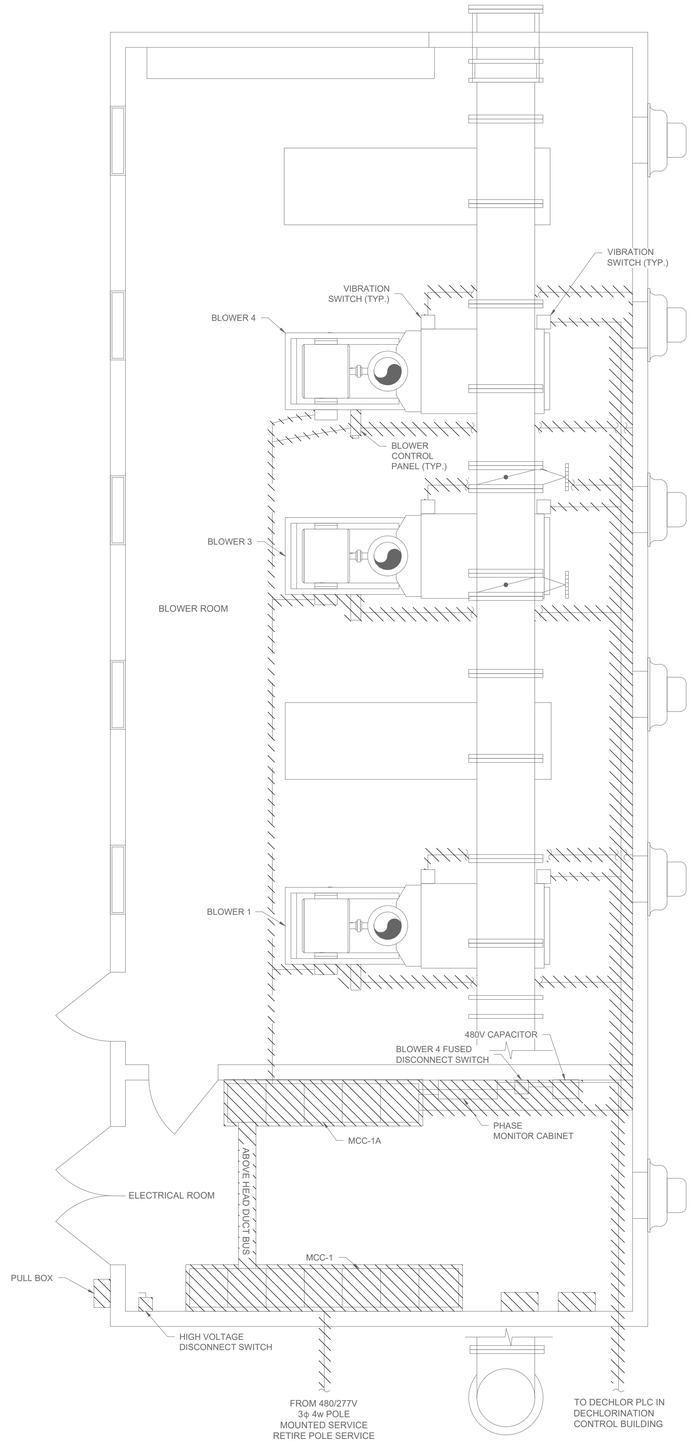

DEMOLITION - BLOWER BUILDING ELECTRICAL PLAN

SCALE: 1/4" = 1'-0"

0 2' 4' 8' 12'

NOTES BY SYMBOL "⟨#⟩":

1. ELECTRICAL CONTRACTOR SHALL VERIFY SCOPE PRIOR TO STARTING WORK.
2. SEE ONE-LINE DIAGRAMS FOR EQUIPMENT DEMOLITION.

LEGEND:

DEMOLITION SCOPE

NO.	DATE	REVISION	APP.

MBROH ENGINEERING
11757 KATY FWY,
SUITE 625
HOUSTON, TX 77077
713-468-2545

THESE DOCUMENTS ARE FOR INTERIM REVIEW AND ARE NOT INTENDED FOR CONSTRUCTION, BIDDING, OR PERMIT PURPOSES.

HANS POURES
TEXAS P.E. NO. 131630
DATE: 11/5/2026

SURVEYED BY:
FB NO.

CITY OF HOUSTON
HOUSTON PUBLIC WORKS

WHITE OAKS WWTP IMPROVEMENTS

ELECTRICAL

DEMOLITION - BLOWER BUILDING ELECTRICAL PLAN

WBS NUMBER	FOR CITY OF HOUSTON USE ONLY
R-000265-0158-3	
DRAWING SCALE	
1/4" = 1'-0"	
CITY OF HOUSTON PM	
SHAHIDUR RAHMAN, PE	

FILE PATH: P:\Projects\0106 - City Of Houston\20031 - White Oak Wwtp Phase ii\4.0 Cad\4.2 Electrical\E-08 DEMOLITION - WAS ELECTRICAL BUILDING PLAN.dwg
PLOT STYLE: ----
PLOTTED: 05/11/2026

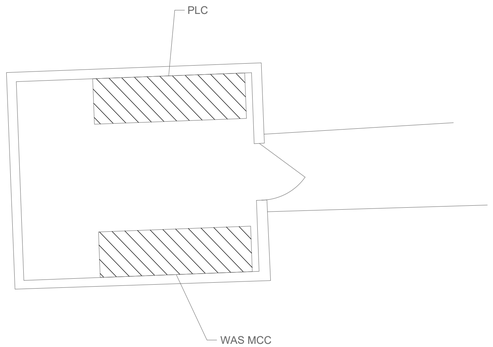

DEMOLITION - WAS
ELECTRICAL BUILDING PLAN

SCALE: 1/4" = 1'-0" (1)

0 2' 4' 8' 12'



NO.	DATE	REVISION	APP.

NOTES BY SYMBOL "(#)":

1. ELECTRICAL CONTRACTOR SHALL VERIFY SCOPE PRIOR TO STARTING WORK.
2. SEE ONE-LINE DIAGRAMS FOR EQUIPMENT DEMOLITION.

LEGEND:

DEMOLITION SCOPE

MBROH 20 ENGINEERING
11757 KATY FWY,
SUITE 625
HOUSTON, TX 77077
713-468-2545

THESE DOCUMENTS ARE FOR INTERIM REVIEW AND ARE NOT INTENDED FOR CONSTRUCTION, BIDDING, OR PERMIT PURPOSES.
HANS POURES
TEXAS P.E. NO. 131630
DATE: 11/5/2026

SURVEYED BY:
FB NO.

CITY OF HOUSTON
HOUSTON PUBLIC WORKS

WHITE OAKS WWTP IMPROVEMENTS

ELECTRICAL
DEMOLITION - WAS ELECTRICAL BUILDING PLAN

WBS NUMBER	FOR CITY OF HOUSTON USE ONLY
R-000265-0158-3	
DRAWING SCALE	
1/4" = 1'-0"	
CITY OF HOUSTON PM	
SHAHIDUR RAHMAN, PE	

PLOTTED: 05/11/2026
PLOT STYLE: ----
FILE PATH: P:\Projects\0106 - City Of Houston\20031 - White Oak Wwtp Phase ii\4.0 Cad\4.2 Electrical\E-09 DEMOLITION - WAS POWER PLAN.dwg

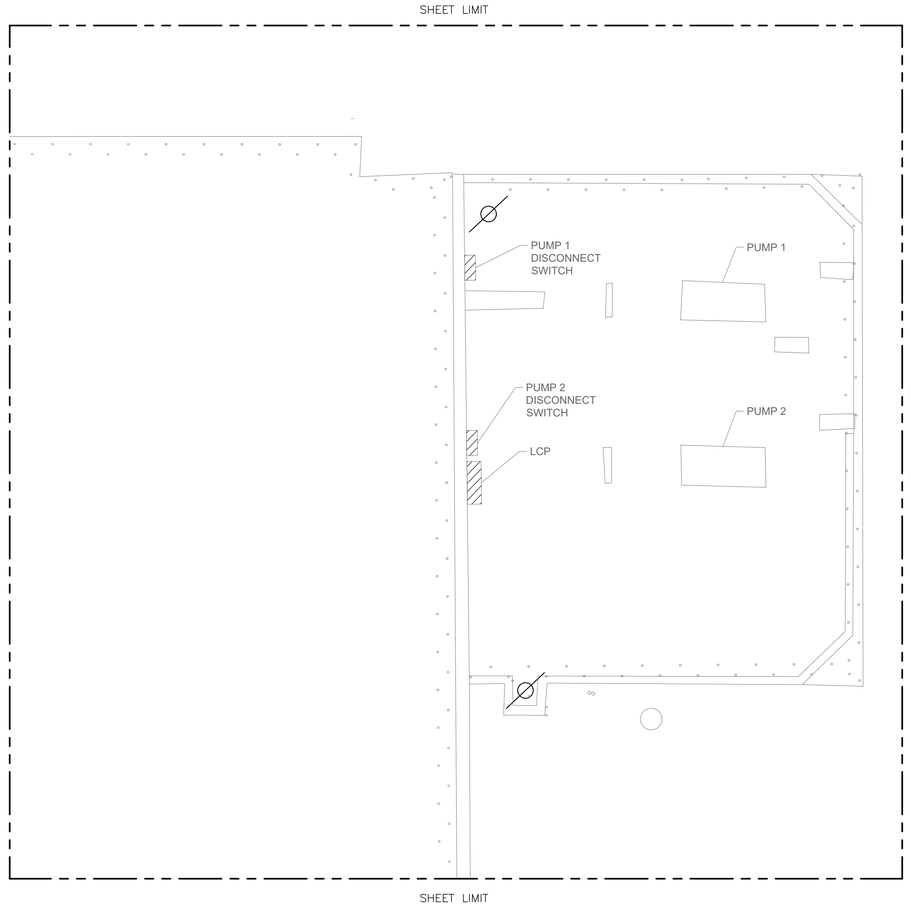

DEMOLITION - WAS POWER PLAN

SCALE: 1/4" = 1'-0"

0 2' 4' 8' 12'

NO.	DATE	REVISION	APP.

NOTES BY SYMBOL "⟨#⟩":

1. ELECTRICAL CONTRACTOR SHALL VERIFY SCOPE PRIOR TO STARTING WORK.
2. SEE ONE-LINE DIAGRAMS FOR EQUIPMENT DEMOLITION.

LEGEND:

AREA SCOPE BOUNDARY

DEMOLITION SCOPE

MBROH 20 ENGINEERING
11757 KATY FWY,
SUITE 625
HOUSTON, TX 77077
713-468-2545

SURVEYED BY:
FB NO.

THESE DOCUMENTS ARE FOR INTERIM REVIEW AND ARE NOT INTENDED FOR CONSTRUCTION, BIDDING, OR PERMIT PURPOSES.
HANS POURES
TEXAS P.E. NO. 131630
DATE: 11/5/2026

CITY OF HOUSTON
HOUSTON PUBLIC WORKS

WHITE OAKS WWTP IMPROVEMENTS

ELECTRICAL

DEMOLITION - WAS POWER PLAN

WBS NUMBER	FOR CITY OF HOUSTON USE ONLY
R-000265-0158-3	
DRAWING SCALE	
1/4" = 1'-0"	
CITY OF HOUSTON PM	
SHAHIDUR RAHMAN, PE	
SHEET NO. 134 OF 189	

E-09

PLOTTED: 05/11/2026
PLOT STYLE: ----
FILE PATH: P:\Projects\0106 - City Of Houston\20031 - White Oak Wwtp Phase ii\4.0 Cad\4.2 Electrical\E-10 DEMOLITION - ANALYZER BUILDING PLAN.dwg

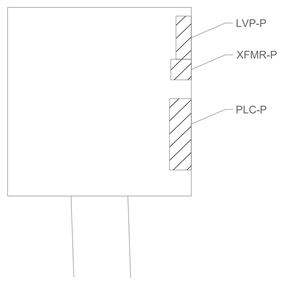

DEMOLITION - ANALYZER
BUILDING PLAN

SCALE: 1/4" = 1'-0" (1)

0 2' 4' 8' 12'



NO.	DATE	REVISION	APP.

NOTES BY SYMBOL "(#)":

1. ELECTRICAL CONTRACTOR SHALL VERIFY SCOPE PRIOR TO STARTING WORK.
2. SEE ONE-LINE DIAGRAMS FOR EQUIPMENT DEMOLITION.

LEGEND:

DEMOLITION SCOPE

MBROH 20 ENGINEERING
11757 KATY FWY,
SUITE 625
HOUSTON, TX 77077
713-468-2545

SURVEYED BY:
FB NO.

THESE DOCUMENTS ARE FOR INTERIM REVIEW AND ARE NOT INTENDED FOR CONSTRUCTION, BIDDING, OR PERMIT PURPOSES.
HANS POURES
TEXAS P.E. NO. 131630
DATE: 11/3/2026

CITY OF HOUSTON
HOUSTON PUBLIC WORKS

WHITE OAKS WWTP IMPROVEMENTS

ELECTRICAL
DEMOLITION - ANALYZER BUILDING PLAN

WBS NUMBER	FOR CITY OF HOUSTON USE ONLY
R-000265-0158-3	
DRAWING SCALE	
1/4" = 1'-0"	
CITY OF HOUSTON PM	
SHAHIDUR RAHMAN, PE	
SHEET NO. 135 OF 189	

E-10

SITE - LIGHTING SCHEDULE

ITEM	DESCRIPTION	MOUNTING METHOD	LAMP QUANTITY	LAMP TYPE	LUMINAIRE SPECIFICATIONS MANUFACTURER	CATALOG	VOLTS	VA
D1	EAX2 LED AREA LUMINAIRE	POLE MH:16'	22	4000K	LITHONIA	EAX2 ALO SSW2 SO UVOLT ASRP PER DDB	UVOLT 120-347V	
D2	EAX2 LED AREA LUMINAIRE	STANCHION POLE MH:7.5'	13	4000K	LITHONIA	EAX2 ALO SSW2 SO UVOLT ASRP PER DDB	UVOLT 120-347V	
D3	EAX2 LED AREA LUMINAIRE	WALL MH:14'	6	4000K	LITHONIA	EAX2 ALO SSW2 SO UVOLT ASRP PER DDB	UVOLT 120-347V	

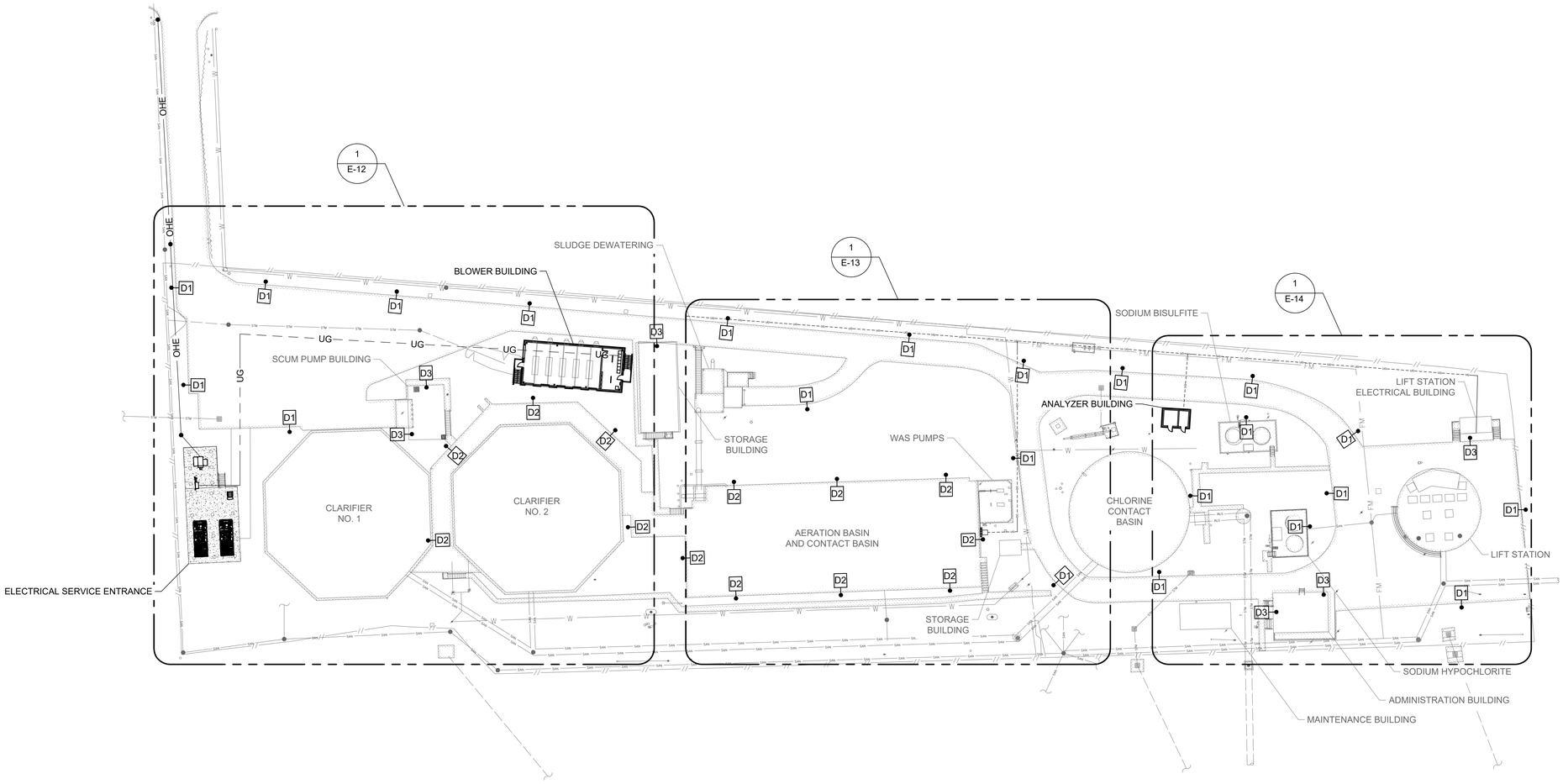

MODIFIED - OVERALL SITE PLAN

SCALE: 1" = 40'

0 20' 40' 80' 120'

NOTES BY SYMBOL "⟨#⟩":

1. ELECTRICAL CONTRACTOR SHALL VERIFY SCOPE PRIOR TO STARTING WORK.

LEGEND:

AREA SCOPE BOUNDARY

NO.	DATE	REVISION	APP.

MBROH ENGINEERING 20
11757 KATY FWY,
SUITE 625
HOUSTON, TX 77077
713-468-2545

SURVEYED BY:

FB NO.

THESE DOCUMENTS ARE FOR INTERIM REVIEW AND ARE NOT INTENDED FOR CONSTRUCTION, BIDDING, OR PERMIT PURPOSES.

HANS POURES

TEXAS P.E. NO. 131630

DATE: 10/28/2026

CITY OF HOUSTON
HOUSTON PUBLIC WORKS

WHITE OAKS WWTP IMPROVEMENTS

ELECTRICAL
MODIFIED - OVERALL SITE PLAN

WBS NUMBER	FOR CITY OF HOUSTON USE ONLY
R-000265-0158-3	
DRAWING SCALE	
1" = 40'	
CITY OF HOUSTON PM	
SHAHIDUR RAHMAN, PE	

E-11 SHEET NO. 136 OF 189

PLOTTED: 05/11/2026
PLOT STYLE: ----
FILE PATH: P:\Projects\0106 - City Of Houston\20031 - White Oak Wwtp Phase in\4.0 Cad\4.2 Electrical\E-11 MODIFIED - Overall Site Plan.dwg

PLOTTED: 05/11/2026
PLOT STYLE: ----
FILE PATH: P:\Projects\0106 - City Of Houston\20031 - White Oak Wwtp Phase iii\4.0 Cad\4.2 Electrical\E-12 MODIFIED - PARTIAL SITE PLAN I.dwg

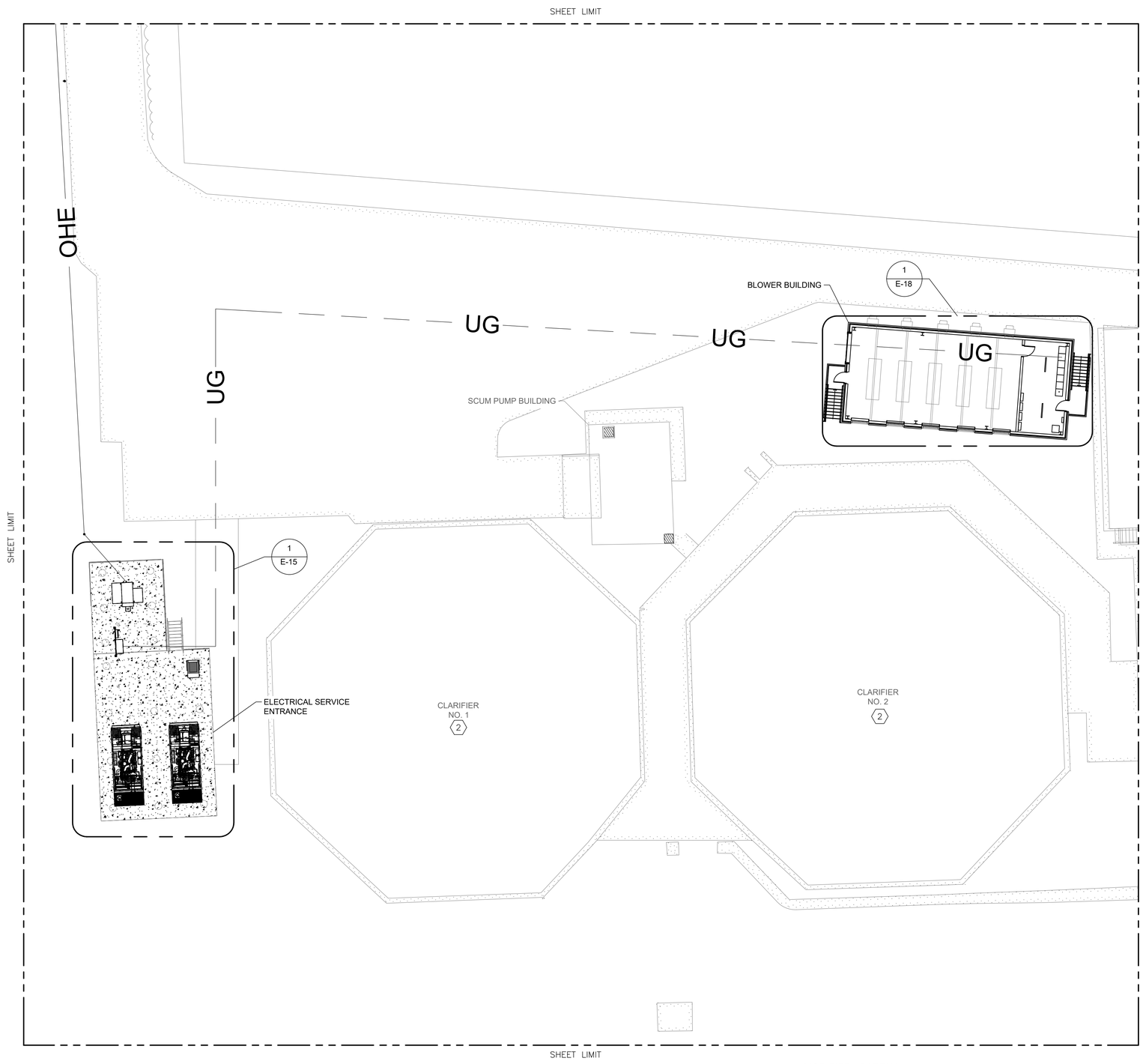

MODIFIED - PARTIAL SITE PLAN I

SCALE: 1/16" = 1'-0"

0 8' 16' 32' 48'

NOTES BY SYMBOL "#":

1. ELECTRICAL CONTRACTOR SHALL VERIFY SCOPE PRIOR TO STARTING WORK.
2. ELECTRICAL CONTRACTOR SHALL RECONNECT NEW MOTORS TO EXISTING CIRCUIT.

LEGEND:

AREA SCOPE BOUNDARY

NO.	DATE	REVISION	APP.

MBROH ENGINEERING
11757 KATY FWY,
SUITE 625
HOUSTON, TX 77077
713-468-2545

SURVEYED BY:
FB NO.

THESE DOCUMENTS ARE FOR INTERIM REVIEW AND ARE NOT INTENDED FOR CONSTRUCTION, BIDDING, OR PERMIT PURPOSES.
HANS POURES
TEXAS P.E. NO. 131630
DATE: 11/5/2026

CITY OF HOUSTON
HOUSTON PUBLIC WORKS

WHITE OAKS WWTP IMPROVEMENTS

ELECTRICAL
MODIFIED - PARTIAL SITE PLAN I

WBS NUMBER	FOR CITY OF HOUSTON USE ONLY
R-000265-0158-3	
DRAWING SCALE	
1/16" = 1'-0"	
CITY OF HOUSTON PM	
SHAHIDUR RAHMAN, PE	

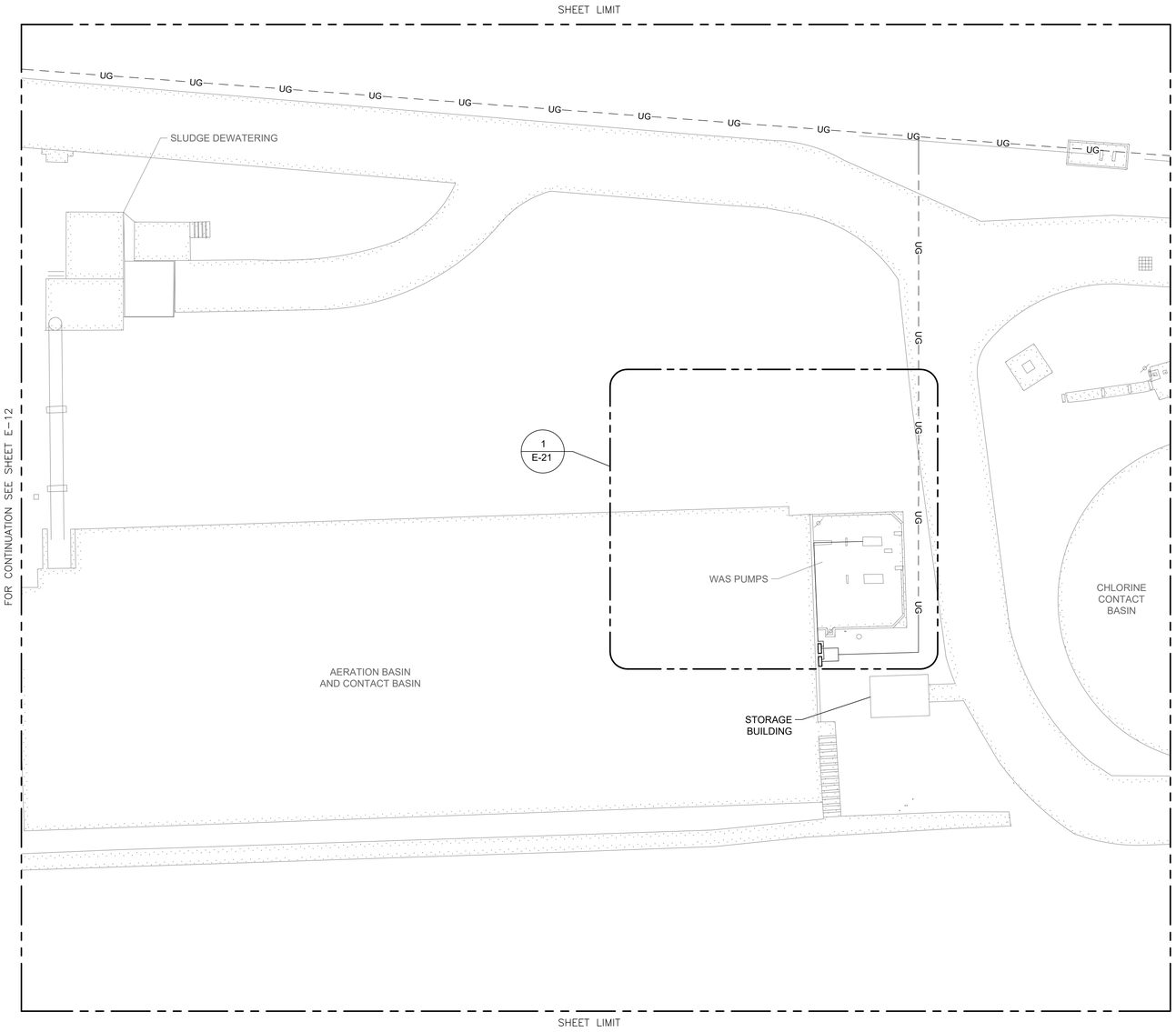

MODIFIED - PARTIAL
SITE PLAN II

SCALE: 1/16" = 1'-0"

0 8' 16' 32' 48'

NOTES BY SYMBOL "⟨#⟩":

1. ELECTRICAL CONTRACTOR SHALL VERIFY SCOPE PRIOR TO STARTING WORK.

LEGEND:

AREA SCOPE BOUNDARY

NO.	DATE	REVISION	APP.

MBROH 20 ENGINEERING
11757 KATY FWY,
SUITE 625
HOUSTON, TX 77077
713-468-2545

SURVEYED BY:

FB NO.

THESE DOCUMENTS ARE FOR INTERIM REVIEW AND ARE NOT INTENDED FOR CONSTRUCTION, BIDDING, OR PERMIT PURPOSES.

HANS POURES

TEXAS P.E. NO. 131630

DATE: 10/28/2026

CITY OF HOUSTON
HOUSTON PUBLIC WORKS

WHITE OAKS WWTP IMPROVEMENTS

ELECTRICAL
MODIFIED - PARTIAL SITE PLAN II

WBS NUMBER	FOR CITY OF HOUSTON USE ONLY
R-000265-0158-3	
DRAWING SCALE	
1/16" = 1'-0"	
CITY OF HOUSTON PM	
SHAHIDUR RAHMAN, PE	
SHEET NO. 138 OF 189	

E-13

PLOTTED: 05/11/2026
PLOT STYLE: ----
FILE PATH: P:\Projects\0106 - City Of Houston\20031 - White Oak Wwtp Phase ii\4.0 Cad\4.2 Electrical\E-13 MODIFIED - PARTIAL SITE PLAN II.dwg

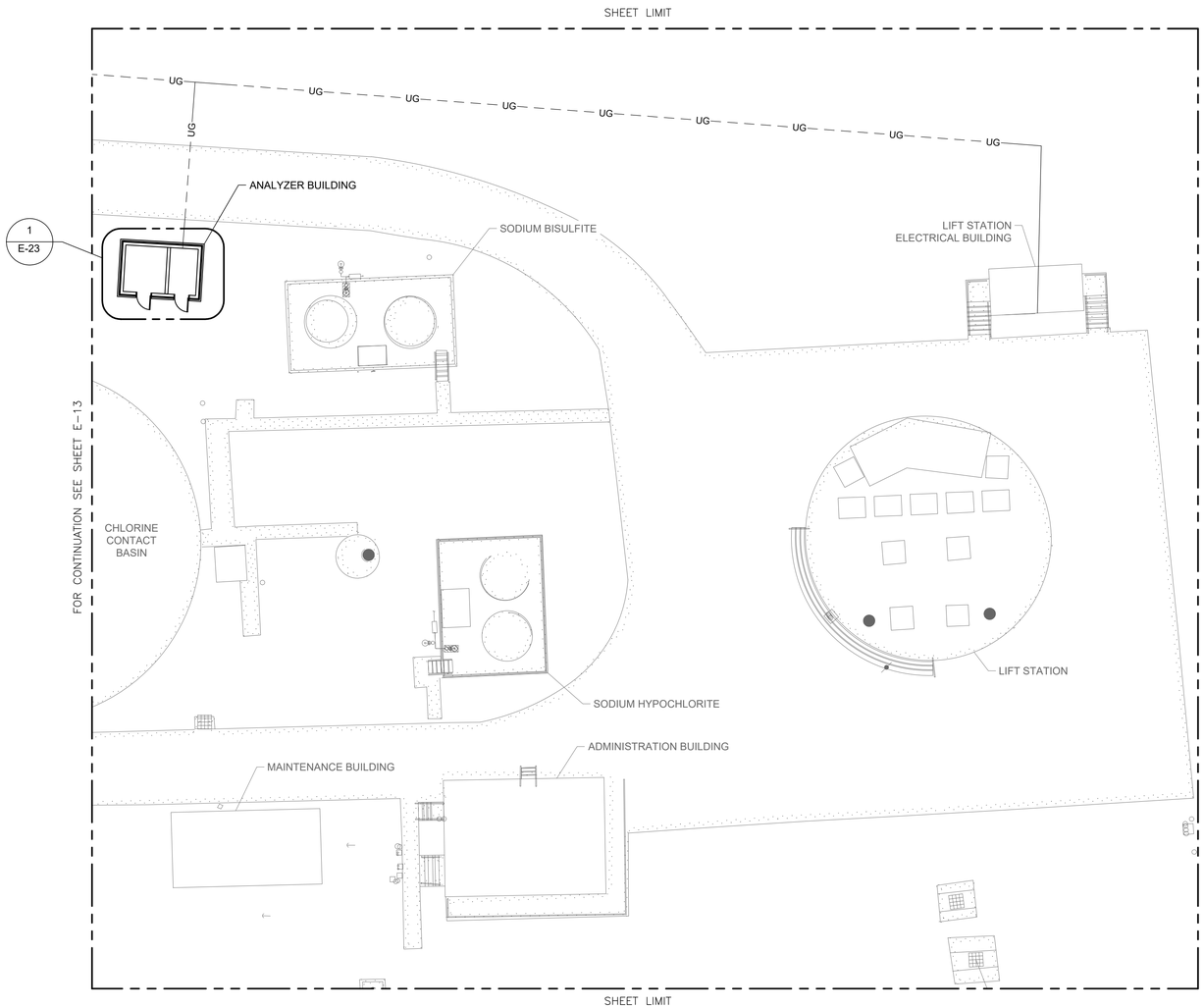

MODIFIED - PARTIAL
SITE PLAN III

SCALE: 1/16" = 1'-0" (1)

0 8' 16' 32' 48'

NOTES BY SYMBOL "(#)":

1. ELECTRICAL CONTRACTOR SHALL VERIFY SCOPE PRIOR TO STARTING WORK.

LEGEND:

AREA SCOPE BOUNDARY

NO.	DATE	REVISION	APP.

MBROH ENGINEERING 20
11757 KATY FWY,
SUITE 625
HOUSTON, TX 77077
713-468-2545

SURVEYED BY:
FB NO.

THESE DOCUMENTS ARE FOR INTERIM REVIEW AND ARE NOT INTENDED FOR CONSTRUCTION, BIDDING, OR PERMIT PURPOSES.

HANS POURES
TEXAS P.E. NO. 131630
DATE: 11/5/2026

CITY OF HOUSTON
HOUSTON PUBLIC WORKS

WHITE OAKS WWTP IMPROVEMENTS

ELECTRICAL
MODIFIED - PARTIAL SITE PLAN III

WBS NUMBER	FOR CITY OF HOUSTON USE ONLY
R-000265-0158-3	
DRAWING SCALE	
1/16" = 1'-0"	
CITY OF HOUSTON PM	
SHAHIDUR RAHMAN, PE	

PLOTTED: 05/11/2026
PLOT STYLE: ----
FILE PATH: P:\Projects\0106 - City Of Houston\20031 - White Oak Wwtp Phase ii\4.0 Cad\4.2 Electrical\E-14 MODIFIED - PARTIAL SITE PLAN III.dwg

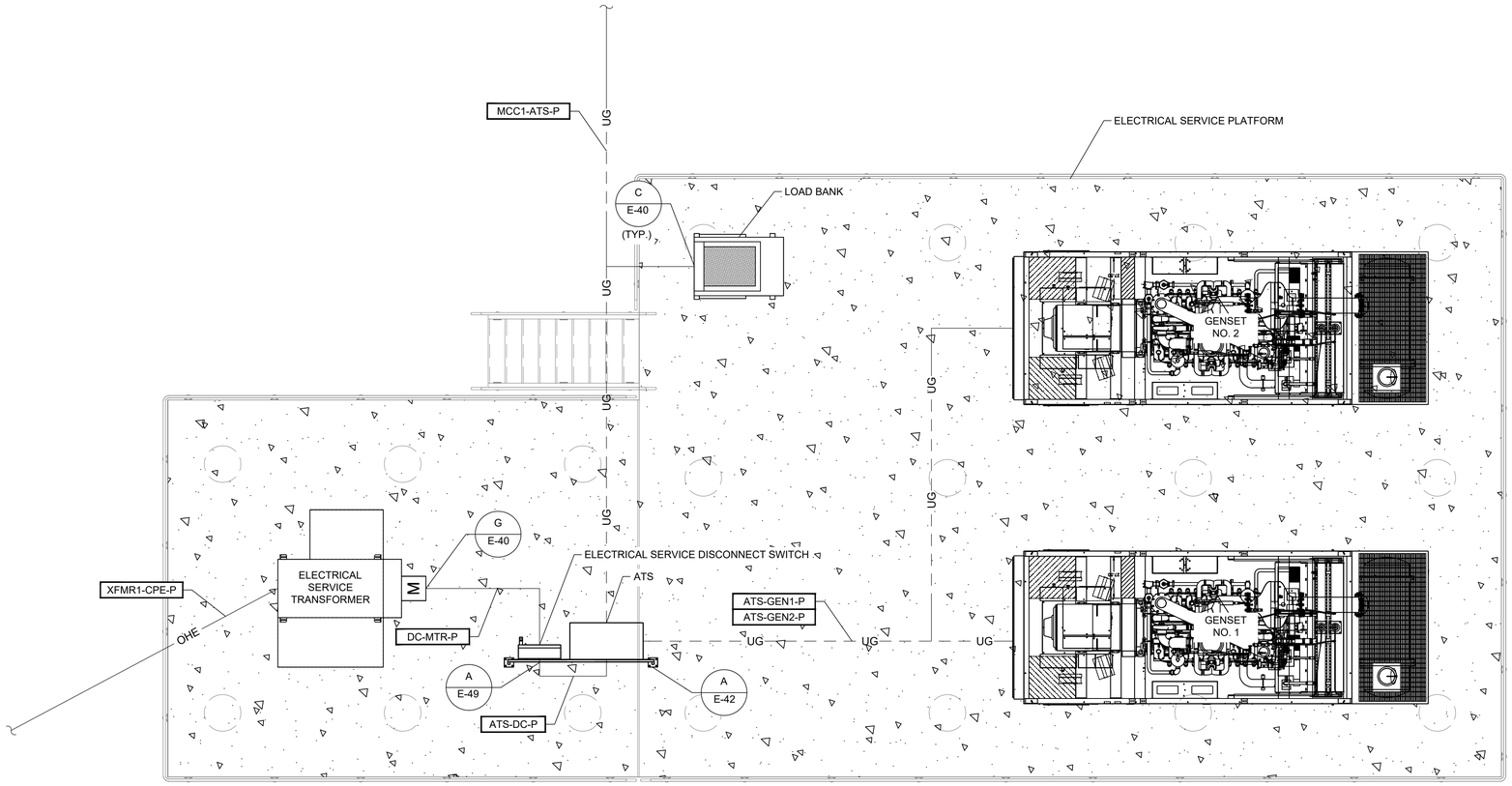

1
S-10

MODIFIED - ELECTRICAL SERVICE
ENTRANCE POWER PLAN

SCALE: 1/4" = 1'-0" (1)

0 2' 4' 8' 12'

NOTES BY SYMBOL "(#)":

1. ELECTRICAL CONTRACTOR SHALL VERIFY SCOPE PRIOR TO STARTING WORK.

NO.	DATE	REVISION	APP.

MBROH ENGINEERING 20
11757 KATY FWY,
SUITE 625
HOUSTON, TX 77077
713-468-2545

SURVEYED BY:
FB NO.

THESE DOCUMENTS ARE FOR INTERIM REVIEW AND ARE NOT INTENDED FOR CONSTRUCTION, BIDDING, OR PERMIT PURPOSES.
HANS POURES
TEXAS P.E. NO. 131630
DATE: 11/5/2026

CITY OF HOUSTON
HOUSTON PUBLIC WORKS

WHITE OAKS WWTP IMPROVEMENTS

ELECTRICAL

MODIFIED - ELECTRICAL SERVICE ENTRANCE POWER PLAN

WBS NUMBER	FOR CITY OF HOUSTON USE ONLY
R-000265-0158-3	
DRAWING SCALE	
1/4" = 1'-0"	
CITY OF HOUSTON PM	
SHAHIDUR RAHMAN, PE	

PLOTTED: 05/11/2026
PLOT STYLE: ----
FILE PATH: P:\Projects\0106 - City Of Houston\20031 - White Oak Wwtp Phase ii\4.0 Cad\4.2 Electrical\E-15 MODIFIED - ELECTRICAL SERVICE ENTRANCE POWER PLAN.dwg

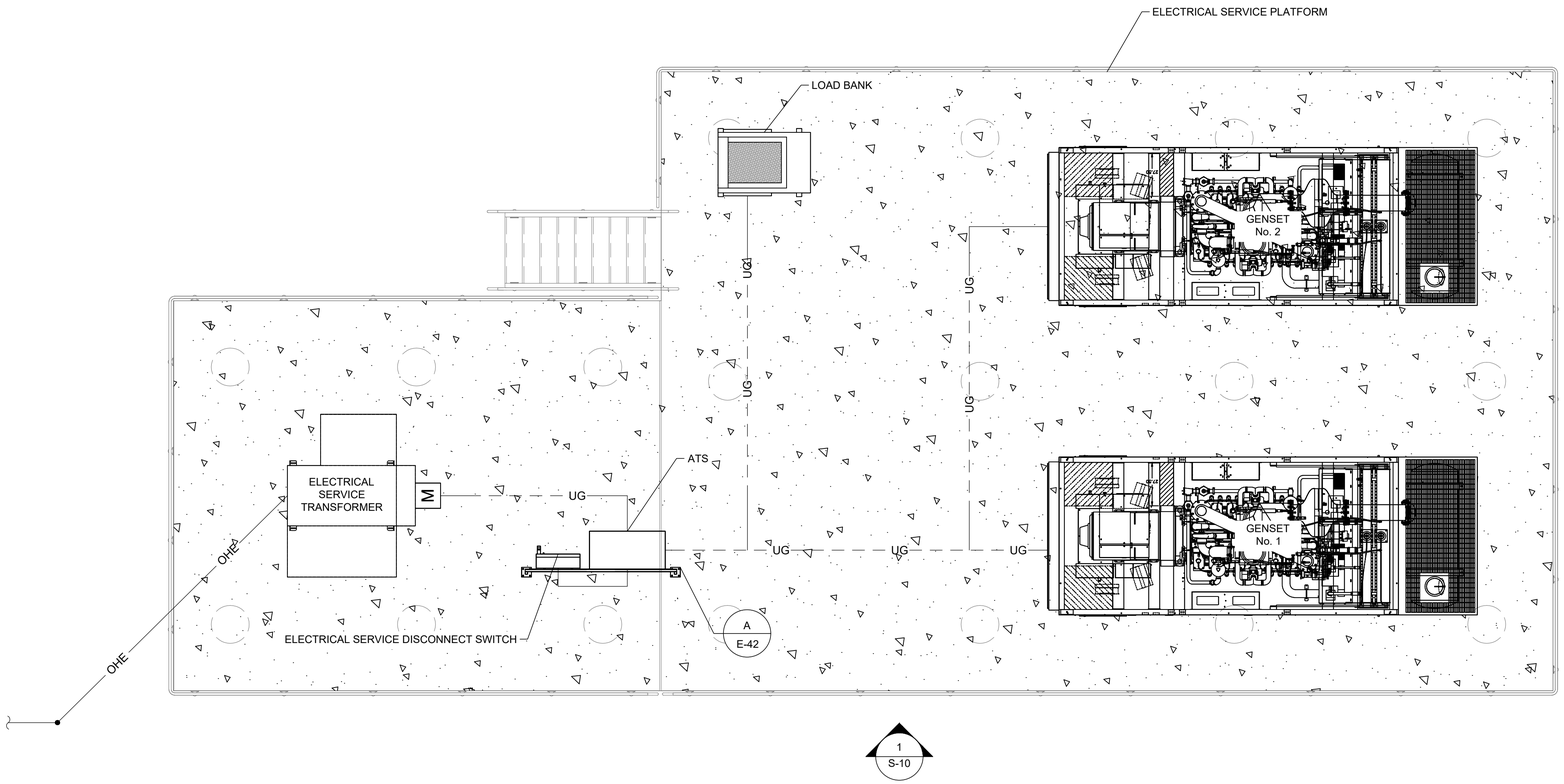

MODIFIED - ELECTRICAL SERVICE
ENTRANCE CONTROL PLAN

SCALE: 1/4" = 1'-0" (1)

0 2' 4' 8' 12'

NOTES BY SYMBOL "(#)":

1. ELECTRICAL CONTRACTOR SHALL VERIFY SCOPE PRIOR TO STARTING WORK.

NO.	DATE	REVISION	APP.

MBROH 20 ENGINEERING
11757 KATY FWY,
SUITE 625
HOUSTON, TX 77077
713-468-2545

SURVEYED BY:
FB NO.

THESE DOCUMENTS ARE FOR INTERIM REVIEW AND ARE NOT INTENDED FOR CONSTRUCTION, BIDDING, OR PERMIT PURPOSES.
HANS POURES
TEXAS P.E. NO. 131630
DATE: 11/5/2026

CITY OF HOUSTON
HOUSTON PUBLIC WORKS

WHITE OAKS WWTP IMPROVEMENTS

ELECTRICAL

MODIFIED - ELECTRICAL SERVICE ENTRANCE CONTROL PLAN

WBS NUMBER	FOR CITY OF HOUSTON USE ONLY
R-000265-0158-3	
DRAWING SCALE	
1/4" = 1'-0"	
CITY OF HOUSTON PM	
SHAHIDUR RAHMAN, PE	

PLOTTED: 05/11/2026
PLOT STYLE: ----
FILE PATH: P:\Projects\0106 - City Of Houston\20031 - White Oak Wwtp Phase ii\4.0 Cad\4.2 Electrical\E-16 MODIFIED - ELECTRICAL SERVICE ENTRANCE CONTROL PLAN.dwg

PLOTTED: 05/11/2026
PLOT STYLE: ----
FILE PATH: P:\Projects\0106 - City Of Houston\20031 - White Oak WWTP Phase II\4.0 CAD\4.2 Electrical\E-17 MODIFIED - BLOWER BUILDING POWER PLAN.dwg

KEY TAGS "◇#":

480VAC

1	MCC1-ATS-P
2	RVSS1-MCC1-P
3	B1-RVSS1-P
4	RVSS2-MCC1-P
5	B2-RVSS2-P
6	RVSS3-MCC1-P
7	B3-RVSS3-P
8	RVSS4-MCC1-P
9	B4-RVSS4-P
10	XXX-XXX-P

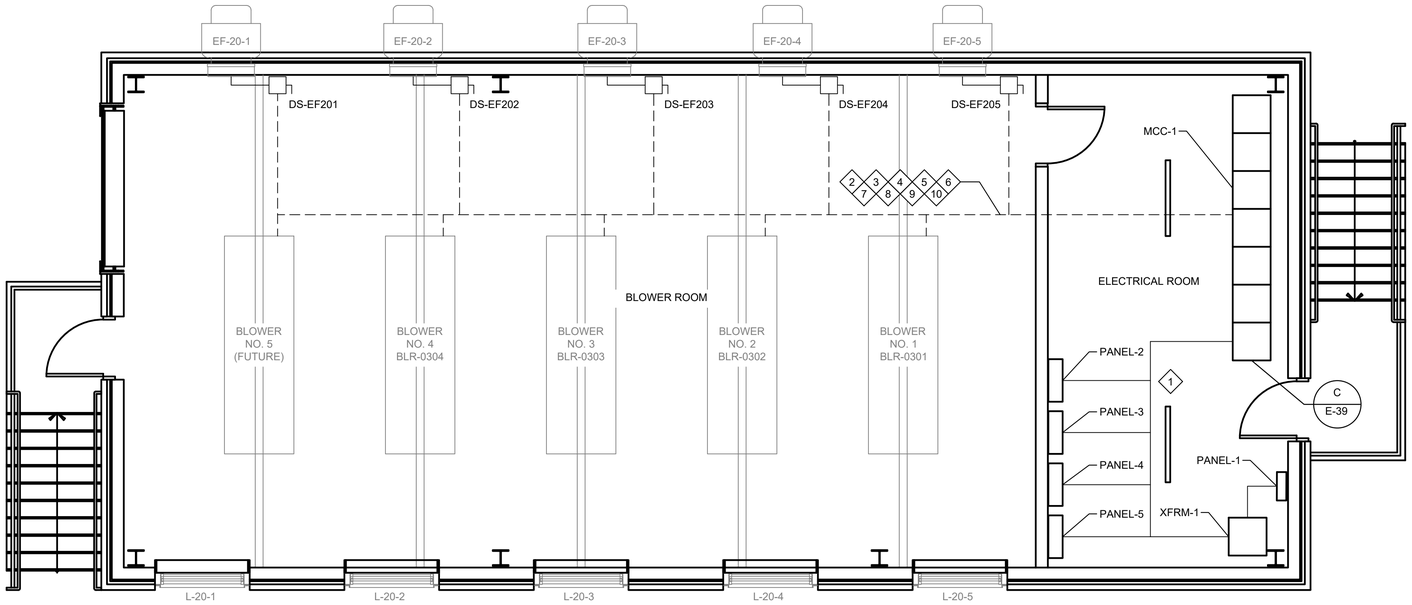

MODIFIED - BLOWER
BUILDING POWER PLAN
SCALE: 1/4" = 1'-0" (1)

0 2' 4' 8' 12'

NOTES BY SYMBOL "⬡#":

1. ELECTRICAL CONTRACTOR SHALL VERIFY SCOPE PRIOR TO STARTING WORK.

NO.	DATE	REVISION	APP.

MBROH ENGINEERING 20
11757 KATY FWY,
SUITE 625
HOUSTON, TX 77077
713-468-2545

SURVEYED BY:
FB NO.

THESE DOCUMENTS ARE FOR INTERIM REVIEW AND ARE NOT INTENDED FOR CONSTRUCTION, BIDDING, OR PERMIT PURPOSES.
HANS POURES
TEXAS P.E. NO. 131630
DATE: 11/5/2026

CITY OF HOUSTON
HOUSTON PUBLIC WORKS

WHITE OAKS WWTP IMPROVEMENTS

ELECTRICAL
MODIFIED - BLOWER BUILDING POWER PLAN

WBS NUMBER	FOR CITY OF HOUSTON USE ONLY
R-000265-0158-3	
DRAWING SCALE	
1/4" = 1'-0"	
CITY OF HOUSTON PM	
SHAHIDUR RAHMAN, PE	

BLOWER BUILDING - LIGHTING SCHEDULE

ITEM	DESCRIPTION	MOUNTING METHOD	LAMP		LUMINAIRE SPECIFICATIONS			
			QUANTITY	TYPE	MANUFACTURER	CATALOG	VOLTS	VA
A	PETROLUX LED LOW BAY, 10,000 LUMEN, WIDE, GLASS LENS, BLACK FINISH	PENDANT	10	LED 4000K	HOLOPHANE	PXLW 10000LM WD MVOLT 40K 90CRI PM DBXD	MVOLT (120-277)	
B	HZL1D LED STRIPLIGHT TEMPERATURE RANGE OF -40'C TO 30'C, DAMP LOCATION LISTED	SUSPENDED FROM CEILING	2	LED 4000K	HOLOPHANE	HZL1D L48 7000LM FST MVOLT 40K 90CRI WH	MVOLT (120-277)	

NOTES BY SYMBOL "⟨#⟩":

1. ELECTRICAL CONTRACTOR SHALL VERIFY SCOPE PRIOR TO STARTING WORK.

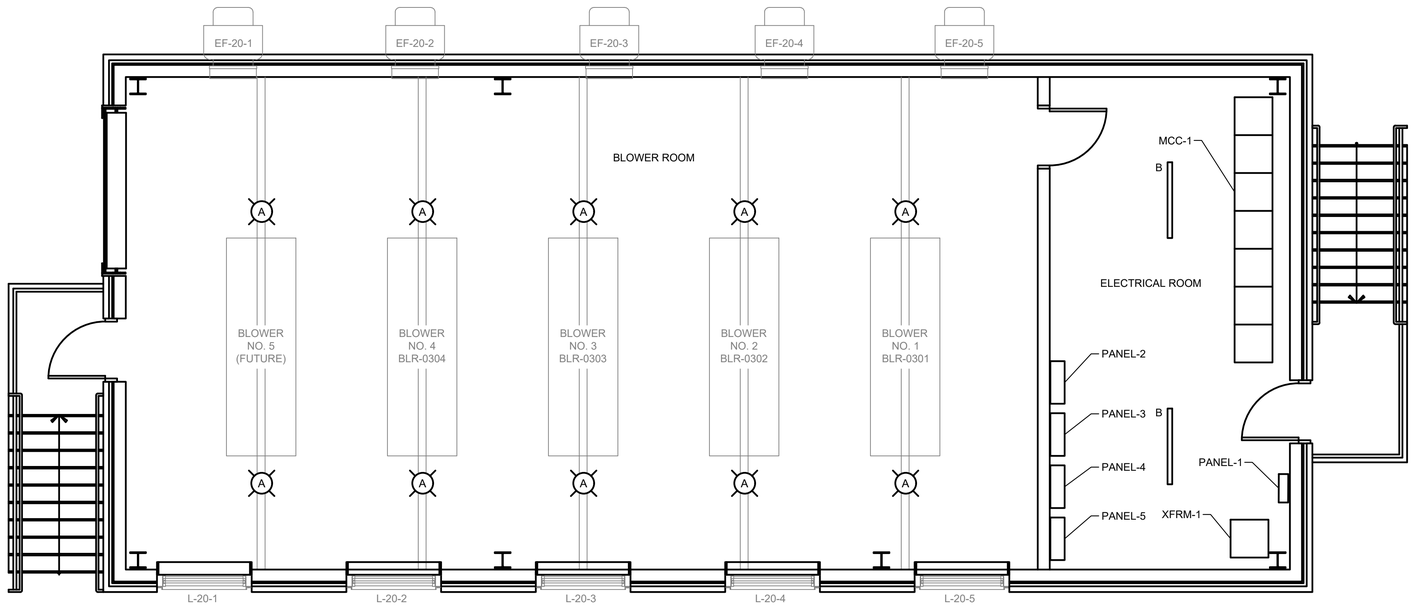

MODIFIED - BLOWER BUILDING LIGHTING PLAN

SCALE: 1/4" = 1'-0" ⟨1⟩

0 2' 4' 8' 12'

NO.	DATE	REVISION	APP.

MBROH ENGINEERING 20
11757 KATY FWY,
SUITE 625
HOUSTON, TX 77077
713-468-2545

SURVEYED BY:

FB NO.

THESE DOCUMENTS ARE FOR INTERIM REVIEW AND ARE NOT INTENDED FOR CONSTRUCTION, BIDDING, OR PERMIT PURPOSES.

HANS POURES

TEXAS P.E. NO. 131630

DATE: 11/5/2026

CITY OF HOUSTON
HOUSTON PUBLIC WORKS

WHITE OAKS WWTP IMPROVEMENTS

ELECTRICAL

MODIFIED - BLOWER BUILDING LIGHTING PLAN

WBS NUMBER	FOR CITY OF HOUSTON USE ONLY
R-000265-0158-3	
DRAWING SCALE	
1/4" = 1'-0"	
CITY OF HOUSTON PM	
SHAHIDUR RAHMAN, PE	
SHEET NO. 143 OF 189	

E-18

PLOTTED: 05/11/2026
PLOT STYLE: ----
FILE PATH: P:\Projects\0106 - City Of Houston\20031 - White Oak WWTP Phase II\4.0 CAD\4.2 Electrical\E-18 MODIFIED - BLOWER BUILDING LIGHTING PLAN.dwg

FILE PATH: P:\Projects\0106 - City Of Houston\20031 - White Oak WWTP Phase II\4.0 CAD\4.2 Electrical\E-19 MODIFIED - BLOWER BUILDING CONTROL PLAN.dwg
PLOT STYLE: ----
PLOTTED: 05/11/2026

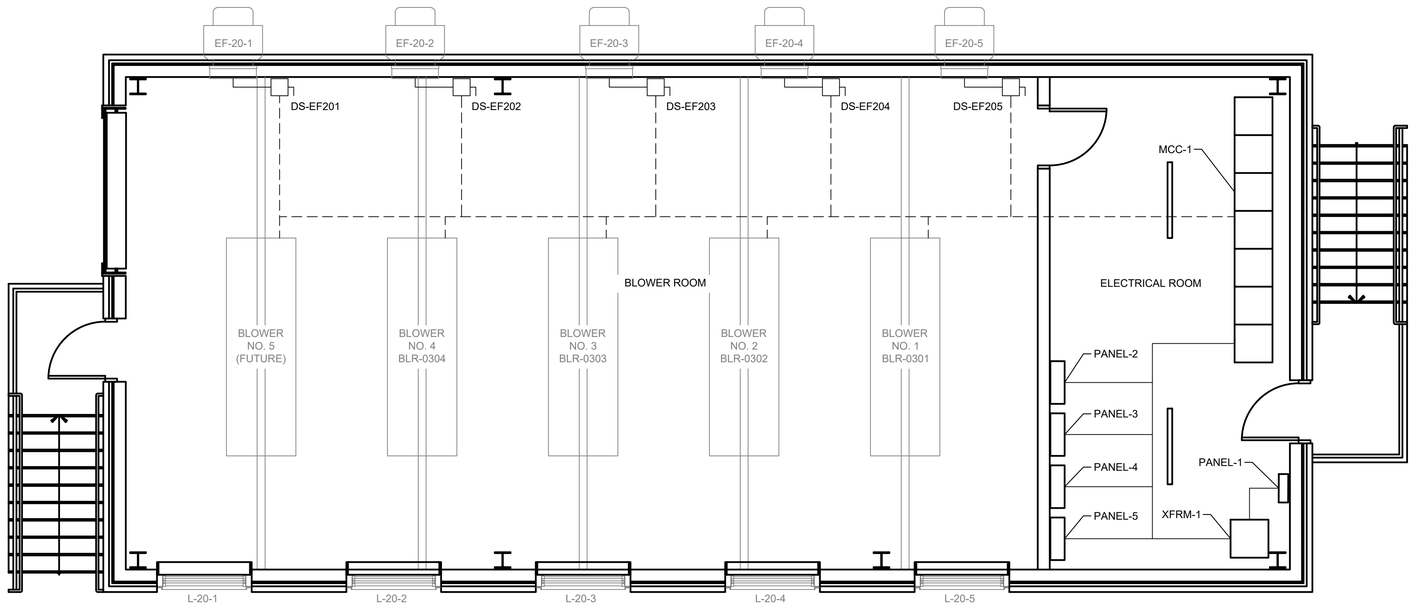

MODIFIED - BLOWER
BUILDING CONTROL PLAN

SCALE: 1/4" = 1'-0" (1)

0 2' 4' 8' 12'



NOTES BY SYMBOL "(#)":

1. ELECTRICAL CONTRACTOR SHALL VERIFY SCOPE PRIOR TO STARTING WORK.

NO.	DATE	REVISION	APP.

MBROH ENGINEERING 20
11757 KATY FWY,
SUITE 625
HOUSTON, TX 77077
713-468-2545

SURVEYED BY:
FB NO.

THESE DOCUMENTS ARE FOR INTERIM REVIEW AND ARE NOT INTENDED FOR CONSTRUCTION, BIDDING, OR PERMIT PURPOSES.
HANS POURES
TEXAS P.E. NO. 131630
DATE: 11/5/2026

CITY OF HOUSTON
HOUSTON PUBLIC WORKS

WHITE OAKS WWTP IMPROVEMENTS

ELECTRICAL
MODIFIED - BLOWER BUILDING CONTROL PLAN

WBS NUMBER	FOR CITY OF HOUSTON USE ONLY
R-000265-0158-3	
DRAWING SCALE	
1/4" = 1'-0"	
CITY OF HOUSTON PM	
SHAHIDUR RAHMAN, PE	
SHEET NO. 144 OF 189	

FILE PATH: P:\Projects\0106 - City Of Houston\20031 - White Oak WWTP Phase II\4.0 CAD\4.2 Electrical\E-20 MODIFIED - WAS POWER PLAN.dwg
PLOT STYLE: ----
PLOTTED: 05/11/2026

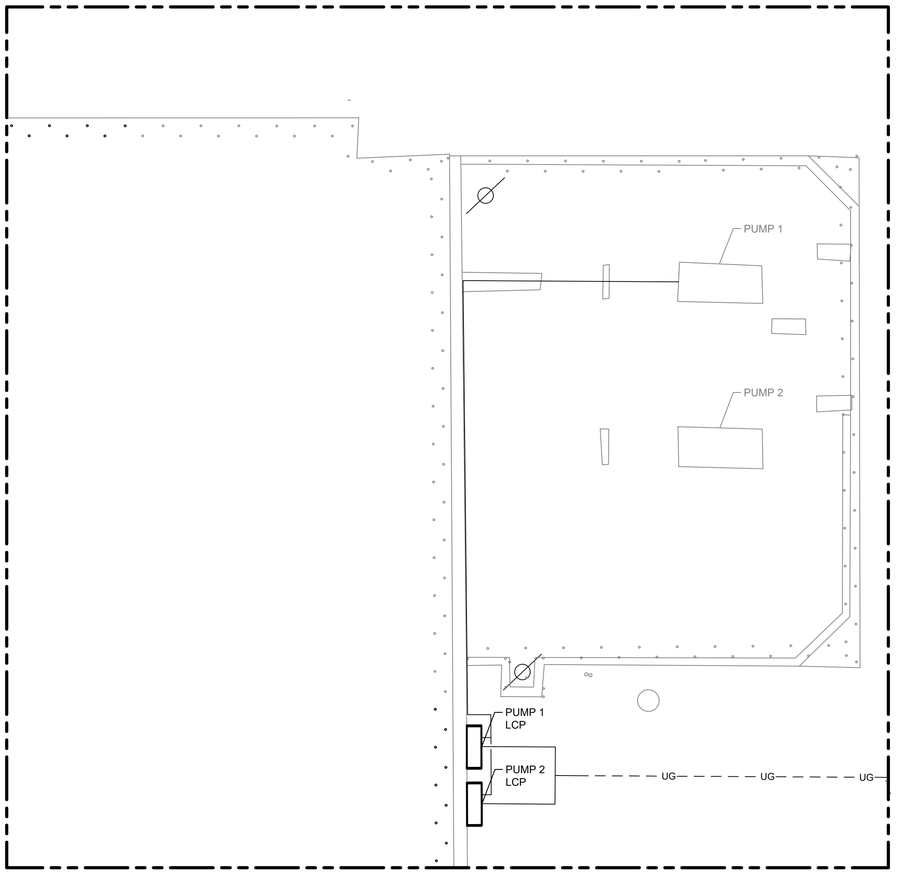

MODIFIED - WAS POWER PLAN

SCALE: 1/4" = 1'-0"

0 2' 4' 8' 12'

NOTES BY SYMBOL "⟨#⟩":

1. ELECTRICAL CONTRACTOR SHALL VERIFY SCOPE PRIOR TO STARTING WORK.

LEGEND:

AREA SCOPE BOUNDARY

NO.	DATE	REVISION	APP.

MBROH 20 ENGINEERING
11757 KATY FWY,
SUITE 625
HOUSTON, TX 77077
713-468-2545

SURVEYED BY:
FB NO.

THESE DOCUMENTS ARE FOR INTERIM REVIEW AND ARE NOT INTENDED FOR CONSTRUCTION, BIDDING, OR PERMIT PURPOSES.
HANS POURES
TEXAS P.E. NO. 131630
DATE: 11/5/2026

CITY OF HOUSTON
HOUSTON PUBLIC WORKS

WHITE OAKS WWTP IMPROVEMENTS

ELECTRICAL

MODIFIED - WAS POWER PLAN

WBS NUMBER	FOR CITY OF HOUSTON USE ONLY
R-000265-0158-3	
DRAWING SCALE	
1/4" = 1'-0"	
CITY OF HOUSTON PM	
SHAHIDUR RAHMAN, PE	

FILE PATH: P:\Projects\0106 - City Of Houston\20031 - White Oak WWTP Phase II\4.0 CAD\4.2 Electrical\E-21 MODIFIED - WAS CONTROL PLAN.dwg
PLOT STYLE: ----
PLOTTED: 05/11/2026

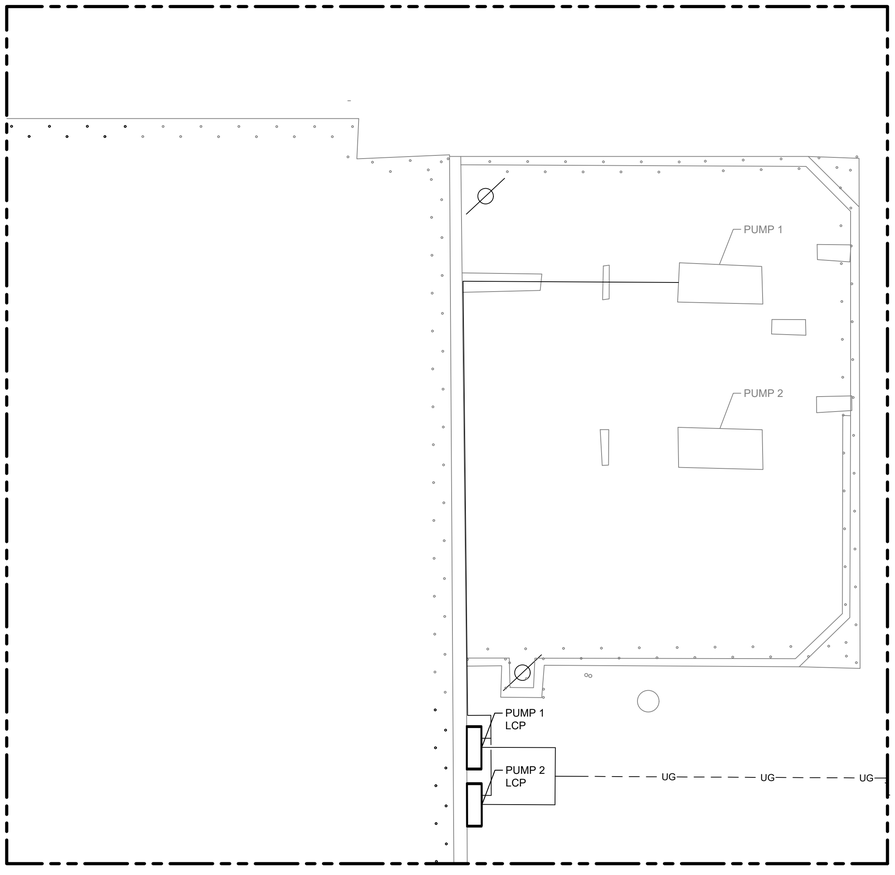

MODIFIED - WAS
CONTROL PLAN

SCALE: 1/4" = 1'-0"

0 2' 4' 8' 12'

NOTES BY SYMBOL "⬡#":

1. ELECTRICAL CONTRACTOR SHALL VERIFY SCOPE PRIOR TO STARTING WORK.

LEGEND:

AREA SCOPE BOUNDARY

NO.	DATE	REVISION	APP.

MBROH 20 ENGINEERING
11757 KATY FWY,
SUITE 625
HOUSTON, TX 77077
713-468-2545

SURVEYED BY:
FB NO.

THESE DOCUMENTS ARE FOR INTERIM REVIEW AND ARE NOT INTENDED FOR CONSTRUCTION, BIDDING, OR PERMIT PURPOSES.
HANS POURES
TEXAS P.E. NO. 131630
DATE: 11/5/2026

CITY OF HOUSTON
HOUSTON PUBLIC WORKS

WHITE OAKS WWTP IMPROVEMENTS

ELECTRICAL
MODIFIED - WAS CONTROL PLAN

WBS NUMBER	FOR CITY OF HOUSTON USE ONLY
R-000265-0158-3	
DRAWING SCALE	
1/4" = 1'-0"	
CITY OF HOUSTON PM	
SHAHIDUR RAHMAN, PE	

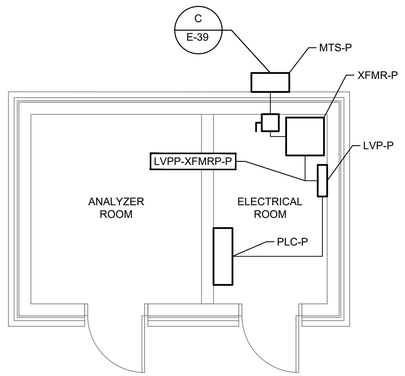

MODIFIED - ANALYZER
BUILDING POWER PLAN

SCALE: 1/4" = 1'-0" (1)

0 2' 4' 8' 12'



NO.	DATE	REVISION	APP.

NOTES BY SYMBOL "(#)":

1. ELECTRICAL CONTRACTOR SHALL VERIFY SCOPE PRIOR TO STARTING WORK.

MBROH 20 ENGINEERING
11757 KATY FWY,
SUITE 625
HOUSTON, TX 77077
713-468-2545

SURVEYED BY:
FB NO.

THESE DOCUMENTS ARE FOR INTERIM REVIEW AND ARE NOT INTENDED FOR CONSTRUCTION, BIDDING, OR PERMIT PURPOSES.
HANS POURES
TEXAS P.E. NO. 131630
DATE: 11/5/2026

CITY OF HOUSTON
HOUSTON PUBLIC WORKS

WHITE OAKS WWTP IMPROVEMENTS

ELECTRICAL
MODIFIED - ANALYZER
BUILDING POWER PLAN

WBS NUMBER	FOR CITY OF HOUSTON USE ONLY
R-000265-0158-3	
DRAWING SCALE	
1/4" = 1'-0"	
CITY OF HOUSTON PM	
SHAHIDUR RAHMAN, PE	
SHEET NO. 147 OF 189	

E-22

FILE PATH: P:\Projects\0106 - City Of Houston\20031 - White Oak WWTP Phase II\4.0 CAD\4.2 Electrical\E-22 MODIFIED - ANALYZER BUILDING POWER PLAN.dwg
PLOT STYLE: ----
PLOTTED: 05/11/2026

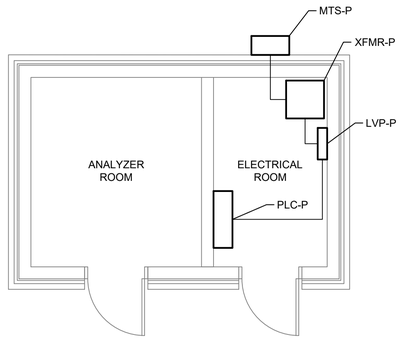

MODIFIED - ANALYZER
BUILDING CONTROL PLAN

SCALE: 1/4" = 1'-0" (1)

0 2' 4' 8' 12'



NO.	DATE	REVISION	APP.

NOTES BY SYMBOL "(#)":

1. ELECTRICAL CONTRACTOR SHALL VERIFY SCOPE PRIOR TO STARTING WORK.

MBROH 20 ENGINEERING
11757 KATY FWY,
SUITE 625
HOUSTON, TX 77077
713-468-2545

SURVEYED BY:
FB NO.

THESE DOCUMENTS ARE FOR INTERIM REVIEW AND ARE NOT INTENDED FOR CONSTRUCTION, BIDDING, OR PERMIT PURPOSES.
HANS POURES
TEXAS P.E. NO. 131630
DATE: 11/5/2026

CITY OF HOUSTON
HOUSTON PUBLIC WORKS

WHITE OAKS WWTP IMPROVEMENTS

ELECTRICAL
MODIFIED - ANALYZER BUILDING CONTROL PLAN

WBS NUMBER	FOR CITY OF HOUSTON USE ONLY
R-000265-0158-3	
DRAWING SCALE	
1/4" = 1'-0"	
CITY OF HOUSTON PM	
SHAHIDUR RAHMAN, PE	

E-23

FILE PATH: P:\Projects\0106 - City Of Houston\20031 - White Oak WWTP Phase II\4.0 CAD\4.2 Electrical\E-23 MODIFIED - ANALYZER BUILDING CONTROL PLAN.dwg
PLOT STYLE: ----
PLOTTED: 05/11/2026

PLOTTED: 05/11/2026
PLOT STYLE: ----
FILE PATH: P:\Projects\0106 - City Of Houston\20031 - White Oak WWTP Phase II\4.0 CAD\4.2 Electrical\E-24 MODIFIED - ANALYZER BUILDING LIGHTING PLAN.dwg

ANALYZER BUILDING - LIGHTING SCHEDULE

ITEM	DESCRIPTION	MOUNTING METHOD	LAMP QUANTITY	LAMP TYPE	LUMINAIRE SPECIFICATIONS MANUFACTURER	CATALOG	VOLTS	VA
C	HZL1D LED STRIPLIGHT TEMPERATURE RANGE OF -40'C TO 30'C, DAMP LOCATION LISTED	PENDANT	3	LED 4000K	HOLOPHANE	HZL1D L24 1500LM FST MVOLT 40K 90CRI WH	MVOLT (120-277)	

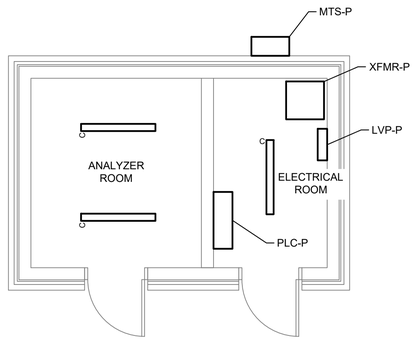

MODIFIED - ANALYZER
BUILDING LIGHTING PLAN

SCALE: 1/4" = 1'-0"

0 2' 4' 8' 12'



NO.	DATE	REVISION	APP.

NOTES BY SYMBOL "⟨#⟩":

1. ELECTRICAL CONTRACTOR SHALL VERIFY SCOPE PRIOR TO STARTING WORK.

MBROH 20 ENGINEERING
11757 KATY FWY,
SUITE 625
HOUSTON, TX 77077
713-468-2545

SURVEYED BY:
FB NO.

THESE DOCUMENTS ARE FOR INTERIM REVIEW AND ARE NOT INTENDED FOR CONSTRUCTION, BIDDING, OR PERMIT PURPOSES.
HANS POURES
TEXAS P.E. NO. 131630
DATE: 11/5/2026

CITY OF HOUSTON
HOUSTON PUBLIC WORKS

WHITE OAKS WWTP IMPROVEMENTS

ELECTRICAL
MODIFIED - ANALYZER
BUILDING LIGHTING PLAN

WBS NUMBER	FOR CITY OF HOUSTON USE ONLY
R-000265-0158-3	
DRAWING SCALE	
1/4" = 1'-0"	
CITY OF HOUSTON PM	
SHAHIDUR RAHMAN, PE	
SHEET NO. 149 OF 189	

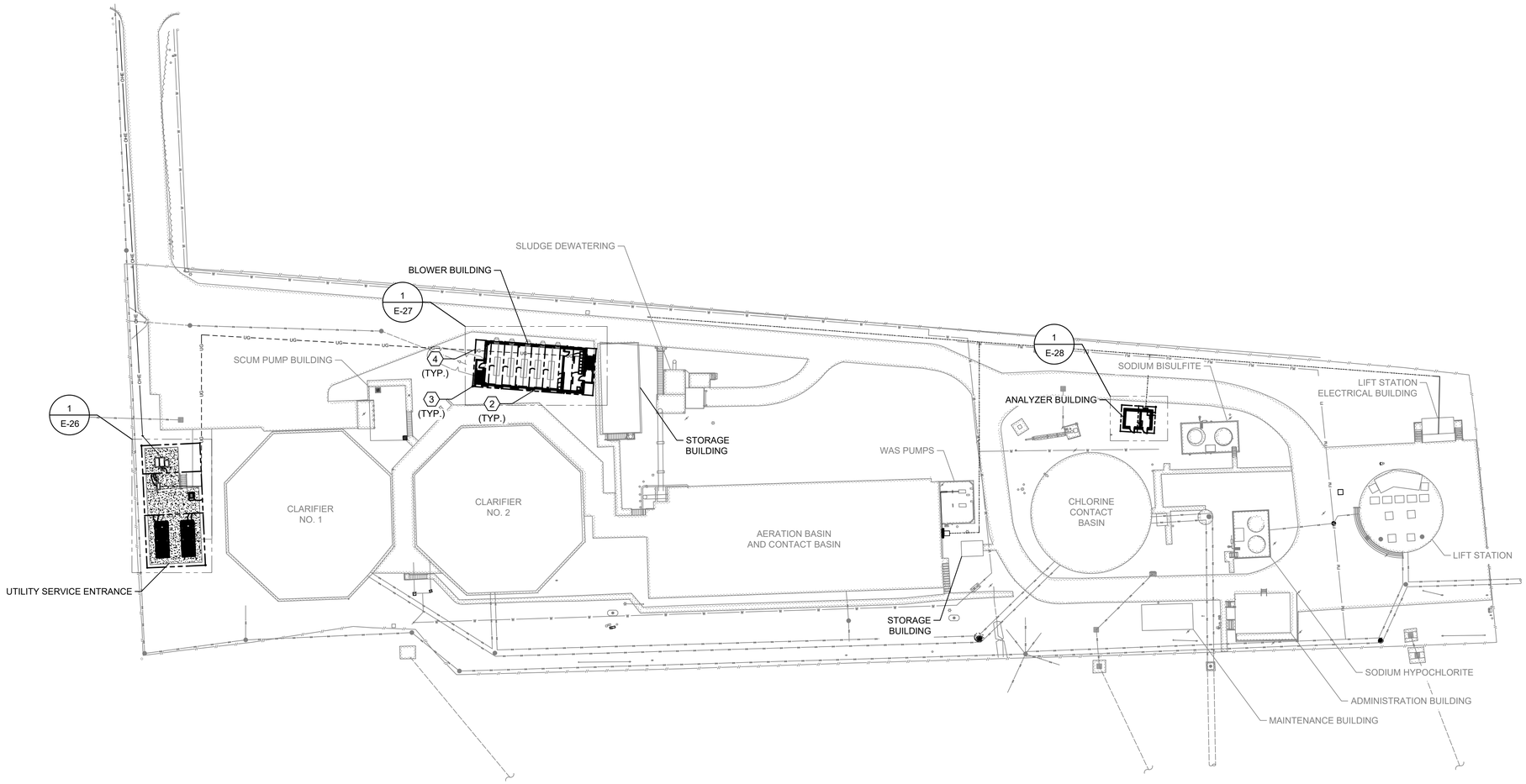

MODIFIED - OVERALL
SITE GROUNDING

SCALE: 1" = 40'

0 20' 40' 80' 120'

NOTES BY SYMBOL "#":

1. ELECTRICAL CONTRACTOR SHALL VERIFY SCOPE PRIOR TO STARTING WORK.
2. 3/4" x 10' COPPER CLAD GROUND ROD.
3. GROUND TEST WELL.
4. GROUND LOOP CONSISTING OF A #4/0 BARE COPPER GROUND WIRE.

LEGEND:

AREA SCOPE BOUNDARY

NO.	DATE	REVISION	APP.

MBROH 20 ENGINEERING
11757 KATY FWY,
SUITE 625
HOUSTON, TX 77077
713-468-2545

SURVEYED BY:
FB NO.

THESE DOCUMENTS ARE FOR INTERIM REVIEW AND ARE NOT INTENDED FOR CONSTRUCTION, BIDDING, OR PERMIT PURPOSES.
HANS POURES
TEXAS P.E. NO. 131630
DATE: 11/5/2026

CITY OF HOUSTON
HOUSTON PUBLIC WORKS

WHITE OAKS WWTP IMPROVEMENTS

ELECTRICAL
MODIFIED - OVERALL SITE GROUNDING

WBS NUMBER	FOR CITY OF HOUSTON USE ONLY
R-000265-0158-3	
DRAWING SCALE	
1" = 40'	
CITY OF HOUSTON PM	
SHAHIDUR RAHMAN, PE	
SHEET NO. 150 OF 189	

E-25

PLOTTED: 05/11/2026
PLOT STYLE: ----
FILE PATH: P:\Projects\0106 - City Of Houston\20031 - White Oak WWTP Phase II\4.0 CAD\4.2 Electrical\E-25 MODIFIED - OVERALL SITE GROUNDING.dwg

PLOTTED: 05/11/2026
PLOT STYLE: ----
FILE PATH: P:\Projects\0106 - City Of Houston\20031 - White Oak WWTP Phase II\4.0 CAD\4.2 Electrical\E-26 MODIFIED - SERVICE ENTRANCE GROUNDING PLAN.dwg

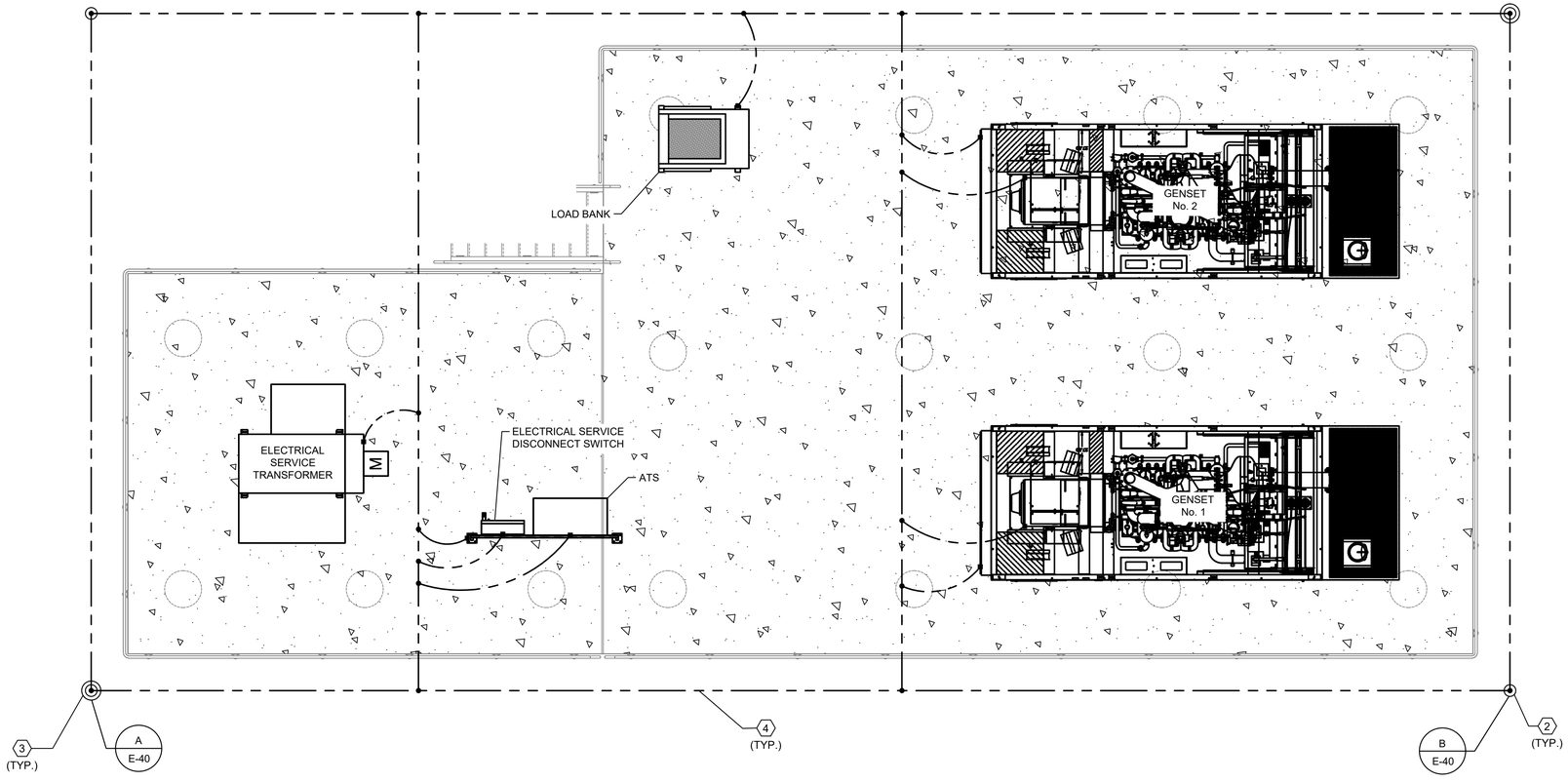

MODIFIED - SERVICE ENTRANCE
GROUNDING PLAN
1
SCALE: 1/4" = 1'-0"

0 2' 4' 8' 12'

NOTES BY SYMBOL " (#) ":

1. ELECTRICAL CONTRACTOR SHALL VERIFY SCOPE PRIOR TO STARTING WORK.
2. 3/4" x 10' COPPER CLAD GROUND ROD.
3. GROUND TEST WELL.
4. GROUND LOOP CONSISTING OF A #4/0 BARE COPPER GROUND WIRE.

NO.	DATE	REVISION	APP.

MBROH ENGINEERING 20
11757 KATY FWY,
SUITE 625
HOUSTON, TX 77077
713-468-2545

SURVEYED BY:
FB NO.

THESE DOCUMENTS ARE FOR INTERIM REVIEW AND ARE NOT INTENDED FOR CONSTRUCTION, BIDDING, OR PERMIT PURPOSES.
HANS POURES
TEXAS P.E. NO. 131630
DATE: 11/5/2026

CITY OF HOUSTON
HOUSTON PUBLIC WORKS

WHITE OAKS WWTP IMPROVEMENTS

ELECTRICAL

MODIFIED - SERVICE ENTRANCE GROUNDING PLAN

WBS NUMBER	FOR CITY OF HOUSTON USE ONLY
R-000265-0158-3	
DRAWING SCALE	
1/4" = 1'-0"	
CITY OF HOUSTON PM	
SHAHIDUR RAHMAN, PE	
SHEET NO. 151 OF 189	

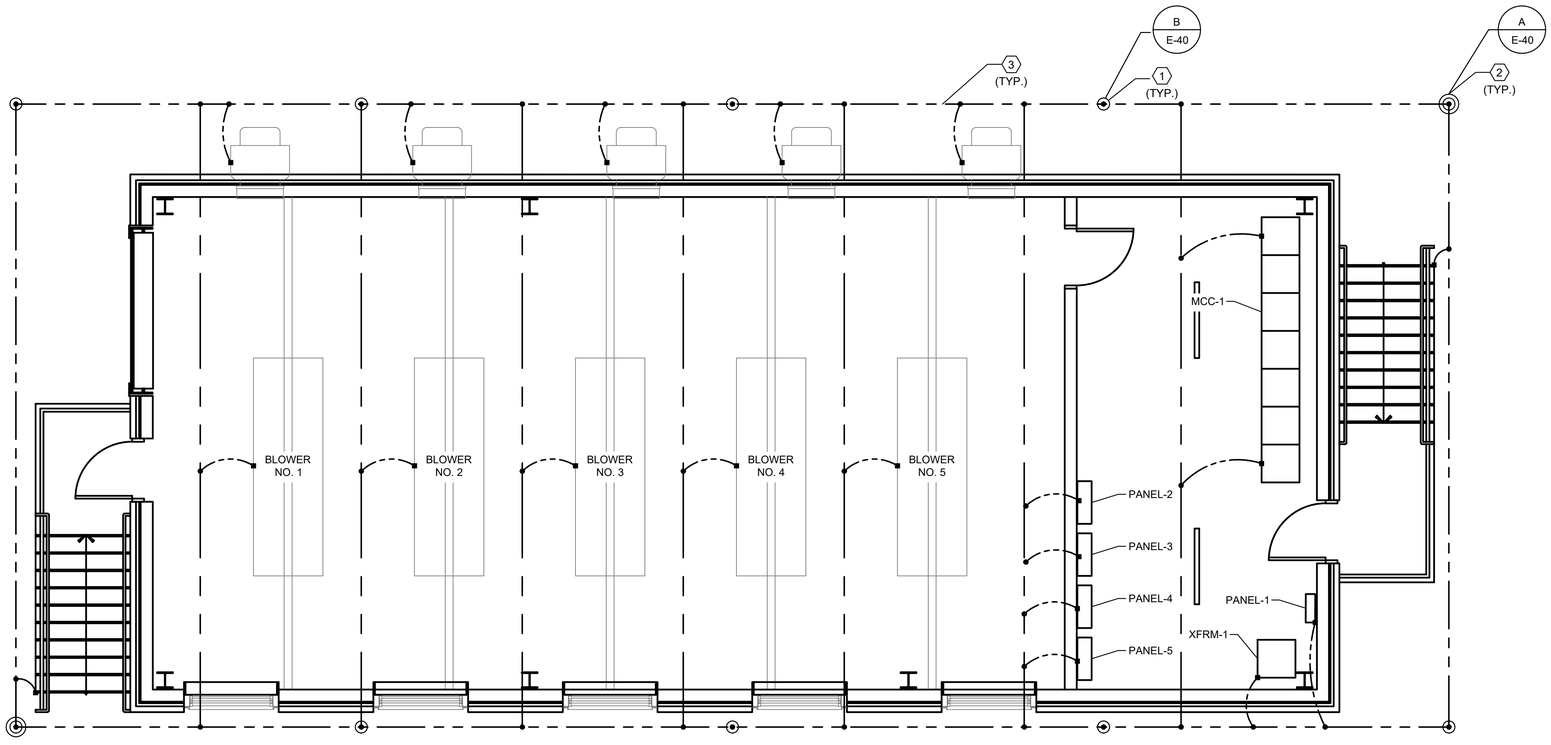

MODIFIED - BLOWER
BUILDING GROUNDING PLAN

SCALE: 1/4" = 1'-0" (1)

0 2' 4' 8' 12'

NOTES BY SYMBOL " (#) ":

1. 3/4" x 10' COPPER CLAD GROUND ROD.
2. GROUND TEST WELL.
3. GROUND LOOP CONSISTING OF A #4/0 BARE COPPER GROUND WIRE.

NO.	DATE	REVISION	APP.

MBROH ENGINEERING
11757 KATY FWY,
SUITE 625
HOUSTON, TX 77077
713-468-2545

SURVEYED BY:
FB NO.

THESE DOCUMENTS ARE FOR INTERIM REVIEW AND ARE NOT INTENDED FOR CONSTRUCTION, BIDDING, OR PERMIT PURPOSES.
HANS POURES
TEXAS P.E. NO. 131630
DATE: 11/5/2026

CITY OF HOUSTON
HOUSTON PUBLIC WORKS

WHITE OAKS WWTP IMPROVEMENTS

ELECTRICAL
MODIFIED - BLOWER
BUILDING GROUNDING PLAN

WBS NUMBER	FOR CITY OF HOUSTON USE ONLY
R-000265-0158-3	
DRAWING SCALE	
1/4" = 1'-0"	
CITY OF HOUSTON PM	
SHAHIDUR RAHMAN, PE	
SHEET NO. 152 OF 189	

E-27

PLOTTED: 05/11/2026
PLOT STYLE: ----
FILE PATH: P:\Projects\0106 - City Of Houston\20031 - White Oak WWTP Phase II\4.0 CAD\4.2 Electrical\E-27 MODIFIED - BLOWER BUILDING GROUNDING PLAN.dwg

FILE PATH: P:\Projects\0106 - City Of Houston\20031 - White Oak WWTP Phase II\4.0 CAD\4.2 Electrical\E-28 MODIFIED - ANALYZER BUILDING GROUNDING PLAN.dwg
PLOT STYLE: ----
PLOTTED: 05/11/2026

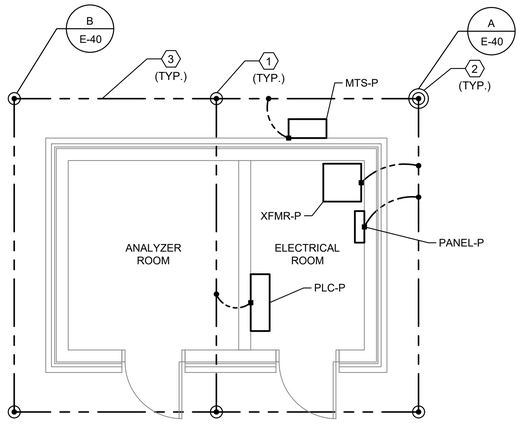

MODIFIED - ANALYZER BUILDING
GROUNDING PLAN

SCALE: 1/4" = 1'-0"

0 2' 4' 8' 12'

NOTES BY SYMBOL " (#) ":

1. 3/4" x 10' COPPER CLAD GROUND ROD.
2. GROUND TEST WELL.
3. GROUND LOOP CONSISTING OF A #4/0 BARE COPPER GROUND WIRE.

NO.	DATE	REVISION	APP.

MBROH ENGINEERING
11757 KATY FWY,
SUITE 625
HOUSTON, TX 77077
713-468-2545

SURVEYED BY:
FB NO.

THESE DOCUMENTS ARE FOR INTERIM REVIEW AND ARE NOT INTENDED FOR CONSTRUCTION, BIDDING, OR PERMIT PURPOSES.
HANS POURES
TEXAS P.E. NO. 131630
DATE: 11/5/2026

CITY OF HOUSTON
HOUSTON PUBLIC WORKS

WHITE OAKS WWTP IMPROVEMENTS

ELECTRICAL

MODIFIED - ANALYZER BUILDING GROUNDING PLAN

WBS NUMBER	FOR CITY OF HOUSTON USE ONLY
R-000265-0158-3	
DRAWING SCALE	
1/4" = 1'-0"	
CITY OF HOUSTON PM	
SHAHIDUR RAHMAN, PE	
SHEET NO. 153 OF 189	

E-28

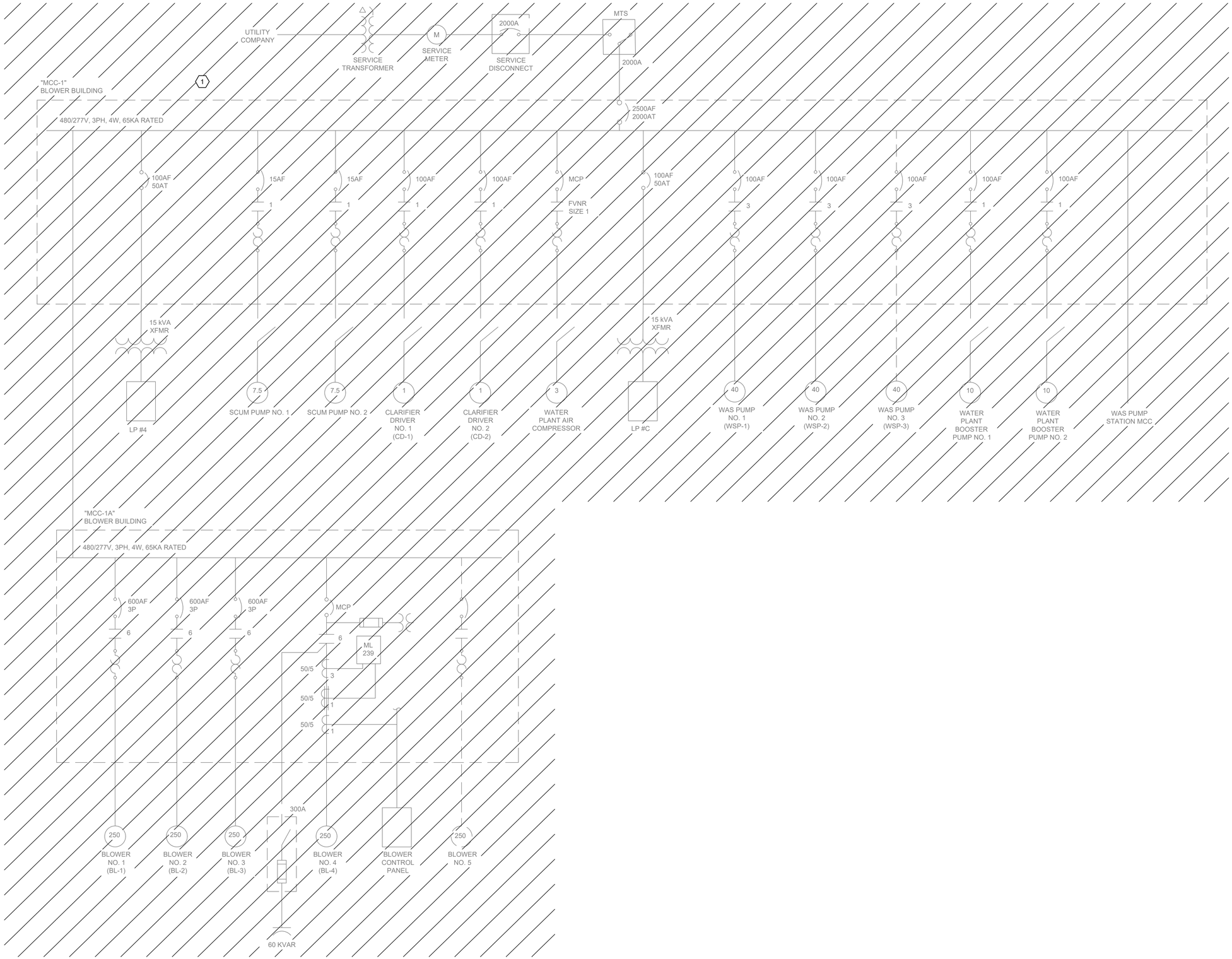

NOTES BY SYMBOL "(#)":

1. THE CONTRACTOR SHALL DEMOLISH EXISTING MOTOR CONTROL CENTER "MCC-1" & "MCC-1A" IN THEIR ENTIRETY. THE CONTRACTOR SHALL PROVIDE EVERY METHOD OF PROTECTING THE BREAKERED LOADS CONDUCTORS AND ITS ASSOCIATED CONDUIT RUNS DURING THE DEMOLISHING OF THE MOTOR CONTROL CENTER "MCC-1" & "MCC-1A".

LEGEND:

DEMOLITION SCOPE

NO.	DATE	REVISION	APP.

MBROH ENGINEERING
11757 KATY FWY,
SUITE 625
HOUSTON, TX 77077
713-468-2545

SURVEYED BY:

FB NO.

THESE DOCUMENTS ARE FOR INTERIM REVIEW AND ARE NOT INTENDED FOR CONSTRUCTION, BIDDING, OR PERMIT PURPOSES.

HANS POURES

TEXAS P.E. NO. 131630

DATE: 11/5/2026

CITY OF HOUSTON

HOUSTON PUBLIC WORKS

WHITE OAKS WWTP IMPROVEMENTS

ELECTRICAL

DEMOLITION - ONE-LINE MCC-1 & MCC-1A

WBS NUMBER	FOR CITY OF HOUSTON USE ONLY
R-000265-0158-3	
DRAWING SCALE	
NONE	
CITY OF HOUSTON PM	
SHAHIDUR RAHMAN, PE	

PLOTTED: 05/11/2026

PLOT STYLE: ----

FILE PATH: P:\Projects\0106 - City Of Houston\20031 - White Oak WWTP Phase II\4.0 CAD\4.2 Electrical\E-29 DEMOLITION - ONE-LINE MCC-1 & MCC-1A.dwg

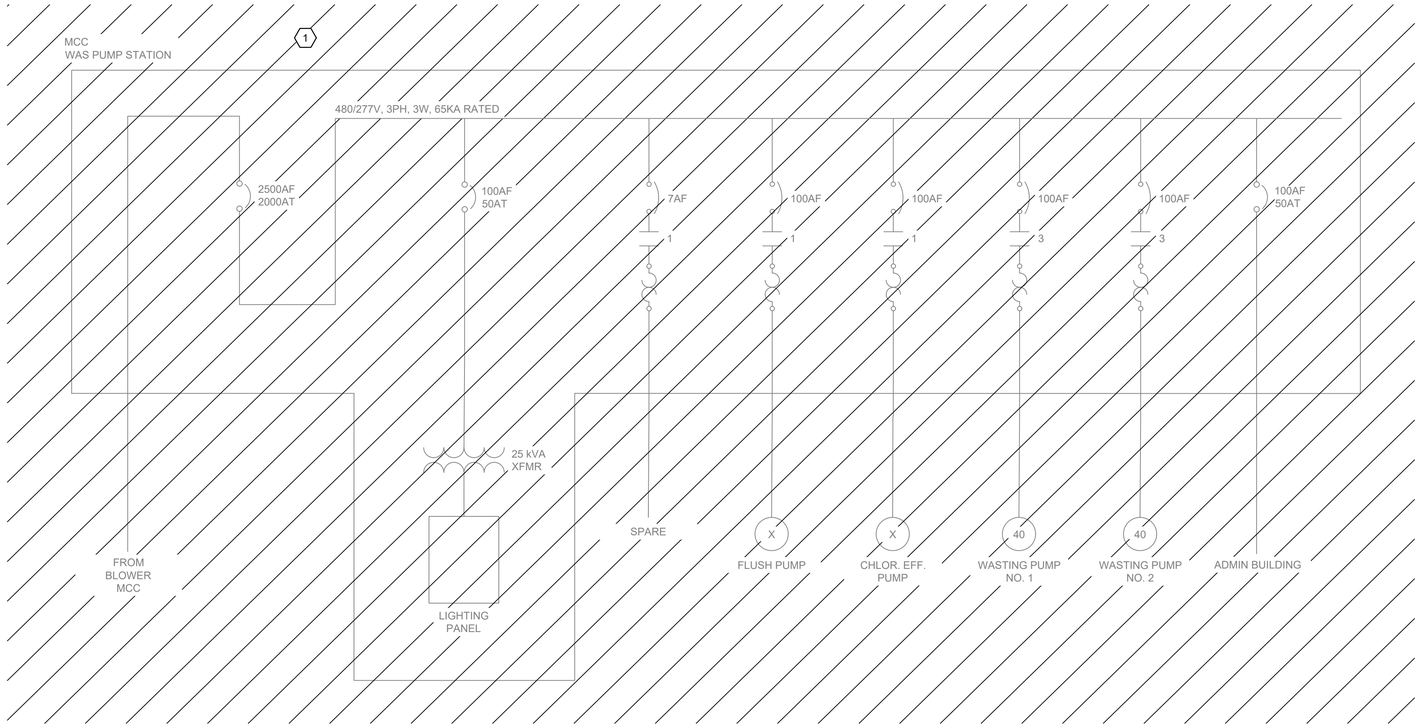

NOTES BY SYMBOL "⬡ # ":

1. THE CONTRACTOR SHALL DEMOLISH EXISTING MOTOR CONTROL CENTER "MCC-2" IN ITS ENTIRETY. THE CONTRACTOR SHALL PROVIDE EVERY METHOD OF PROTECTING THE BREAKERED LOADS CONDUCTORS AND ITS ASSOCIATED CONDUIT RUNS DURING THE DEMOLISHING OF THE MOTOR CONTROL CENTER "MCC-2".

LEGEND:

DEMOLITION SCOPE

NO.	DATE	REVISION	APP.

MBROH 20 ENGINEERING
11757 KATY FWY,
SUITE 625
HOUSTON, TX 77077
713-468-2545

SURVEYED BY:
FB NO.

THESE DOCUMENTS ARE FOR INTERIM REVIEW AND ARE NOT INTENDED FOR CONSTRUCTION, BIDDING, OR PERMIT PURPOSES.
HANS POURES
TEXAS P.E. NO. 131630
DATE: 11/5/2026

CITY OF HOUSTON
HOUSTON PUBLIC WORKS

WHITE OAKS WWTP IMPROVEMENTS

ELECTRICAL
DEMOLITION - ONE-LINE
MCC-2

WBS NUMBER	FOR CITY OF HOUSTON USE ONLY
R-000265-0158-3	
DRAWING SCALE	
NONE	
CITY OF HOUSTON PM	
SHAHIDUR RAHMAN, PE	

PLOTTED: 05/11/2026
PLOT STYLE: ----
FILE PATH: P:\Projects\0106 - City Of Houston\20031 - White Oak WWTP Phase II\4.0 CAD\4.2 Electrical\E-30 DEMOLITION - ONE-LINE MCC-2.dwg

PLOTTED: 05/11/2026
PLOT STYLE: ----
FILE PATH: P:\Projects\0106 - City Of Houston\20031 - White Oak WWTP Phase II\4.0 CAD\4.2 Electrical\E-31 DEMOLITION - ONE-LINE MCC-3.dwg

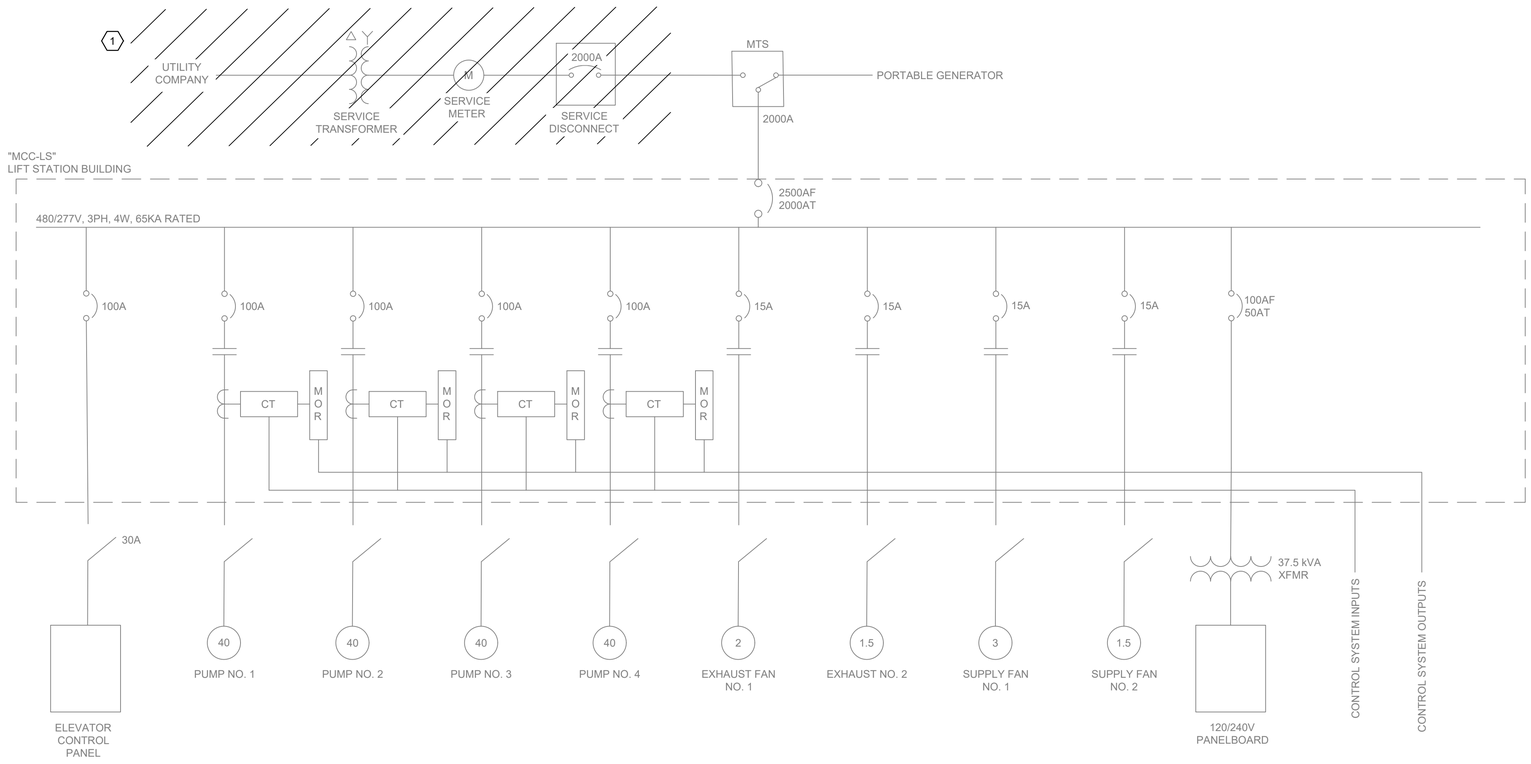

NO.	DATE	REVISION	APP.

NOTES BY SYMBOL "⬡ #":

1. THE CONTRACTOR SHALL DEMOLISH ONLY THE EXISTING MOTOR CONTROL CENTER "MCC-3" COMPONENTS AND ASSOCIATED WIRING IDENTIFIED FOR REMOVAL. THE CONTRACTOR SHALL PROTECT ALL EXISTING CONDUCTORS, CONDUIT RUNS, AND EQUIPMENT TO REMAIN DURING DEMOLITION. COORDINATE DEMOLITION WITH THE ELECTRICAL DRAWINGS AND MAINTAIN POWER TO EQUIPMENT DESIGNATED TO REMAIN.

LEGEND:

DEMOLITION SCOPE

MBROH 20 ENGINEERING
11757 KATY FWY,
SUITE 625
HOUSTON, TX 77077
713-468-2545

SURVEYED BY:
FB NO.

THESE DOCUMENTS ARE FOR INTERIM REVIEW AND ARE NOT INTENDED FOR CONSTRUCTION, BIDDING, OR PERMIT PURPOSES.
HANS POURES
TEXAS P.E. NO. 131630
DATE: 11/5/2026

CITY OF HOUSTON
HOUSTON PUBLIC WORKS

WHITE OAKS WWTP IMPROVEMENTS

ELECTRICAL
DEMOLITION - ONE-LINE
MCC-3

WBS NUMBER	FOR CITY OF HOUSTON USE ONLY
R-000265-0158-3	
DRAWING SCALE	
NONE	
CITY OF HOUSTON PM	
SHAHIDUR RAHMAN, PE	
SHEET NO. 156 OF 189	

PLOTTED: 06/11/2026
PLOT STYLE: ----
FILE PATH: P:\Projects\0106 - City Of Houston\20031 - White Oak WWTP Phase II\4.0 CAD\4.2 Electrical\E-32 DEMOLITION - ONE-LINE MCC-4.dwg

NO.	DATE	REVISION	APP.

NOTES BY SYMBOL "⬡ # ":

1. THE CONTRACTOR SHALL DEMOLISH ONLY THE EXISTING MOTOR CONTROL CENTER "MCC-3" COMPONENTS AND ASSOCIATED WIRING IDENTIFIED FOR REMOVAL. THE CONTRACTOR SHALL PROTECT ALL EXISTING CONDUCTORS, CONDUIT RUNS, AND EQUIPMENT TO REMAIN DURING DEMOLITION. COORDINATE DEMOLITION WITH THE ELECTRICAL DRAWINGS AND MAINTAIN POWER TO EQUIPMENT DESIGNATED TO REMAIN.

LEGEND:

DEMOLITION SCOPE

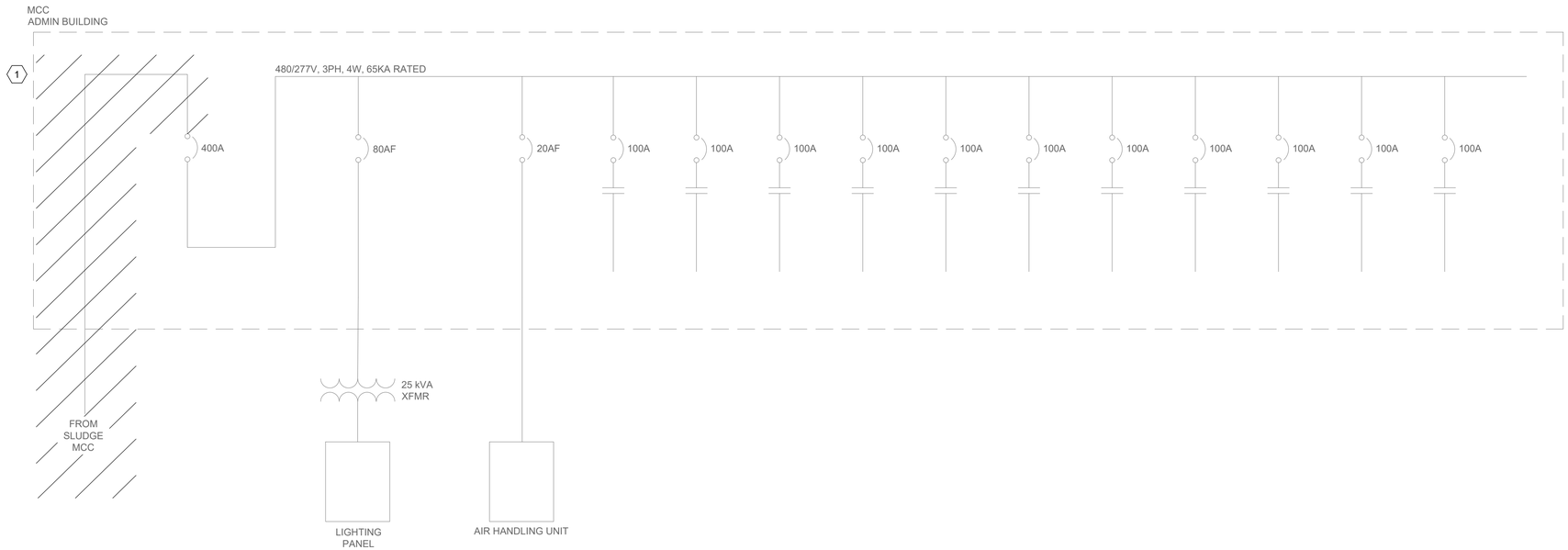

MBROH 20
ENGINEERING
11757 KATY FWY,
SUITE 625
HOUSTON, TX 77077
713-468-2545

SURVEYED BY:
FB NO.

THESE DOCUMENTS ARE FOR INTERIM REVIEW AND ARE NOT INTENDED FOR CONSTRUCTION, BIDDING, OR PERMIT PURPOSES.
HANS POURES
TEXAS P.E. NO. 131630
DATE: 11/5/2026

CITY OF HOUSTON
HOUSTON PUBLIC WORKS

WHITE OAKS WWTP IMPROVEMENTS

ELECTRICAL
DEMOLITION - ONE-LINE
MCC-4

WBS NUMBER	FOR CITY OF HOUSTON USE ONLY
R-000265-0158-3	
DRAWING SCALE	
NONE	
CITY OF HOUSTON PM	
SHAHIDUR RAHMAN, PE	

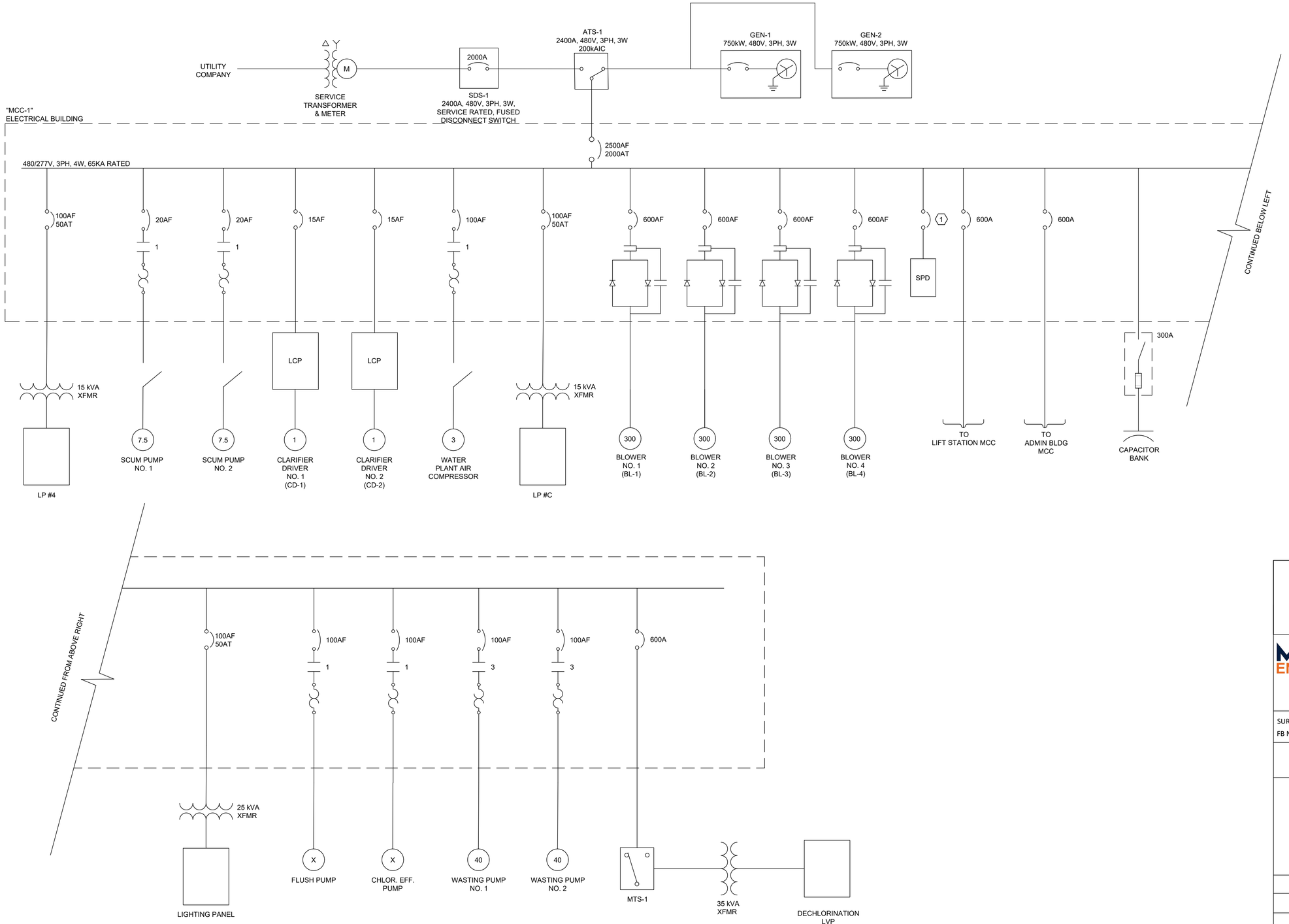

NOTES BY SYMBOL "⬡ (#)":

1. SPD BREAKER TO BE SIZED BY THE EQUIPMENT MANUFACTURER

GENERAL NOTES:

1. REFER TO THE ELECTRICAL DEMOLITION DRAWINGS FOR THE REMOVAL OF EXISTING MOTOR CONTROL CENTER "MCC-1" AND ITS ASSOCIATED ELECTRICAL CONNECTIONS.
2. VERIFY EXISTING FIELD CONDITIONS, INCLUDING EQUIPMENT LOCATIONS, CONDUIT ROUTING, AND ELECTRICAL CONNECTIONS, PRIOR TO COMMENCING WORK.
3. DISCONNECT AND REMOVE EXISTING CONDUCTORS AND ASSOCIATED CONDUITS MADE OBSOLETE BY THE REMOVAL OF MCC-1, UNLESS OTHERWISE INDICATED.
4. PROTECT EXISTING EQUIPMENT, CONDUCTORS, AND CONDUIT RUNS DESIGNATED TO REMAIN DURING DEMOLITION AND MODIFICATION WORK.
5. COORDINATE ALL ELECTRICAL MODIFICATIONS WITH THE ASSOCIATED EQUIPMENT AND CONTROL REQUIREMENTS SHOWN ON THE CONTRACT DRAWINGS.
6. COORDINATE REQUIRED POWER INTERRUPTIONS WITH THE OWNER PRIOR TO COMMENCING WORK.
7. IDENTIFY AND PROPERLY TERMINATE ALL EXISTING CONDUCTORS AFFECTED BY THE MODIFICATIONS THAT ARE TO REMAIN IN SERVICE.
8. ALL NEW OR MODIFIED ELECTRICAL CONNECTIONS SHALL COMPLY WITH THE CONTRACT DOCUMENTS AND APPLICABLE ELECTRICAL CODES.

NO.	DATE	REVISION	APP.

MBROH ENGINEERING
11757 KATY FWY,
SUITE 625
HOUSTON, TX 77077
713-468-2545

SURVEYED BY:

FB NO.

THESE DOCUMENTS ARE FOR INTERIM REVIEW AND ARE NOT INTENDED FOR CONSTRUCTION, BIDDING, OR PERMIT PURPOSES.

HANS POURES

TEXAS P.E. NO. 131630

DATE: 11/5/2026

CITY OF HOUSTON
HOUSTON PUBLIC WORKS

WHITE OAKS WWTP IMPROVEMENTS

ELECTRICAL

MODIFIED - ONE-LINE MCC-1

WBS NUMBER	FOR CITY OF HOUSTON USE ONLY
R-000265-0158-3	
DRAWING SCALE	
NONE	
CITY OF HOUSTON PM	
SHAHIDUR RAHMAN, PE	
E-33	SHEET NO. 158 OF 189

PLOTTED: 05/11/2026
PLOT STYLE: ----
FILE PATH: P:\Projects\0106 - City Of Houston\20031 - White Oak WWTP Phase II\4.0 CAD\4.2 Electrical\E-33 MODIFIED - ONE-LINE MCC-1.dwg

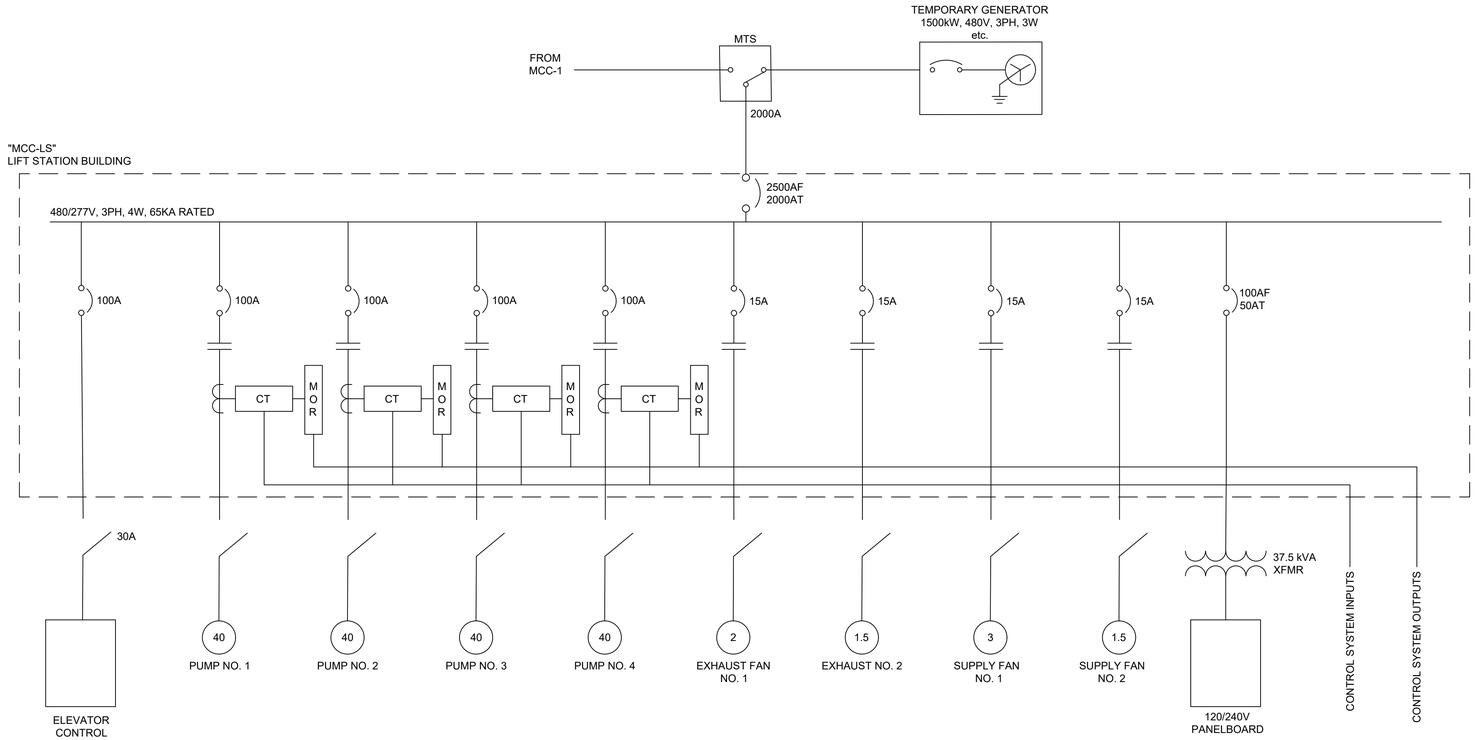

NOTES BY SYMBOL "⬡ # ":

1. CONTRACTOR SHALL

GENERAL NOTES:

1. REFER TO THE ELECTRICAL DEMOLITION DRAWINGS FOR THE REMOVAL OF EXISTING MOTOR CONTROL CENTER "MCC-1" AND ITS ASSOCIATED ELECTRICAL CONNECTIONS.
2. VERIFY EXISTING FIELD CONDITIONS, INCLUDING EQUIPMENT LOCATIONS, CONDUIT ROUTING, AND ELECTRICAL CONNECTIONS, PRIOR TO COMMENCING WORK.
3. DISCONNECT AND REMOVE EXISTING CONDUCTORS AND ASSOCIATED CONDUITS MADE OBSOLETE BY THE REMOVAL OF MCC-1, UNLESS OTHERWISE INDICATED.
4. PROTECT EXISTING EQUIPMENT, CONDUCTORS, AND CONDUIT RUNS DESIGNATED TO REMAIN DURING DEMOLITION AND MODIFICATION WORK.
5. COORDINATE ALL ELECTRICAL MODIFICATIONS WITH THE ASSOCIATED EQUIPMENT AND CONTROL REQUIREMENTS SHOWN ON THE CONTRACT DRAWINGS.
6. COORDINATE REQUIRED POWER INTERRUPTIONS WITH THE OWNER PRIOR TO COMMENCING WORK.
7. IDENTIFY AND PROPERLY TERMINATE ALL EXISTING CONDUCTORS AFFECTED BY THE MODIFICATIONS THAT ARE TO REMAIN IN SERVICE.
8. ALL NEW OR MODIFIED ELECTRICAL CONNECTIONS SHALL COMPLY WITH THE CONTRACT DOCUMENTS AND APPLICABLE ELECTRICAL CODES.

NO.	DATE	REVISION	APP.

MBROH 20 ENGINEERING
11757 KATY FWY,
SUITE 625
HOUSTON, TX 77077
713-468-2545

SURVEYED BY:
FB NO.

THESE DOCUMENTS ARE FOR INTERIM REVIEW AND ARE NOT INTENDED FOR CONSTRUCTION, BIDDING, OR PERMIT PURPOSES.
HANS POURES
TEXAS P.E. NO. 131630
DATE: 11/5/2026

CITY OF HOUSTON
HOUSTON PUBLIC WORKS

WHITE OAKS WWTP IMPROVEMENTS

ELECTRICAL

MODIFIED - ONE-LINE MCC-2

WBS NUMBER	FOR CITY OF HOUSTON USE ONLY
R-000265-0158-3	
DRAWING SCALE	
NONE	
CITY OF HOUSTON PM	
SHAHIDUR RAHMAN, PE	

E-34 SHEET NO. 159 OF 189

PLOTTED: 05/11/2026
PLOT STYLE: ----
FILE PATH: P:\Projects\0106 - City Of Houston\20031 - White Oak WWTP Phase II\4.0 CAD\4.2 Electrical\E-34 MODIFIED - ONE-LINE MCC-2.dwg

PLOTTED: 06/11/2026
PLOT STYLE: ----
FILE PATH: P:\Projects\0106 - City Of Houston\20031 - White Oak Wwtp Phase ii\4.0 Cad\4.2 Electrical\E-35 MODIFIED - ONE-LINE MCC-3.dwg

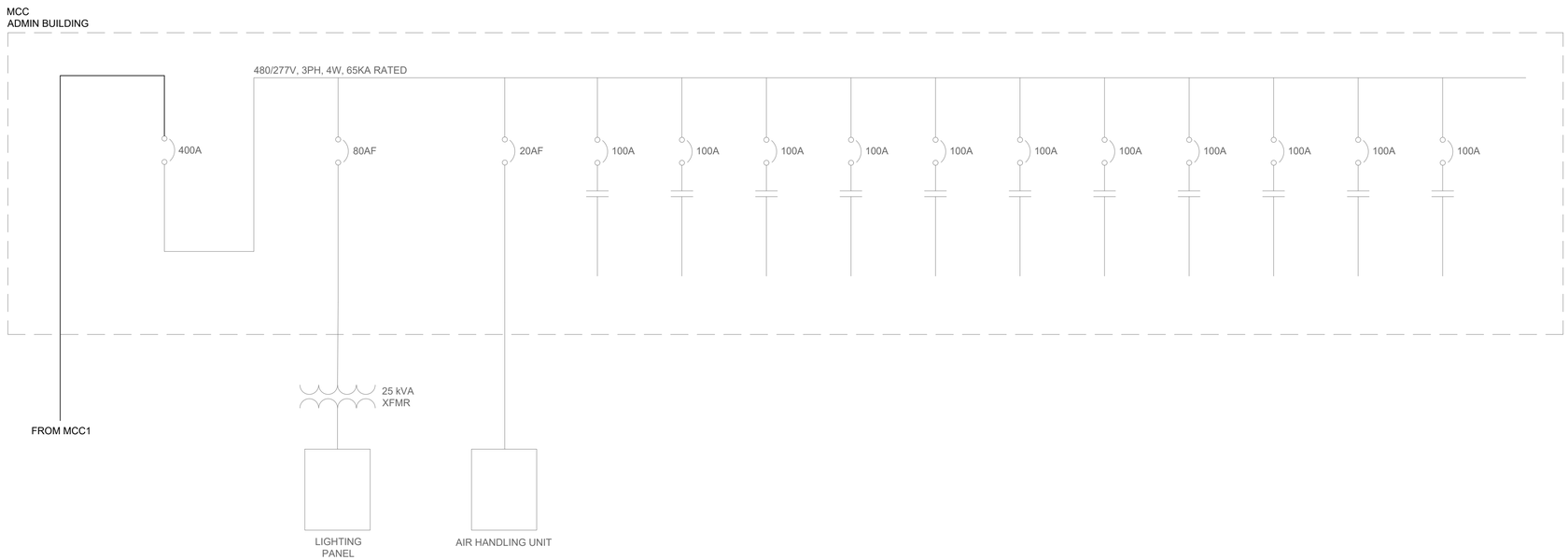

NOTES BY SYMBOL "⟨#⟩":

1. CONTRACTOR SHALL

GENERAL NOTES:

1. VERIFY EXISTING FIELD CONDITIONS, EQUIPMENT LOCATIONS, CONDUIT ROUTING, AND ELECTRICAL CONNECTIONS PRIOR TO COMMENCING WORK. REPORT DISCREPANCIES TO THE ENGINEER.
2. PROTECT EXISTING EQUIPMENT, CONDUCTORS, AND CONDUIT RUNS DESIGNATED TO REMAIN DURING DEMOLITION AND MODIFICATION WORK.
3. MAINTAIN EXISTING POWER AND CONTROL CONNECTIONS TO EQUIPMENT DESIGNATED TO REMAIN, EXCEPT AS REQUIRED FOR APPROVED MODIFICATIONS.
4. COORDINATE MODIFICATIONS TO THE EXISTING SERVICE DISCONNECT, TRANSFER SWITCH, AND PORTABLE GENERATOR CONNECTION WITH THE CONTRACT DOCUMENTS AND EQUIPMENT MANUFACTURER REQUIREMENTS.
5. VERIFY THAT ALL FEEDER AND BRANCH CIRCUIT CONNECTIONS TO THE ELEVATOR CONTROL PANEL, PUMPS, EXHAUST FANS, SUPPLY FANS, AND PANELBOARD ARE INSTALLED AS SHOWN ON THE DRAWINGS.
6. COORDINATE REQUIRED POWER INTERRUPTIONS AND EQUIPMENT SHUTDOWNS WITH THE OWNER PRIOR TO COMMENCING WORK.
7. IDENTIFY AND PROPERLY TERMINATE CONDUCTORS AFFECTED BY THE MODIFICATIONS THAT ARE TO REMAIN IN SERVICE. REMOVE OR ABANDON UNUSED CONDUCTORS AND CONDUITS IN ACCORDANCE WITH THE CONTRACT DOCUMENTS.
8. TEST AND VERIFY ALL NEW AND MODIFIED ELECTRICAL CONNECTIONS BEFORE PLACING THE AFFECTED EQUIPMENT INTO SERVICE.

NO.	DATE	REVISION	APP.

MBROH ENGINEERING 20
11757 KATY FWY,
SUITE 625
HOUSTON, TX 77077
713-468-2545

SURVEYED BY:
FB NO.

THESE DOCUMENTS ARE FOR INTERIM REVIEW AND ARE NOT INTENDED FOR CONSTRUCTION, BIDDING, OR PERMIT PURPOSES.
HANS POURES
TEXAS P.E. NO. 131630
DATE: 11/5/2026

CITY OF HOUSTON
HOUSTON PUBLIC WORKS

WHITE OAKS WWTP IMPROVEMENTS

ELECTRICAL
MODIFIED - ONE-LINE
MCC-3

WBS NUMBER	FOR CITY OF HOUSTON USE ONLY
R-000265-0158-3	
DRAWING SCALE	
NONE	
CITY OF HOUSTON PM	
SHAHIDUR RAHMAN, PE	

TO	VOLTAGE	CONDUIT SIZE INCH	CABLE SIZE & TYPE	NOTES
SERVICE TRANSFORMER	XX	6	18#350KCMIL, 250KCMILGND	
FUSED DISCONNECT	480	6	18#350KCMIL, 250KCMILGND	
METER	480	6	18#350KCMIL, 250KCMILGND	
ATS	480	6	18#350KCMIL, 250KCMILGND	
ATS	480	6	18#350KCMIL, 250KCMILGND	
MCC-1	480/277	6	18#350KCMIL, 250KCMILGND	
LP#1 XFMR	480/277	1	#10 AWG, #8 GND	
LP#1	480/277	1	#10 AWG, #8 GND	
LP#2 XFMR	480/277	1	#10 AWG, #8 GND	
LP#2	480/277	1	#10 AWG, #8 GND	
SCUM PUMP NO.1	480/277	1	#14 AWG, #8 GND	
SCUM PUMP NO.2	480/277	1	#14 AWG, #8 GND	
LCP-1	480/277	1	#10AWG, #8GND	
CD-1	480/277	1	#10AWG, #8GND	
LP#3 XFMR	480/277	1	#10 AWG, #8 GND	
LP#3	480/277	1	#10 AWG, #8 GND	
LCP-2	480/277	1	#10AWG, #8GND	
CD-2	480/277	1	#10AWG, #8GND	
WATER PLANT AIR COMPRESSOR	480/277	1	#14 AWG, #8 GND	
RVSS #1 W/BYPASS	480/277	2	9#250KCMIL, #4GND	
BLOWER NO.1	480/277	2	9#250KCMIL, #4GND	
RVSS #2 W/BYPASS	480/277	2	9#250KCMIL, #4GND	
BLOWER NO.2	480/277	2	9#250KCMIL, #4GND	
RVSS #3 W/BYPASS	480/277	2	9#250KCMIL, #4GND	
BLOWER NO.3	480/277	2	9#250KCMIL, #4GND	
RVSS #4 W/BYPASS	480/277	2	9#250KCMIL, #4GND	
BLOWER NO.4	480/277	2	9#250KCMIL, #4GND	
SPD	480/277	X	XXX	
MCC-LS	480/277	6	21#350KCMIL, 250KCMIL GND	
CAPACITOR BANK	480/277	X	XXX	
EXISTING LIFT STATION MCC	480/277	2 1/2	#500KCMIL, #3 GND	
FLUSH PUMP	480/277	1	#14 AWG, #8 GND	
CHLORINE EFFLUENT PUMP	480/277	1	#14 AWG, #8 GND	
WASTING PUMP NO.1	480/277	1	#8 AWG, #8 GND	
WASTING PUMP NO.2	480/277	1	#8 AWG, #8 GND	
WASTING PUMP NO.3	480/277	1	#8 AWG, #8 GND	
MANUAL TRANSFER SWITCH 1	480/277	1	#4 AWG, #8 GND	
XFMR-A	480/277	1	#10AWG, #8GND	
ANALYZER LP	240/120	1	#10AWG, #8GND	

NO.	DATE	REVISION	APP.

MBROH 20 ENGINEERING
11757 KATY FWY,
SUITE 625
HOUSTON, TX 77077
713-468-2545

SURVEYED BY:
FB NO.

THESE DOCUMENTS ARE FOR INTERIM REVIEW AND ARE NOT INTENDED FOR CONSTRUCTION, BIDDING, OR PERMIT PURPOSES.
HANS POURES
TEXAS P.E. NO. 131630
DATE: 10/19/2026

CITY OF HOUSTON
HOUSTON PUBLIC WORKS

WHITE OAKS WWTP IMPROVEMENTS

ELECTRICAL

MODIFIED - CONDUIT SCHEDULE

WBS NUMBER	FOR CITY OF HOUSTON USE ONLY
R-000265-0158-3	
DRAWING SCALE	
NONE	
CITY OF HOUSTON PM	
SHAHIDUR RAHMAN, PE	

PLOTTED: 05/11/2026
PLOT STYLE: ----
FILE PATH: P:\Projects\0106 - City Of Houston\20031 - White Oak WWTP Phase II\4.0 CAD\4.2 Electrical\E-36 MODIFIED - CONDUIT SCHEDULE.dwg

PANEL NAME: LP-LS
SERVICE VOLTAGE: 120/240 VAC
SC: 10KAIC

LOCATION: LIFT STATION
PHASE: 3 WIRE: 3
BUS SIZE: 150A MAIN BREAKER SIZE: 150A
NEUTRAL: FULL

LOAD IN AMPS A	LOAD IN AMPS B	LOAD IN AMPS C	CIRCUIT DESCRIPTION	BKR A/P	CKT NO.	CKT NO.	BKR A/P	CIRCUIT DESCRIPTION	LOAD IN AMPS A	LOAD IN AMPS B	LOAD IN AMPS C
48			LIFT STATION MCC ROOM AC	60/1	1	2	20/1	SPARE	0		
	48		LIFT STATION MCC ROOM AC		3	4	20/1	SPARE		0	
		0	SPARE	20/1	5	6	20/1	SURGE PROTECTOR CTRL. PANEL			15
0			SPARE	20/1	7	8	20/1	CONTROL PANEL GFI RECEPT.	15		
	15		EMERGENCY LIGHT MCC RM.	20/1	9	10	20/1	CONTROL PANEL SPARE		15	
		15	MCC ROOM LIGHTING	20/1	11	12	20/1	CONTROL PANEL HEATER			15
15			MCC ROOM RECEPT. N. WALL	20/1	13	14	20/1	CONTROL PANEL SPARE	15		
	15		OUTSIDE BUILDING LIGHTS	20/1	15	16	20/1	LIFT STATION EXIT LIGHTING		15	
		15	UPS POWER	20/1	17	18	20/1	LIFT STATION EMERG LIGHTING			15
0			SPARE	20/1	19	20	20/1	MOTOR ROOM LIGHTING	15		
	15		EAST WALL RECEPTACLE	20/1	21	22	20/1	LIFT STATION STAIR LIGHTING		15	
		15	FIRE PROTECTION PANEL	20/1	23	24	20/1	ELEVATOR LIGHTING			15
15			AC RECEPTACLE	20/1	25	26	20/1	ELEVATOR CONTROL PANEL	15		
	15		PUMP ROOM LIGHTING	20/1	27	28	20/1	LIFT STATION SUMP PUMP #1		15	
				20/1	29	30	20/1	LIFT STATION SUMP PUMP #2			15
				20/1	31	32	20/1	POLE LT OUT BID	15		
				20/1	33	34	20/1				
				20/1	35	36	20/1				
				20/1	37	38	20/1				
				20/1	39	40	20/1				
				20/1	41	42	20/1				
78	108	45	TOTALS						75	60	75

PANEL NAME: LP-P
SERVICE VOLTAGE: 128/240 VAC
SC: 10KAIC

LOCATION: DISINFECTION BUILDING
PHASE: 1 WIRE: 3
BUS SIZE: 100A MAIN BREAKER SIZE: 100A
NEUTRAL: FULL

LOAD IN KVA A	LOAD IN KVA B	LOAD IN KVA C	CIRCUIT DESCRIPTION	BKR A/P	CKT NO.	CKT NO.	BKR A/P	CIRCUIT DESCRIPTION	LOAD IN KVA A	LOAD IN KVA B	LOAD IN KVA C
15			PLC	20/1	1	2	20/1		0		
	15		A/C	20/1	3	4	20/1			0	
		0		20/1	5	6	20/1				0
0				30/1	7	8	20/1	HEAT TRACER	15		
	0				9	10	20/1	HEAT TRACER		15	
		0		20/1	11	12	20/1				0
15			MIX PUMP	30/1	13	14	20/1	BLCH #1	15		
	15		PRE	30/1	15	16	20/1	BLCH #2		15	
		15	POST	30/1	17	18	20/1				0
15			I O	30/1	19	20	20/1				
	80		MAIN BREAKER	100/1	21	22	20/1				
		80			23	24	20/1				
				20/1	25	26	20/1				
				20/1	27	28	20/1				
				20/1	29	30	20/1				
				20/1	31	32	20/1				
				20/1	33	34	20/1				
				20/1	35	36	20/1				
				20/1	37	38	20/1				
				20/1	39	40	20/1				
				20/1	41	42	20/1				
45	110	95	TOTALS						30	30	0

PANEL NAME: LP-OLS
SERVICE VOLTAGE: 120 VAC
SC: 10KAIC

LOCATION: OLD LIFT STATION
PHASE: 3 WIRE: 4
BUS SIZE: 100A MAIN BREAKER SIZE: 100A
NEUTRAL: FULL

LOAD IN KVA A	LOAD IN KVA B	LOAD IN KVA C	CIRCUIT DESCRIPTION	BKR A/P	CKT NO.	CKT NO.	BKR A/P	CIRCUIT DESCRIPTION	LOAD IN KVA A	LOAD IN KVA B	LOAD IN KVA C
80			MAIN	100/1	1	2	20/1	MCC HTR	20		
	80				3	4	20/1	ELEVATOR SUMP		20	
		15	WTR HTR	20/1	5	6	20/1	AIR COND			20
15			WTR HTR	20/1	7	8	20/1	AIR COND	20		
	15		EL EM LTG	20/1	9	10	20/1	CTRL CAB		15	
		15	OFF LTG	20/1	11	12	20/1	F ALM CAB			15
15			OFF RECPT	20/1	13	14	20/1		0		
	15		ROUTER	20/1	15	16	20/1			0	
		15	REFRIG	20/1	17	18	20/1	EMG LTG			15
15			YARD LT	20/1	19	20	20/1		0		
	15		RESTROOM	20/1	21	22	20/1			0	
		15	AIR COMP	20/1	23	24	20/1				0
				20/1	25	26	20/1		0		
				20/1	27	28	20/1	SPARE		0	
				20/1	29	30	20/1	A/C COMP			15
				20/1	31	32	20/1	A/C COMP	15		
				20/1	33	34	20/1				
				20/1	35	36	20/1				
				20/1	37	38	20/1				
				20/1	39	40	20/1				
				20/1	41	42	20/1				
125	125	60	TOTALS						55	35	65

PANEL NAME: LP-SB
SERVICE VOLTAGE: 120/240 VAC
SC: 10KAIC

LOCATION: SLUDGE BUILDING
PHASE: 1 WIRE: 4
BUS SIZE: 100A MAIN BREAKER SIZE: 100A
NEUTRAL: FULL

LOAD IN KVA A	LOAD IN KVA B	LOAD IN KVA C	CIRCUIT DESCRIPTION	BKR A/P	CKT NO.	CKT NO.	BKR A/P	CIRCUIT DESCRIPTION	LOAD IN KVA A	LOAD IN KVA B	LOAD IN KVA C
15			LIGHT	20/1	1	2	20/1	RECEPTACLES	15		
	15		OUTER LIGHTS	20/1	3	4	20/1	OUT. RECEPTACLE		15	
		15	AC	20/1	5	6	20/1	C. PNL. LIGHTS/FAN			15
15			AC	20/1	7	8	20/1	UPS / C.PNL	15		
				20/1	9	10	20/1	S.P. FLOW METER		15	
				20/1	11	12	20/1	OUTSIDE LIGHTS			15
				20/1	13	14	20/1	POLE LIGHT	15		
				20/1	15	16	20/1				
				20/1	17	18	20/1				
				20/1	19	20	20/1				
				20/1	21	22	20/1				
				20/1	23	24	20/1				
				20/1	25	26	20/1				
				20/1	27	28	20/1				
				20/1	29	30	20/1				
				20/1	31	32	20/1				
				20/1	33	34	20/1				
				20/1	35	36	20/1				
				20/1	37	38	20/1				
				20/1	39	40	20/1				
				20/1	41	42	20/1				
30	15	15	TOTALS						45	30	30

PANEL NAME: LP-BB
SERVICE VOLTAGE: 120/240 VAC
SC: 30KAIC

LOCATION: BLOWER BUILDING
PHASE: 3 WIRE: 4
BUS SIZE: 225A MAIN BREAKER SIZE: 225AF/175AT
NEUTRAL: FULL

LOAD IN KVA A	LOAD IN KVA B	LOAD IN KVA C	CIRCUIT DESCRIPTION	BKR A/P	CKT NO.	CKT NO.	BKR A/P	CIRCUIT DESCRIPTION	LOAD IN KVA A	LOAD IN KVA B	LOAD IN KVA C
15			OUTSIDE LIGHTS	20/1	1	2	20/1	VENT FAN #6	15		
	15		INSIDE LIGHTS	20/1	3	4	20/1	WINDOW FAN		15	
		15	BB INSIDE RECEPTICAL	20/1	5	6	20/1				15
15			BB OUTSIDE RECEPTICAL	20/1	7	8	20/1	VENT FAN #3	15		
	24		POLE LIGHT	30/1	9	10	20/1	WINDOW FAN		15	
		24	POLE LIGHT	30/1	11	12	20/1				15
15			WSP. REEP	20/1	13	14	80/1	PANEL "B"	64		
	15		POLE LIGHT	20/1	15	16	80/1			64	
		15	AEREATION LIGHTS	20/1	17	18	20/1	SPARE			15
15			AEREATION LIGHTS	20/1	19	20	20/1	WSP OANEL	15		
	15		PHOTO CELL	20/1	21	22	20/1	FRONT GATE		15	
		15	GATE LIGHT	20/1	23	24	20/1	SPARE			0
0			SPARE	20/1	25	26	20/1	SPARE	0		
	0		SPARE	20/1	27	28	20/1	WSP IO METER		15	
		0	SPARE	20/1	29	30	20/1	SPARE			0
				20/1	31	32	20/1				
				20/1	33	34	20/1				
				20/1	35	36	20/1				
				20/1	37	38	20/1				
				20/1	39	40	20/1				
				20/1	41	42	20/1				
60	69	69	TOTALS						109	124	45

LEGEND:

DEMOLITION SCOPE

NO.	DATE	REVISION	APP.

MBROH 20 ENGINEERING
11757 KATY FWY,
SUITE 625
HOUSTON, TX 77077
713-468-2545

THESE DOCUMENTS ARE FOR INTERIM REVIEW AND ARE NOT INTENDED FOR CONSTRUCTION, BIDDING, OR PERMIT PURPOSES.
HANS POURES
TEXAS P.E. NO. 131630
DATE: 11/5/2026

SURVEYED BY:
FB NO.

CITY OF HOUSTON
HOUSTON PUBLIC WORKS

WHITE OAKS WWTP IMPROVEMENTS

ELECTRICAL
DEMOLITION PANEL SCHEDULES

WBS NUMBER	FOR CITY OF HOUSTON USE ONLY
R-000265-0158-3	
DRAWING SCALE	
NONE	
CITY OF HOUSTON PM	
SHAHIDUR RAHMAN, PE	

E-37 SHEET NO. 162 OF 189

PLOTTED: 05/11/2026
FILE PATH: P:\Projects\0106 - City Of Houston\20031 - White Oak WWTP Phase II\4.0 CAD\4.2 Electrical\ARCHIVE\2026-9-15 CAD ELEC ARCHIVE\E-37 DEMOLITION PANEL SCHEDULES.dwgPLOT STYLE: ----

PLOTTED: 05/11/2026
PLOT STYLE: ----
FILE PATH: P:\Projects\0106 - City Of Houston\20031 - White Oak WWTP Phase II\4.0 CAD\4.2 Electrical\E-38 MODIFIED PANEL SCHEDULES I.dwg

APP.	REVISION	NO.	DATE

LOW VOLTAGE PANEL

PANEL NAME: LV PANEL WITHIN MCC-1
SERVICE VOLTAGE: 208/120V
MAIN BREAKER SIZE: 225A
SHORT CIRCUIT RATING: 35 KAIC
PHASE: 3 PHASE - 4 WIRE

LOCATION: MCC-1 WITHIN BLOWER BUILDING
MOUNTING: WALL MOUNTED
BUS RATING: 225A
ENCLOSURE TYPE: NEMA 1

VA/WATTS A	VA/WATTS B	VA/WATTS C	CKT. DESCRIPTION	BREAKER POLE	BREAKER AMPS	CKT NO.	PHASE A	PHASE B	PHASE C	CKT NO.	BREAKER POLE	BREAKER AMPS	CKT. DESCRIPTION	VA/WATTS A	VA/WATTS B	VA/WATTS C
			OUTSIDE LIGHTS	1	20	1	0			2	1	20	VENT FAN #6			
			INSIDE LIGHTS	1	20	3		0		4	2	20	WINDOWN FAN			
			BB INSIDE RECEPTACLE	1	20	5			0	6						
			BB OUTSIDE RECEPTACLE	1	20	7	0			8	1	20	VENT FAN #3			
			POLE LIGHT	1	20	9		0		10	2	20	WINDOWN FAN			
			POLE LIGHT	1	20	11			0	12						
			WSP. REEP	1	20	13	0			14	2	80	PANEL "B"			
			POLE LIGHT	1	20	15		0		16						
			AEREATION LIGHTS	1	20	17			0	18	1	20	SPARE			
			AEREATION LIGHTS	1	20	19	0			20	1	20	WSP PANEL			
			PHOTOCELL	1	20	21		0		22	1	20	FRONT GATE			
			GATE LIGHT	1	20	23			0	24	1	20	SPARE			
			SPARE	1	20	25	0			26	1	20	SPARE			
			SPARE	1	20	27		0		28	1	20	WSP IO METER			
			SPARE	1	20	29			0	30			EQUIPMENT SPACE			
			EQUIPMENT SPACE			31	0			32			EQUIPMENT SPACE			
			EQUIPMENT SPACE			33		0		34			EQUIPMENT SPACE			
			EQUIPMENT SPACE			35			0	36			EQUIPMENT SPACE			
			EQUIPMENT SPACE			37	0			38			EQUIPMENT SPACE			
			EQUIPMENT SPACE			39		0		40			EQUIPMENT SPACE			
			EQUIPMENT SPACE			41			0	42			EQUIPMENT SPACE			
NOTES:						TOTAL VA	0	TOTAL VA	0	TOTAL VA	0					

TOTAL CONNECTED LOAD: 0 VOLT-AMPS
PANEL AMPERAGE: 0 AMPS

DISINFECT BUILDING LOW VOLTAGE PANEL 200 (FED FROM 50-XFMR-02)

PANEL NAME: SLUDGE ELECTRICAL BUILDING PANEL
SERVICE VOLTAGE: 240/120V
MAIN BREAKER SIZE: 100A
SHORT CIRCUIT RATING: 10 KAIC
PHASE: 1 PHASE - 3 WIRE

LOCATION: SLUDGE ELECTRICAL BUILDING
MOUNTING: WALL MOUNTED
BUS RATING: 100A
ENCLOSURE TYPE: NEMA 1

VA/WATTS A	VA/WATTS C	CKT. DESCRIPTION	BREAKER POLE	BREAKER AMPS	CKT NO.	PHASE A	PHASE C	CKT NO.	BREAKER POLE	BREAKER AMPS	CKT. DESCRIPTION	VA/WATTS A	VA/WATTS C
		LIGHTS	1	20	1	0		2	1	20	RECEPTACLES		
		OUTER LIGHTS	1	20	3			4	1	20	OUT. RECEPTACLE		
		AC	1	20	5		0	6	1	20	C. PNL. LIGHTS/FAN		
		AC	1	20	7	0		8	1	20	UPS/C. PNL		
		SPARE	1	20	9			10	1	20	S.P. FLOW METER		
		SPARE	1	20	11		0	12	1	20	OUTSIDE LIGHTS		
		SPARE	1	20	13	0		14	1	20	POLE LIGHT		
		EQUIPMENT SPACE	1	20	15			16	1	20	EQUIPMENT SPACE		
		EQUIPMENT SPACE	1	20	17		0	18	1	20	EQUIPMENT SPACE		
		EQUIPMENT SPACE	1	20	19	0		20	1	20	EQUIPMENT SPACE		
		EQUIPMENT SPACE	1	20	21			22	1	20	EQUIPMENT SPACE		
		EQUIPMENT SPACE	1	20	23		0	24	1	20	EQUIPMENT SPACE		
NOTES:					TOTAL VA	0	TOTAL VA	0					

TOTAL CONNECTED LOAD: 0
PANEL AMPERAGE: 0

LOW VOLTAGE PANEL

ANALYZER BUILDING
SERVICE VOLTAGE: 240/120V
MAIN BREAKER SIZE: 100A
SHORT CIRCUIT RATING: 10 KAIC
PHASE: 1 PHASE - 3 WIRE

LOCATION: ANALYZER BUILDING
MOUNTING: WALL MOUNTED
BUS RATING: 100A
ENCLOSURE TYPE: NEMA 1

VA/WATTS A	VA/WATTS C	CKT. DESCRIPTION	BREAKER POLE	BREAKER AMPS	CKT NO.	PHASE A	PHASE C	CKT NO.	BREAKER POLE	BREAKER AMPS	CKT. DESCRIPTION	VA/WATTS A	VA/WATTS C
		PLC	1	20	1	0		2	1	20	SPARE		
		AC	1	20	3			4	1	20	SPARE		
		SPARE	1	20	5		0	6	1	20	SPARE		
		SPARE	1	20	7	0		8	1	20	HEAT TRACER		
		SPARE	1	20	9			10	1	20	HEAT TRACER		
		SPARE	1	20	11		0	12	1	20	SPARE		
		MIX PUMP	1	30	13	0		14	1	20	BLCH #1		
		PRE	1	30	15			16	1	20	BLCH #2		
		ANA	1	30	17		0	18	1	20	SPARE		
		I O	1	30	19	0		20	1	20	SPARE		
		MAIN BREAKER	2	100	21			22	1	20	SPARE		
		EQUIPMENT SPACE			23		0	24	1	20	SPARE		
NOTES:					TOTAL VA	0	TOTAL VA	0					

TOTAL CONNECTED LOAD: 0
PANEL AMPERAGE: 0

MBROH 20 ENGINEERING
11757 KATY FWY,
SUITE 625
HOUSTON, TX 77077
713-468-2545

SURVEYED BY:
FB NO.

THESE DOCUMENTS ARE FOR INTERIM REVIEW AND ARE NOT INTENDED FOR CONSTRUCTION, BIDDING, OR PERMIT PURPOSES.
HANS POURES
TEXAS P.E. NO. 131630
DATE: 11/5/2026

CITY OF HOUSTON
HOUSTON PUBLIC WORKS

WHITE OAKS WWTP IMPROVEMENTS

ELECTRICAL
MODIFIED PANEL SCHEDULES I

WBS NUMBER	FOR CITY OF HOUSTON USE ONLY
R-000265-0158-3	
DRAWING SCALE	
NONE	
CITY OF HOUSTON PM	
SHAHIDUR RAHMAN, PE	

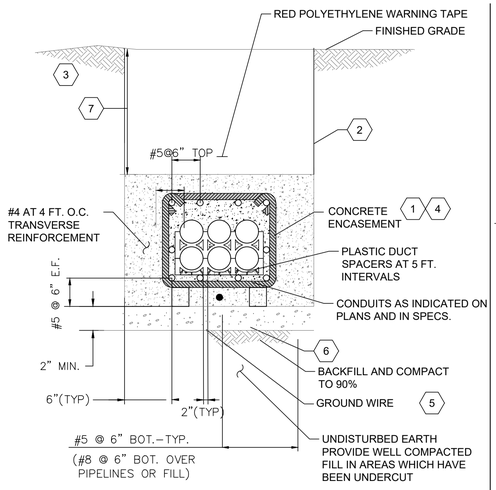

NOTES BY SYMBOL "⬡ # "

1. PROVIDE MIN. 3 INCHES CONCRETE COVER OVER AND UNDER REINFORCEMENT CAGE AND 6 INCHES ON EACH SIDE.
2. SELECT FILL FROM FINISH GRADE TO TOP OF DUCTBANK. COMPACT ALL BACKFILL IN 8 IN. LIFTS TO 90 PERCENT OF STANDARD PROCTOR (ASTM D 698) DENSITY, UNLESS UNDER EXISTING OR PROPOSED PAVEMENT, OTHER UNDERGROUND UTILITIES, OR STRUCTURES. IF DUCTBANK IS UNDER EXISTING OR PROPOSED PAVEMENT, OTHER UNDERGROUND UTILITIES, OR STRUCTURES, COMPACT ALL BACKFILL IN 8 IN. LIFTS TO 95 PERCENT OF STANDARD PROCTOR DENSITY.
3. REFER TO SPECIFICATION FOR ADDITIONAL REQUIREMENTS.
4. RED DYE TO BE MIXED IN CONCRETE BEFORE PLACEMENT.
5. BOND GROUND TO ALL GROUNDING GRIDS AND EQUIPMENT.
6. SUPPORT REBAR AT BOTTOM OF THE TRENCH WITH CMU (CONCRETE MASONRY UNITS) BLOCKS. EACH SET OF BLOCKS TO BE INSTALLED EVERY 10 FEET OR AS REQUIRED.
7. 2 FOOT MINIMUM FOR 480 VOLTS AND 3 FOOT MINIMUM FOR 4160 VOLTS.

REINFORCED CONCRETE ENCASED CONDUIT DUCT BANK

DETAIL A
SCALE: (NTS)

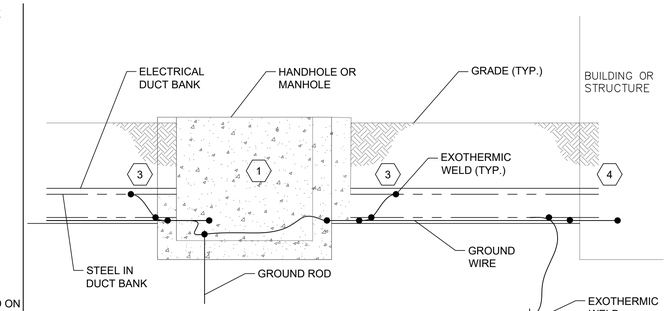

NOTES BY SYMBOL "⬡ # "

1. REFER TO ELECTRICAL MANHOLE DETAIL.
2. GROUND ROD TO BE 24" LATERALLY AWAY FROM DUCT BANK.
3. SEE DETAIL FOR WATERTIGHT DUCT PENETRATION BELOW GROUND MANHOLES OR HANDHOLES.
4. SEE DETAIL FOR WATERTIGHT DUCT PENETRATION STRUCTURES OTHER THAN MANHOLES OR HANDHOLES.

DUCT BANK GROUNDING

DETAIL B
SCALE: (NTS)

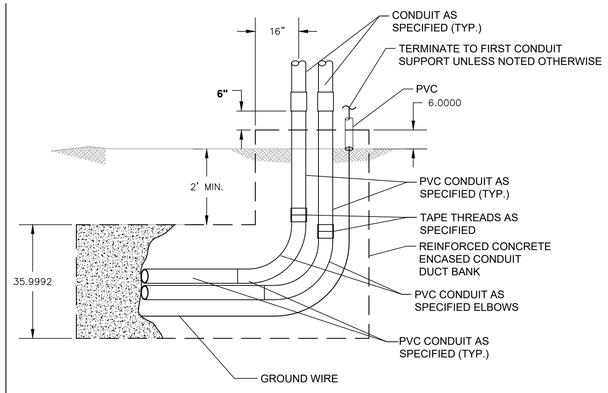

CONDUIT INSTALLATION FROM DUCT BANK TO ABOVE GROUND

DETAIL C
SCALE: (NTS)

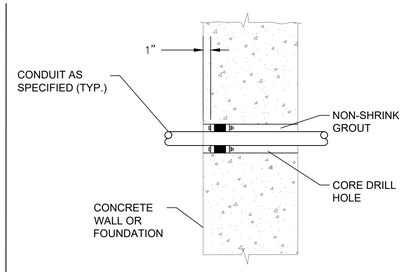

EXISTING STRUCTURE ABOVE GRADE WATERTIGHT CONDUIT PENETRATION

DETAIL D
SCALE: (NTS)

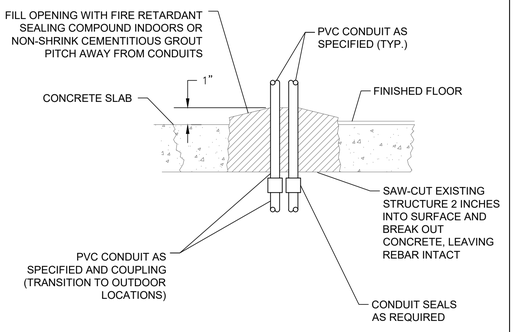

EXISTING CONCRETE SLAB-WET LOCATIONS WATERTIGHT CONDUIT PENETRATION

DETAIL E
SCALE: (NTS)

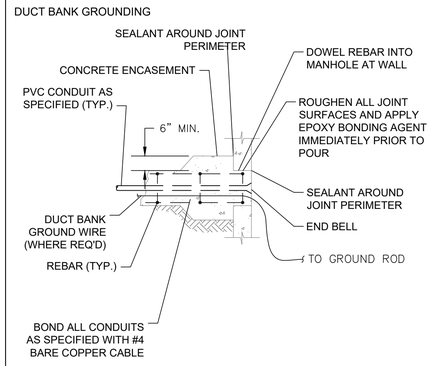

WATERTIGHT DUCT PENETRATION BELOW GROUND MANHOLES OR HANDHOLES

DETAIL F
SCALE: (NTS)

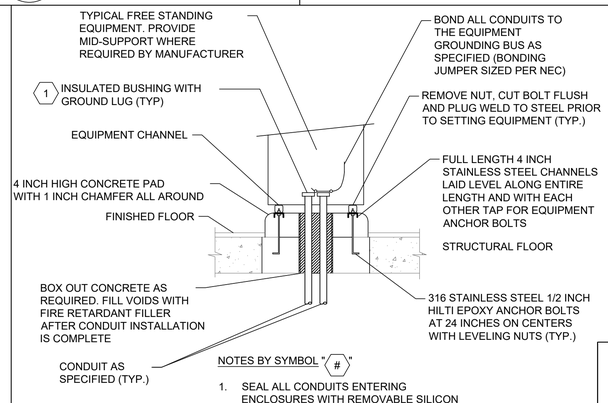

NOTES BY SYMBOL "⬡ # "

1. SEAL ALL CONDUITS ENTERING ENCLOSURES WITH REMOVABLE SILICON CAULK.

EQUIPMENT PAD

DETAIL G
SCALE: (NTS)

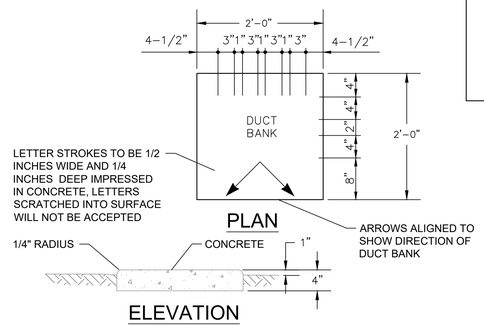

NOTES BY SYMBOL "⬡ # "

1. INSTALL AT 90' INTERVALS MAXIMUM OR ONE MARKER BETWEEN EACH MANHOLE OR HAND HOLE.
2. IF OCCURS IN PAVEMENT, MAKE FLUSH WITH PAVEMENT.

DUCT BANK MARKER DETAIL LOW VOLTAGE CONDUCTORS

DETAIL H
SCALE: (NTS)
2

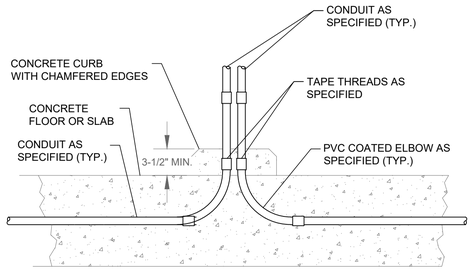

INTERIOR OR EXTERIOR - CONCEALED CONDUIT INSTALLATION CONCRETE FLOOR OR SLAB

DETAIL I
SCALE: (NTS)

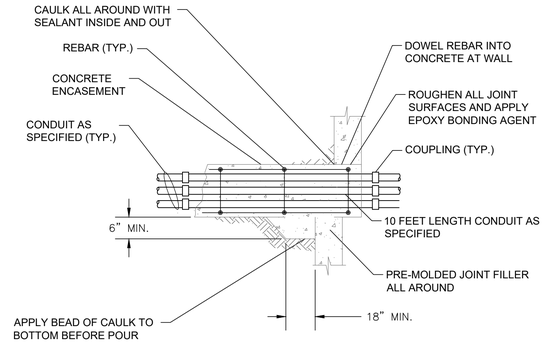

WATERTIGHT DUCT PENETRATION BELOW GRADE STRUCTURES OTHER THAN MANHOLES OR HANDHOLES

DETAIL J
SCALE: (NTS)

NO.	DATE	REVISION	APP.

MBROH ENGINEERING 20
11757 KATY FWY,
SUITE 625
HOUSTON, TX 77077
713-468-2545

SURVEYED BY:
FB NO.

THESE DOCUMENTS ARE FOR INTERIM REVIEW AND ARE NOT INTENDED FOR CONSTRUCTION, BIDDING, OR PERMIT PURPOSES.
HANS POURES
TEXAS P.E. NO. 131630
DATE: 11/5/2026

CITY OF HOUSTON
HOUSTON PUBLIC WORKS

WHITE OAKS WWTP IMPROVEMENTS

ELECTRICAL

STANDARD DETAILS I

WBS NUMBER	FOR CITY OF HOUSTON USE ONLY
R-000265-0158-3	
DRAWING SCALE	
NONE	
CITY OF HOUSTON PM	
SHAHIDUR RAHMAN, PE	

E-39 SHEET NO. 164 OF 189

PLOTTED: 05/11/2026
PLOT STYLE: ----
FILE PATH: P:\Projects\0106 - City Of Houston\20031 - White Oak WWTP Phase II\4.0 CAD\4.2 Electrical\E-39 STANDARD DETAILS I.dwg

PLOTTED: 05/11/2026
PLOT STYLE: ----
FILE PATH: P:\Projects\0106 - City Of Houston\20031 - White Oak WWTP Phase II\4.0 CAD\4.2 Electrical\E-40 STANDARD DETAILS II.dwg

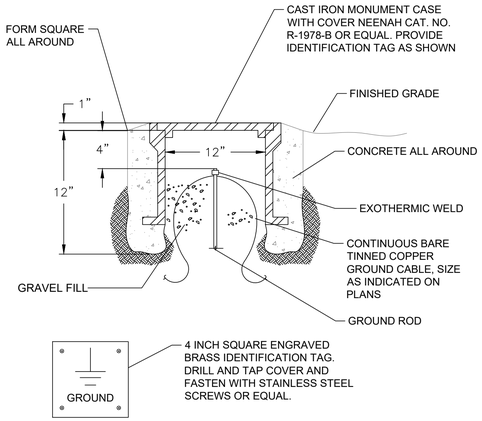

GROUND TEST WELL

DETAIL A
SCALE: (NTS)

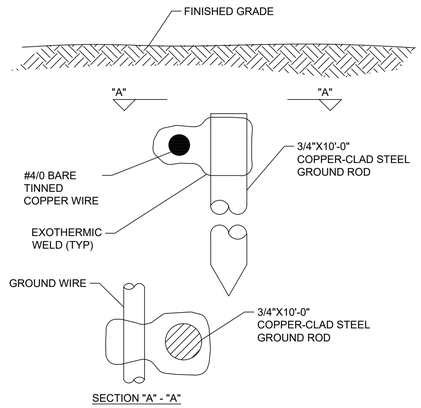

GROUND ROD

DETAIL B
SCALE: (NTS)

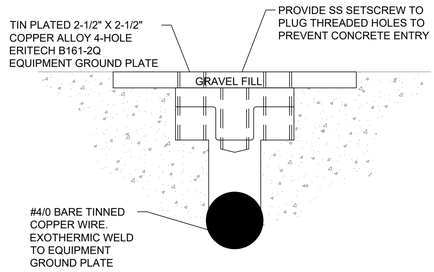

GENERAL NOTES

1. USE THIS FOR ALL OUTSIDE GROUND CONNECTIONS TO ELECTRICAL EQUIPMENT. PIGTAILS ARE PERMITTED ONLY INSIDE OF ELECTRICAL EQUIPMENT.
2. ATTACH GROUND TO EQUIPMENT USING XHHW-2 INSULATED BONDING JUMPER. USE LONG BARREL LUGS.

GROUND PLATE DETAIL

DETAIL C
SCALE: (NTS)

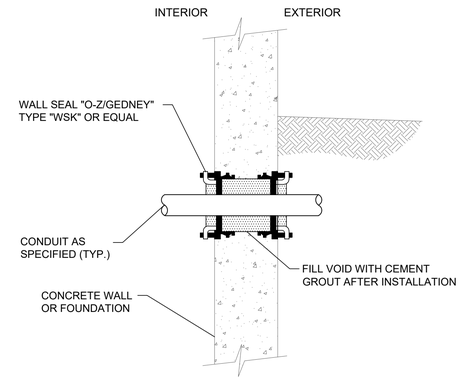

CONCRETE WALL-
CONDUIT PENETRATION

DETAIL D
SCALE: (NTS)

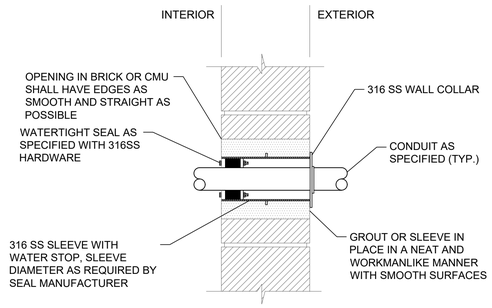

CONCEALED CONDUIT INSTALLATION EXTERIOR
BLOCK OR CONDUIT PENETRATIONS

DETAIL E
SCALE: (NTS)

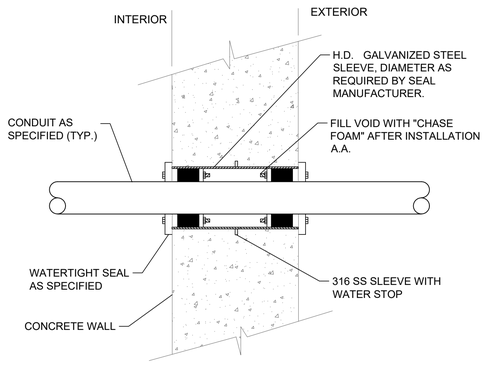

NEW CONSTRUCTION CONCRETE BELOW
GRADE - CONCEALED CONDUIT INSTALLATION

DETAIL F
SCALE: (NTS)

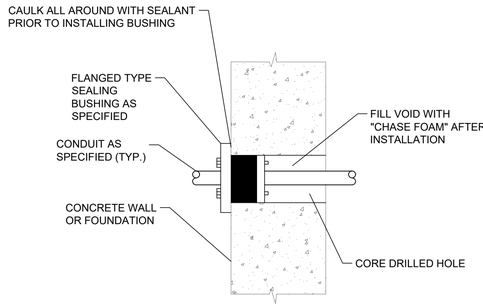

EXISTING STRUCTURES ABOVE GRADE
WATERTIGHT CONDUIT PENETRATION

DETAIL G
SCALE: (NTS)

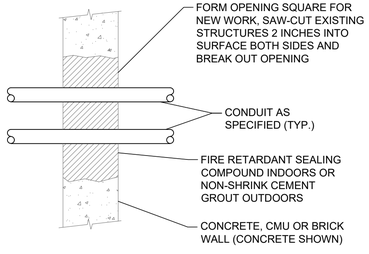

GENERAL NOTES

1. LEAVE REBAR INTACT WHEN BREAKING OUT EXISTING WALLS.

BLOCK OR CONCRETE WALL-
INTERIOR CONDUIT PENETRATION

DETAIL H
SCALE: (NTS)

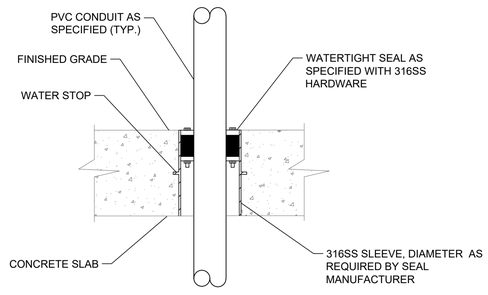

NEW CONSTRUCTION CONCRETE SLAB -
WATERTIGHT CONDUIT PENETRATION

DETAIL I
SCALE: (NTS)

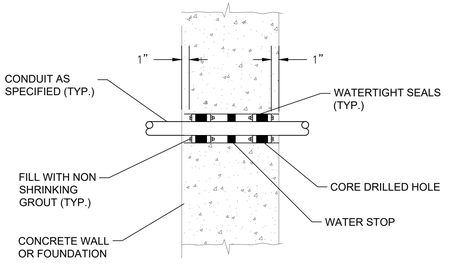

EXISTING STRUCTURE BELOW
GRADE - WATERTIGHT CONDUIT PENETRATION

DETAIL J
SCALE: (NTS)

NO.	DATE	REVISION	APP.

MBROH 20 ENGINEERING
11757 KATY FWY,
SUITE 625
HOUSTON, TX 77077
713-468-2545

SURVEYED BY:
FB NO.

THESE DOCUMENTS ARE FOR INTERIM REVIEW AND ARE NOT INTENDED FOR CONSTRUCTION, BIDDING, OR PERMIT PURPOSES.
HANS POURES
TEXAS P.E. NO. 131630
DATE: 11/5/2026

CITY OF HOUSTON
HOUSTON PUBLIC WORKS

WHITE OAKS WWTP IMPROVEMENTS

ELECTRICAL

STANDARD DETAILS II

WBS NUMBER	FOR CITY OF HOUSTON USE ONLY
R-000265-0158-3	
DRAWING SCALE	
NONE	
CITY OF HOUSTON PM	
SHAHIDUR RAHMAN, PE	

PLOTTED: 05/11/2026
PLOT STYLE: ----
FILE PATH: P:\Projects\0106 - City Of Houston\20031 - White Oak WWTP Phase II\4.0 CAD\4.2 Electrical\E-41 STANDARD DETAILS III.dwg

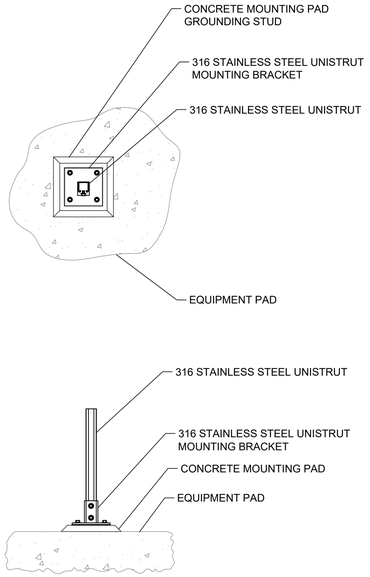

UNISTRUT CONCRETE MOUNTING

DETAIL A
SCALE: (NTS) -

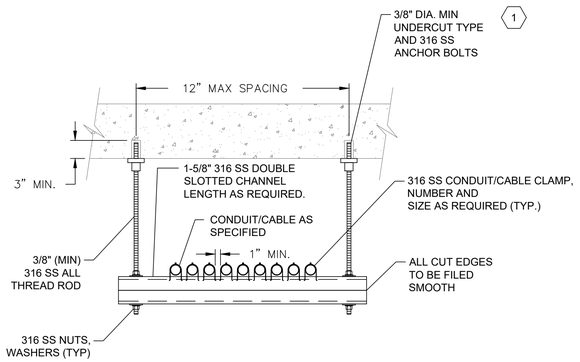

KEY NOTES:

1. CONTRACTOR WILL BE RESPONSIBLE FOR PROVIDING THE CORRECT SIZE ANCHOR BOLTS BASED ON LOAD. ANCHOR BOLTS SHALL NOT UTILIZE ADHESIVES.

TRAPEZE CONDUIT/CABLE SUPPORT

DETAIL B
SCALE: (NTS) -

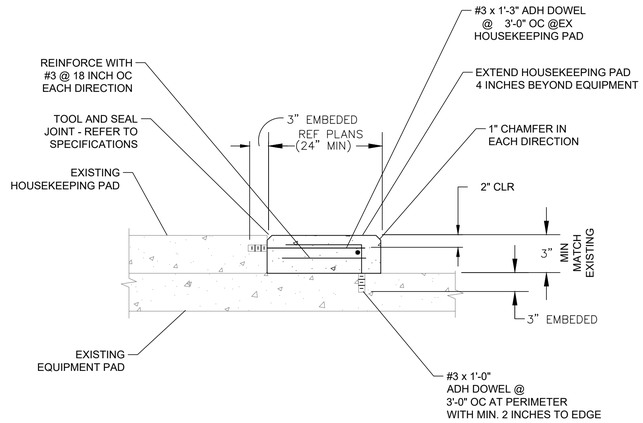

TYPICAL HOUSEKEEPING
PAD MODIFICATION

DETAIL C
SCALE: (NTS) -

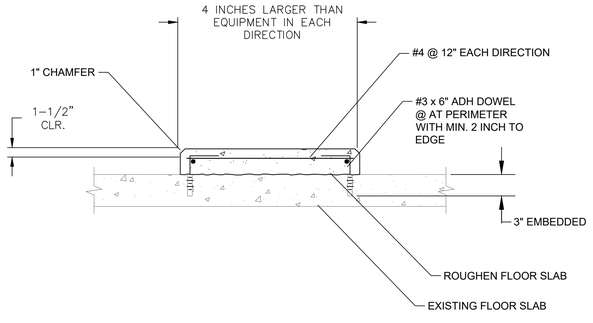

TYPICAL HOUSEKEEPING PAD

DETAIL D
SCALE: (NTS) -

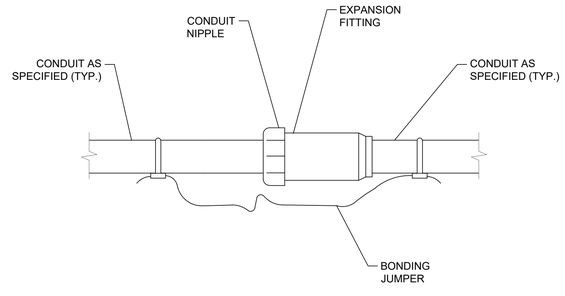

TYPICAL EXPANSION FITTING CONNECTION

DETAIL E
SCALE: (NTS) -

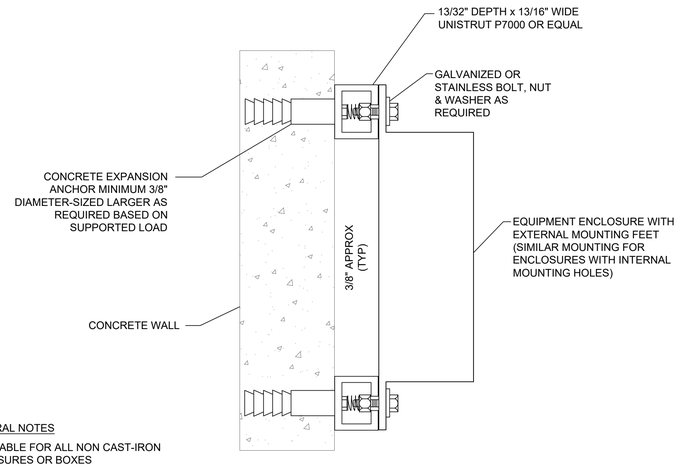

GENERAL NOTES

APPLICABLE FOR ALL NON CAST-IRON ENCLOSURES OR BOXES

EQUIPMENT ENCLOSURE
MOUNTING ON CONCRETE WALL

DETAIL F
SCALE: (NTS) -

NO.	DATE	REVISION	APP.

MBROH 20 ENGINEERING
11757 KATY FWY,
SUITE 625
HOUSTON, TX 77077
713-468-2545

SURVEYED BY:
FB NO.

THESE DOCUMENTS ARE FOR INTERIM REVIEW AND ARE NOT INTENDED FOR CONSTRUCTION, BIDDING, OR PERMIT PURPOSES.
HANS POURES
TEXAS P.E. NO. 131630
DATE: 11/5/2026

CITY OF HOUSTON
HOUSTON PUBLIC WORKS

WHITE OAKS WWTP IMPROVEMENTS

ELECTRICAL

STANDARD DETAILS III

WBS NUMBER	FOR CITY OF HOUSTON USE ONLY
R-000265-0158-3	
DRAWING SCALE	
NONE	
CITY OF HOUSTON PM	
SHAHIDUR RAHMAN, PE	

PLOTTED: 05/11/2026
PLOT STYLE: ----
FILE PATH: P:\Projects\0106 - City Of Houston\20031 - White Oak WWTP Phase II\4.0 CAD\4.2 Electrical\E-42 STANDARD DETAILS IV.dwg

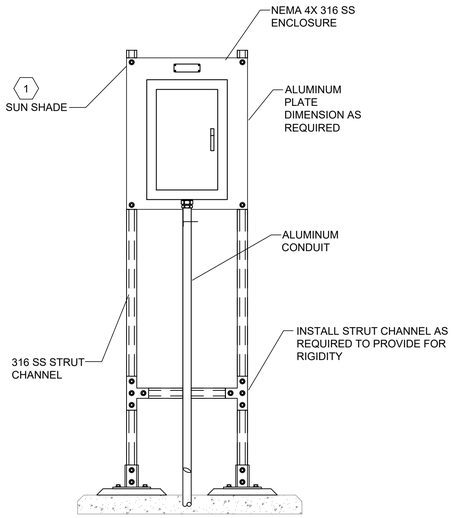

EQUIPMENT INSTALLATION

DETAIL A
SCALE: (NTS)

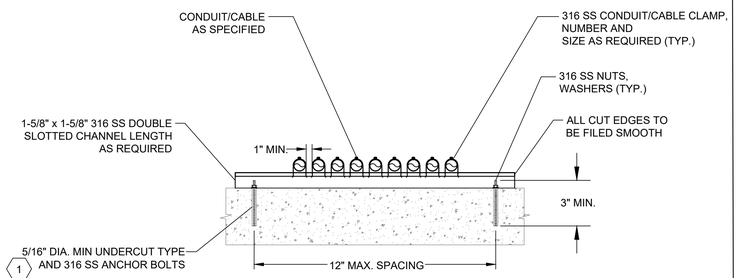

KEY NOTES:

1. CONTRACTOR WILL BE RESPONSIBLE FOR PROVIDING THE CORRECT SIZE ANCHOR BOLTS BASED ON LOAD.

FLOOR MULTIPLE EXPOSED CONDUIT /CABLE INSTALLATION

DETAIL B
SCALE: (NTS)

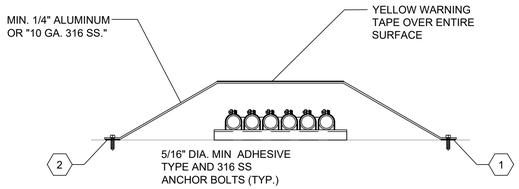

KEY NOTES:

1. PROVIDE 1/8" NEOPRENE GASKET WHERE ALUMINUM IS SELECTED. DO NOT ALLOW ALUMINUM TO COME INTO DIRECT CONTACT WITH CONCRETE.
2. CONTRACTOR WILL BE RESPONSIBLE FOR PROVIDING THE CORRECT SIZE ANCHOR BOLTS BASED ON LOAD.

CONDUIT COVER

DETAIL C
SCALE: (NTS)

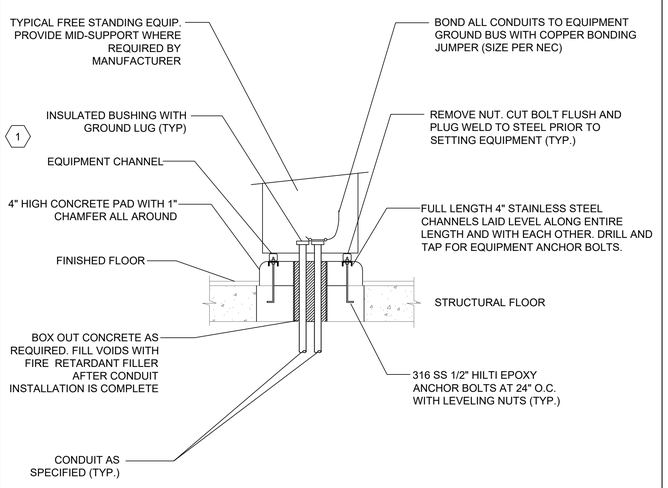

KEY NOTES:

1. SEAL ALL CONDUITS ENTERING ENCLOSURES WITH REMOVABLE SILICONE CAULK.

EQUIPMENT PAD DETAIL

DETAIL D
SCALE: (NTS)

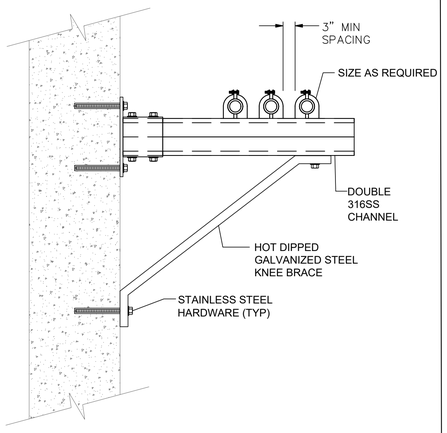

EQUIPMENT INSTALLATION

DETAIL E
SCALE: (NTS)

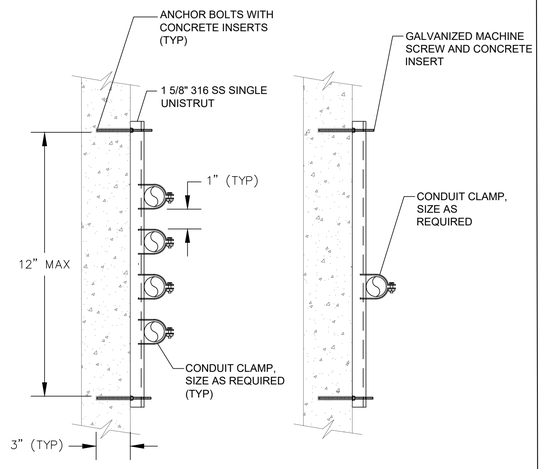

WALL MOUNTED

DETAIL F
SCALE: (NTS)

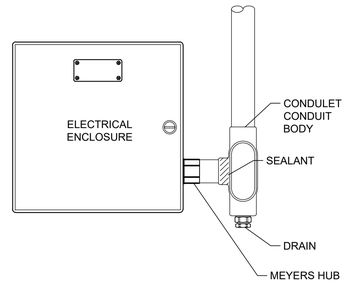

WET AREA CONDUIT ENTRY

DETAIL G
SCALE: (NTS)

REVISION	NO.	DATE	APP.

MBROH 20 ENGINEERING
11757 KATY FWY,
SUITE 625
HOUSTON, TX 77077
713-468-2545

SURVEYED BY:
FB NO.

THESE DOCUMENTS ARE FOR INTERIM REVIEW AND ARE NOT INTENDED FOR CONSTRUCTION, BIDDING, OR PERMIT PURPOSES.
HANS POURES
TEXAS P.E. NO. 131630
DATE: 11/5/2026

CITY OF HOUSTON
HOUSTON PUBLIC WORKS

WHITE OAKS WWTP IMPROVEMENTS

ELECTRICAL

STANDARD DETAILS IV

WBS NUMBER	FOR CITY OF HOUSTON USE ONLY
R-000265-0158-3	
DRAWING SCALE	
NONE	
CITY OF HOUSTON PM	
SHAHIDUR RAHMAN, PE	

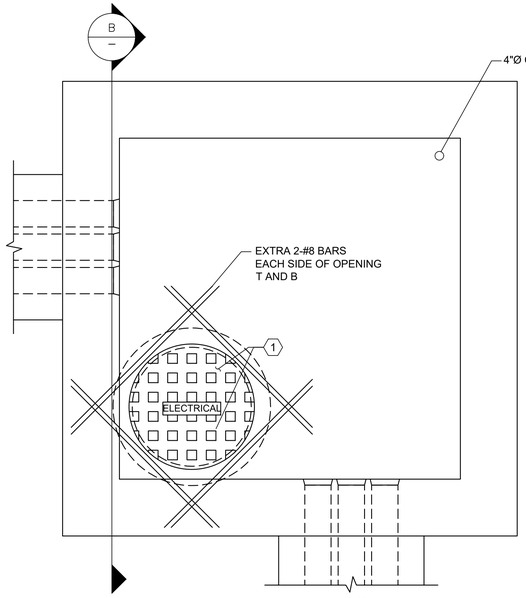

MANHOLE

DETAIL A
SCALE: (NTS)

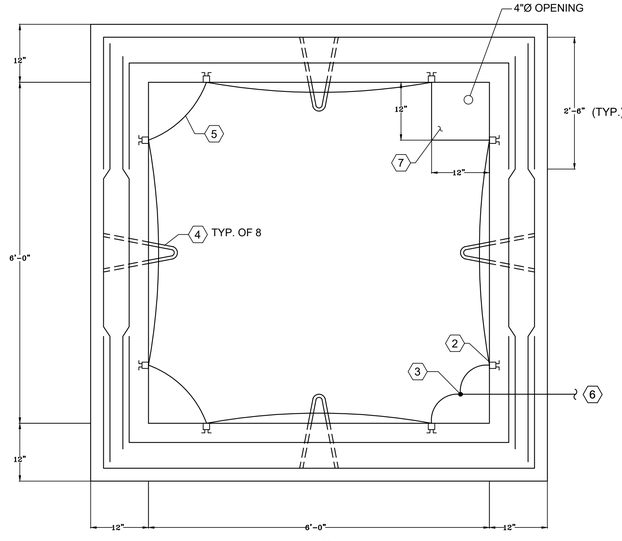

SECTION

SECTION C
SCALE: (NTS)

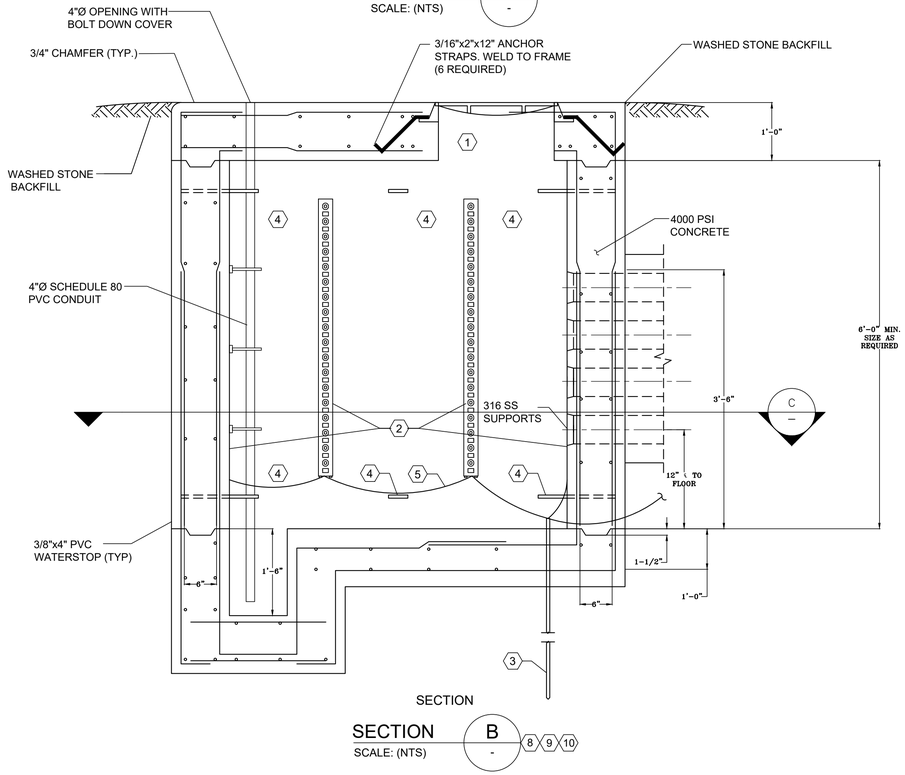

SECTION

SECTION B
SCALE: (NTS)

8 9 10

KEY NOTES:

1. NEENAH FOUNDRY CO., MANHOLE COVER AND FRAME. MODEL NO. R-1752 OR APPROVED EQUAL. COVER TO HAVE VENT HOLES AND SHALL BE RATED FOR HL-93 LOADING.
2. HOT-DIPPED GALVANIZED STEEL CABLE RACKS.
3. 3/4"Ø x 10'-0" COPPER GROUND ROD.
4. PROVIDE PULLING IRONS ON EACH WALL, PULLING TENSION OF 12,000 POUNDS ON EACH.
5. #4/0 TINNED STRANDED COPPER CONDUCTOR CADWELD TO UNISTRUT, GROUNDING ROD, AND FRAME.
6. #4/0 TINNED STRANDED COPPER CONDUCTOR TO MAIN GROUND GRID.
7. MANHOLES SHALL BE EQUIPPED WITH SUMP IN OPPOSITE CORNER FROM MANHOLE COVER.
8. MANHOLES SHALL BE CONSTRUCTED FOR HL-93 HIGHWAY LOADING, PLUS REQUIRED EARTH COVER.
9. MANHOLE EXTENSIONS SHALL BE USED WHENEVER BOX IS BELOW EXISTING GRADE. THE EXTENSION SHALL BE CONSTRUCTED FOR HS-20-44 HIGHWAY LOADING.
10. ADDITIONAL REINFORCING LENGTH TO PROVIDE REQUIRED DEVELOPMENT LENGTH AS PER THE LATEST EDITION OF THE ACI-318. BARS SHALL BE BENT TO PROVIDE DEVELOPMENT LENGTH IF THERE IS NOT SUFFICIENT SPACE.

NO.	DATE	REVISION	APP.

MBROH 20 ENGINEERING
11757 KATY FWY,
SUITE 625
HOUSTON, TX 77077
713-468-2545

SURVEYED BY:
FB NO.

THESE DOCUMENTS ARE FOR INTERIM REVIEW AND ARE NOT INTENDED FOR CONSTRUCTION, BIDDING, OR PERMIT PURPOSES.
HANS POURES
TEXAS P.E. NO. 131630
DATE: 11/5/2026

CITY OF HOUSTON
HOUSTON PUBLIC WORKS

WHITE OAKS WWTP IMPROVEMENTS

ELECTRICAL

STANDARD DETAILS V

WBS NUMBER	FOR CITY OF HOUSTON USE ONLY
R-000265-0158-3	
DRAWING SCALE	
NONE	
CITY OF HOUSTON PM	
SHAHIDUR RAHMAN, PE	
SHEET NO. 168 OF 189	

E-43

PLOTTED: 05/11/2026
PLOT STYLE: ----
FILE PATH: P:\Projects\0106 - City Of Houston\20031 - White Oak WWTP Phase II\4.0 CAD\4.2 Electrical\E-43 STANDARD DETAILS V.dwg

PLOTTED: 05/11/2026
PLOT STYLE: ----
FILE PATH: P:\Projects\0106 - City Of Houston\20031 - White Oak WWTP Phase II\4.0 CAD\4.2 Electrical\E-44 STANDARD DETAILS VI.dwg

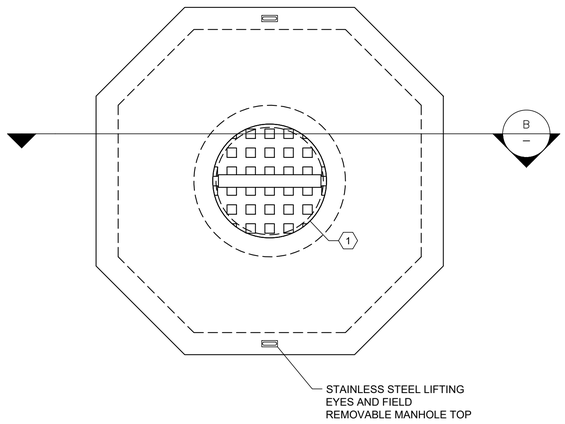

MANHOLE

DETAIL A
SCALE: (NTS)

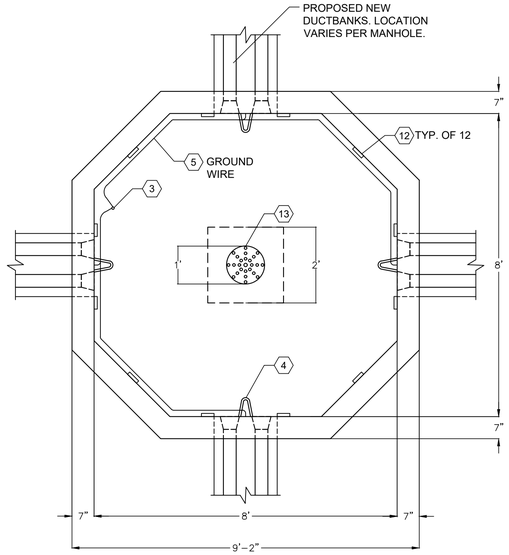

SECTION C
SCALE: (NTS)

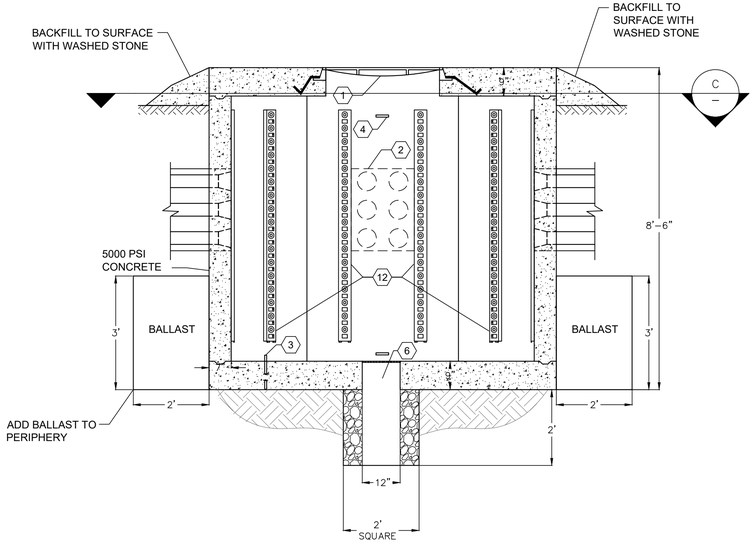

SECTION B
SCALE: (NTS)
7 8 9 10 11 14

KEY NOTES:

1. MANHOLE COVER SHALL BE AS SPECIFIED, AND SHALL BE STAMPED ELECTRICAL OR COMMUNICATION AS REQUIRED BY CONTRACTOR. ENTIRE STRUCTURE SHALL BE RATED FOR HL-93 LOADING.
2. ALL CONDUITS SHALL BE TERMINATED IN MANHOLE WITH BELL ENDS AND CENTER ON THE ENTERING WALL.
3. 3/4"Ø X 10'-0" STAINLESS STEEL (ONLY AT TRA, COPPER CLAD STEEL OTHERWISE) GROUND ROD.
4. PROVIDE PULLING IRONS AS SPECIFIED.
5. #4/0 BARE STRANDED TINNED COPPER CONDUCTOR TO MAIN GROUND GRID.
6. MANHOLES SHALL BE EQUIPPED WITH 12" SUMP OPENING.
7. MANHOLE EXTENSIONS SHALL BE USED WHENEVER BOX IS BELOW EXISTING GRADE.
8. ANCHORS SHALL BE 316 SS AS SPECIFIED.
9. MANHOLES SHALL BE FLUSH WITH THE PAVEMENT WHEN INSTALLED IN ROADWAYS.
10. MANHOLE SHALL BE 12" ABOVE GRADE WHEN LOCATED IN GRASSY AREAS. CONTRACTOR SHALL PROVIDE A 12" MOW STRIP 6" TALL AROUND MANHOLE.
11. SHALL BE PLASTIC GRATE.
12. MOUNTING RACKS SHALL BE AS SPECIFIED.
13. TO BE FILLED WITH PEA GRAVEL.
14. REFER TO SPECIFICATIONS FOR ADDITIONAL INFORMATION.

NO.	DATE	REVISION	APP.

MBROH ENGINEERING 20
11757 KATY FWY,
SUITE 625
HOUSTON, TX 77077
713-468-2545

SURVEYED BY:
FB NO.

THESE DOCUMENTS ARE FOR INTERIM REVIEW AND ARE NOT INTENDED FOR CONSTRUCTION, BIDDING, OR PERMIT PURPOSES.
HANS POURES
TEXAS P.E. NO. 131630
DATE: 11/5/2026

CITY OF HOUSTON
HOUSTON PUBLIC WORKS

WHITE OAKS WWTP IMPROVEMENTS

ELECTRICAL

STANDARD DETAILS VI

WBS NUMBER	FOR CITY OF HOUSTON USE ONLY
R-000265-0158-3	
DRAWING SCALE	
NONE	
CITY OF HOUSTON PM	
SHAHIDUR RAHMAN, PE	

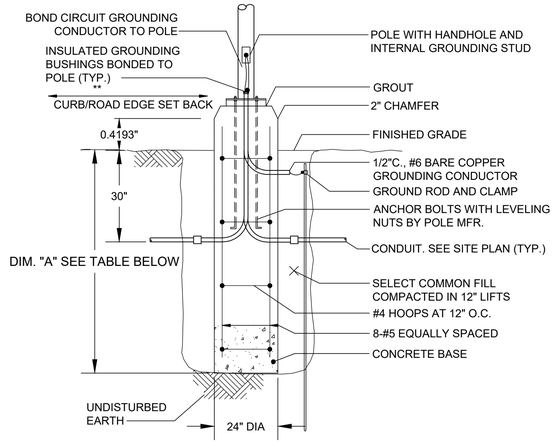

POLE HEIGHT	DIMENSION "A"
10'-0"	4'-6"
20'-0"	4'-6"
30'-0"	6'-6"
40'-0"	6'-6"

NOTES BY SYMBOL "⬡":

1. REFER TO SPECIFICATIONS FOR MATERIALS

* = 2" AT WALKWAYS; 18" AT ROADWAYS & PARKING AREAS

** = 48" AT WALKWAYS; 24" AT ROADWAYS

STANDARD LIGHT BASE
CONCRETE BASE MOUNTED LIGHT POLE

DETAIL A
SCALE: (NTS) -

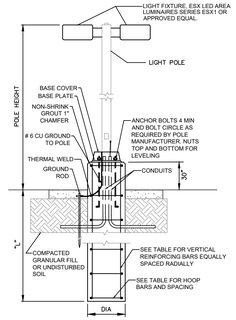

NOTES:
1. USE STAINLESS STEEL NUTS AND LOCKWASHERS.
2. INSTALL 2 CONDUITS (MINIMUM) PER POLE.
3. CONDUITS SHALL BE STUBBED UP TO WITHIN 6 INCHES OF THE POLE HANDHOLE.
4. FOR PROPER ORIENTATION OF POLE, COORDINATE WITH SITE PLANS.
5. LIGHTING CONTRACTOR TO DESIGN SPECIFIC POLE BASED ON THE SITE REQUIREMENT.

TABLE				
MAX. POLE HEIGHT	DIAMETER	"L"	VERTICAL BARS	HOOP BARS
12'-0"	2'-0"	4'-0"	6-#6	#3@12"
16'-0"	2'-0"	5"-0"	6-#6	#3@12"

LIGHT FIXTURE
WITH BASE AND POLE

DETAIL B
SCALE: (NTS) -

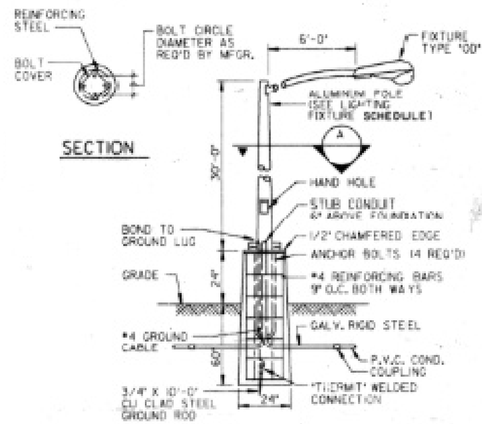

STREET LIGHT INSTALLATION DETAIL

NOT TO SCALE

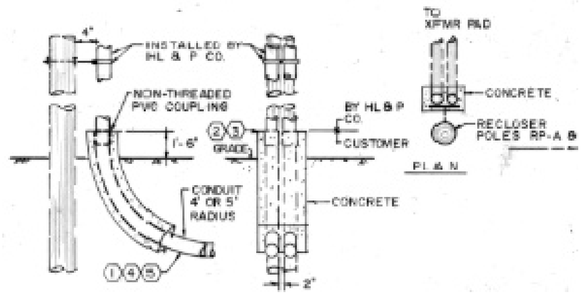

EXISTING STREET
LIGHT INSTALLATION

DETAIL C
-

LIGHTING FIXTURE SCHEDULE					
TYPE	MANUFACTURER AND CATALOG NO.	LAMP	CIRCUIT VOLTAGE	MOUNTING	REMARKS
OB	COOPER-CROUSE HINDS CAT. *VMVSJ070OP/277	1-70W HPS CLEAR	277	STANCHION	COPPER FREE ALUMINUM BALLAST HOUSING STAINLESS STEEL EXTERIOR HARDWARE, VENTED KRYDON REFLECTOR, WITH CONFIGURED GLASS GLOBE & GUARD.
OD	COOPER-CROUSE HINDS CAT. *OVS20SCW2EP /277	1-200W HPS CLEAR	277	30 FT. POLE MOUNTED	DIE CAST ALUMINUM HOUSING, ANODIZED ALUMINUM REFLECTOR, POLYCARBONATE LENS FILTERED OPTICAL SYSTEM, CONSTANT WATTAGE HIGH POWER FACTOR BALLAST

* CROUSE HINDS CAT. # RTA-7L-30-AAH16

EXISTING
LIGHTING FIXTURE SCHEDULE

TABLE E
-

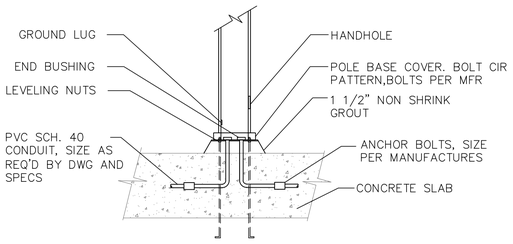

STANDARD LIGHT BASE
CONCRETE BASE MOUNTED LIGHT POLE

DETAIL D
SCALE: (NTS) -

REVISION	NO.	DATE	APP.

MBROH ENGINEERING 20
11757 KATY FWY,
SUITE 625
HOUSTON, TX 77077
713-468-2545

SURVEYED BY:
FB NO.

THESE DOCUMENTS ARE FOR INTERIM REVIEW AND ARE NOT INTENDED FOR CONSTRUCTION, BIDDING, OR PERMIT PURPOSES.
HANS POURES
TEXAS P.E. NO. 131630
DATE: 11/5/2026

CITY OF HOUSTON
HOUSTON PUBLIC WORKS

WHITE OAKS WWTP IMPROVEMENTS

ELECTRICAL

STANDARD DETAILS VII

WBS NUMBER	FOR CITY OF HOUSTON USE ONLY
R-000265-0158-3	
DRAWING SCALE	
NONE	
CITY OF HOUSTON PM	
SHAHIDUR RAHMAN, PE	
E-45	SHEET NO. 170 OF 189

PLOTTED: 05/11/2026
PLOT STYLE: ----
FILE PATH: P:\Projects\0106 - City Of Houston\20031 - White Oak WWTP Phase II\4.0 CAD\4.2 Electrical\E-45 STANDARD DETAILS VII.dwg

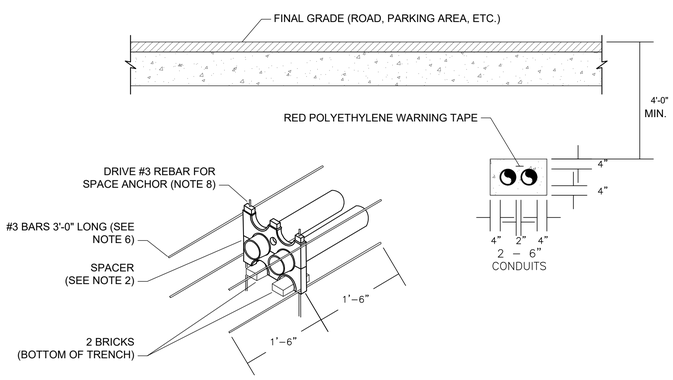

NOTES

INSTALLATION REQUIREMENTS ARE BASED ON CENTERPOINT ENERGY DISTRIBUTION STANDARDS DLFS2C.

1. ALL CONDUITS SHALL BE PVC, MINIMUM TYPE EB, UNLESS NOTED OTHERWISE.
2. CONDUIT SPACERS SHALL BE INSTALLED AT A MAXIMUM SPACING OF 10 FEET ON CENTER.
3. CONDUITS TERMINATING AT MANHOLES SHALL BE INSTALLED WITH A MINIMUM 0.5 PERCENT SLOPE DOWNWARD TOWARD THE MANHOLE.
4. EXTERIOR CONCRETE COVER DIMENSIONS SHOWN ARE MINIMUM REQUIRED.
5. CONCRETE SHALL BE INSTALLED IN ACCORDANCE WITH CENTERPOINT ENERGY SPECIFICATION 007-221-01, LATEST REVISION.
6. PROVIDE REINFORCING STEEL AT ALL FOUR CORNERS OF THE CONCRETE ENVELOPE WHERE SPACERS ARE UTILIZED.
7. AT COLD CONSTRUCTION JOINTS, PROVIDE #5 REINFORCING BARS, MINIMUM 3 FEET-0 INCHES LONG, WITH 1 FOOT-6 INCHES EXPOSED FOR CONTINUATION.
8. REINFORCING BAR LENGTH USED FOR SPACER ANCHORAGE SHALL VARY AS REQUIRED BASED ON DUCTBANK HEIGHT.
9. ALL CONDUIT ENDS SHALL BE SECURELY CAPPED USING DUCT CAPS OR OTHER APPROVED DEVICES TO PREVENT DEBRIS AND MOISTURE INTRUSION.
10. MAINTAIN A MINIMUM 1-FOOT VERTICAL CLEARANCE BETWEEN CENTERPOINT ENERGY DUCTBANKS AND ALL NON-CENTERPOINT UTILITIES CROSSING THE DUCTBANK.
11. MAINTAIN A MINIMUM 5-FOOT HORIZONTAL CLEARANCE BETWEEN CENTERPOINT ENERGY DUCTBANKS AND ALL NON-CENTERPOINT UTILITIES RUNNING PARALLEL TO THE DUCTBANK. JOINT TRENCHING IS NOT PERMITTED.
12. INSTALL PULL TAPE (JET LINE) IN ALL CONDUITS, AND INSTALL ONE (1) #14 AWG COPPER WIRE IN ONE CONDUIT.

THREE PHASE
DUCTBANK FEEDER

DETAIL A
SCALE: (NTS) -

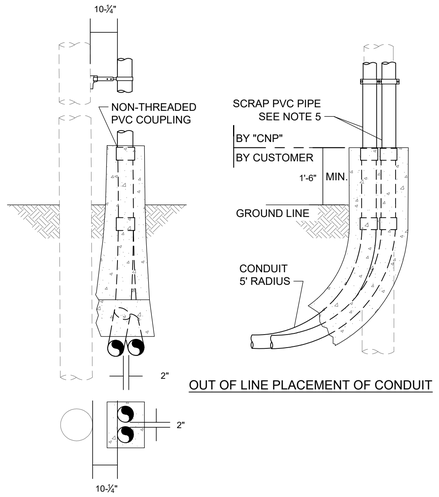

OUT OF LINE PLACEMENT OF CONDUIT

NOTES

INSTALLATION REQUIREMENTS ARE BASED ON CENTERPOINT ENERGY DISTRIBUTION STANDARDS 65-500.

1. ALL CONDUIT BENDS AT THE TERMINAL POLE SHALL BE PVC UNLESS OTHERWISE NOTED.
2. THE TERMINAL POLE SHALL BE SECURELY BRACED PRIOR TO TRENCHING OPERATIONS.
3. PROVIDE CONDUIT BENDS EXTENDING TO THE BASE OF THE POLE. INSTALL ADDITIONAL STRAIGHT CONDUIT SECTIONS AS REQUIRED TO ACHIEVE THE SPECIFIED HEIGHT ABOVE FINISHED GRADE.
4. PROVIDE A COUPLING AT THE END OF EACH CONDUIT.
5. INSERT A SHORT SECTION OF SCRAP PVC CONDUIT INTO THE TOP COUPLING, BUT DO NOT GLUE. SECURE THE SCRAP CONDUIT TO THE POLE BRACKET AS REQUIRED.
6. FORM A CONCRETE PEDESTAL AROUND THE BASE OF THE POLE UP TO THE TOP OF THE CONDUIT COUPLING. CONCRETE SHALL NOT BE IN DIRECT CONTACT WITH THE POLE.
7. FOLLOWING INSPECTION AND APPROVAL BY CENTERPOINT ENERGY (CNP), PLACE CONCRETE TO THE TOP OF ALL CONDUIT COUPLINGS.
8. ALL CONDUITS SHALL BE INSTALLED WITH A MINIMUM OF 4 INCHES OF CONCRETE COVER.

TERMINAL POLE CONDUIT
PLACEMENT 12KV & 35KV

DETAIL B
SCALE: (NTS) -

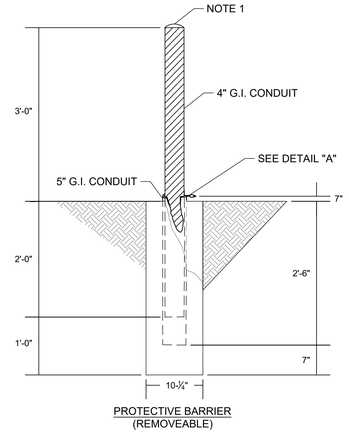

PROTECTIVE BARRIER
(REMOVEABLE)

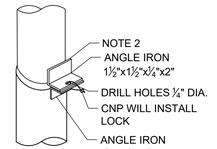

DETAIL "A"

* INSTALL ON APPROXIMATELY 4' CENTERS AS SHOWN ON DRAWING

NOTES

INSTALLATION REQUIREMENTS ARE BASED ON CENTERPOINT ENERGY DISTRIBUTION STANDARDS 80-950.

1. 4-INCH GALVANIZED RIGID STEEL (G.I.) CONDUIT SHALL BE COMPLETELY FILLED WITH CONCRETE.
2. STEEL ANGLE SHALL BE WELDED TO THE G.I. CONDUIT. ALL EXPOSED METAL SURFACES SHALL BE PAINTED WITH AN APPROVED CORROSION-RESISTANT COATING.
3. SEAL ALL GAPS BETWEEN CONDUITS USING DUCT SEAL TO PROVIDE A WATERTIGHT INSTALLATION.
4. PROVIDE NO. 5 PLUG AT THE TOP OF THE 5-INCH G.I. CONDUIT TO PREVENT CONCRETE MIGRATION INTO THE CONDUIT.

PROTECTIVE BARRIER
(REMOVABLE)

DETAIL C
SCALE: (NTS) -

GENERAL NOTES

1. ELECTRICAL CONTRACTOR SHALL REQUEST AND ATTEND A PRECONSTRUCTION MEETING WITH CENTERPOINT ENERGY PRIOR TO THE START OF CONSTRUCTION. COORDINATION SHALL BE INITIATED THROUGH CENTERPOINT ENERGY'S PROJECT COORDINATION PROCESS BY VISITING: HTTP://WWW.CENTERPOINTENERGY.COM/EN-US/PAGES/MUGFORM.ASPX

NO.	DATE	REVISION	APP.

MBROH 20 ENGINEERING
11757 KATY FWY,
SUITE 625
HOUSTON, TX 77077
713-468-2545

SURVEYED BY:
FB NO.

THESE DOCUMENTS ARE FOR INTERIM REVIEW AND ARE NOT INTENDED FOR CONSTRUCTION, BIDDING, OR PERMIT PURPOSES.
HANS POURES
TEXAS P.E. NO. 131630
DATE: 11/5/2026

CITY OF HOUSTON
HOUSTON PUBLIC WORKS

WHITE OAKS WWTP IMPROVEMENTS

ELECTRICAL

STANDARD DETAILS VIII

WBS NUMBER	FOR CITY OF HOUSTON USE ONLY
R-000265-0158-3	
DRAWING SCALE	
NONE	
CITY OF HOUSTON PM	
SHAHIDUR RAHMAN, PE	
SHEET NO. 171 OF 189	

E-46

PLOTTED: 05/11/2026
PLOT STYLE: ----
FILE PATH: P:\Projects\0106 – City Of Houston\20031 – White Oak WWTP Phase II\4.0 CAD\4.2 Electrical\E-46 STANDARD DETAILS VIII.dwg

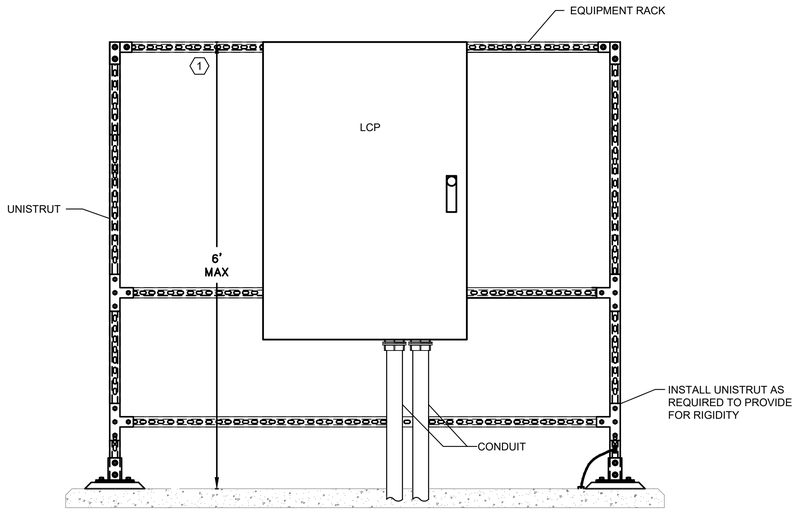

STANDARD UNISTRUT & PANEL MOUNT DETAIL

DETAIL A
SCALE: (NTS)

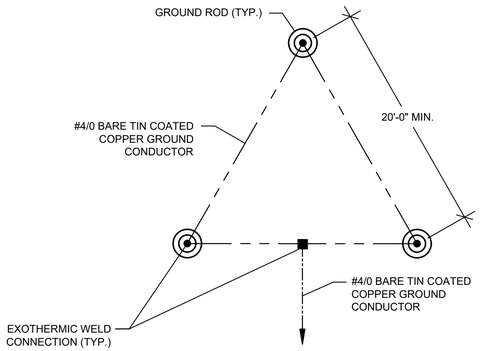

GROUNDING TRIAD

DETAIL B
SCALE: (NTS)

NOTES BY SYMBOL "⟨#⟩":

⟨1⟩ TOP OF PANEL BOARD NOT TO EXCEED 6' ABOVE FINISH FLOOR OR ABOVE FINISH GRADE

NO.	DATE	REVISION	APP.

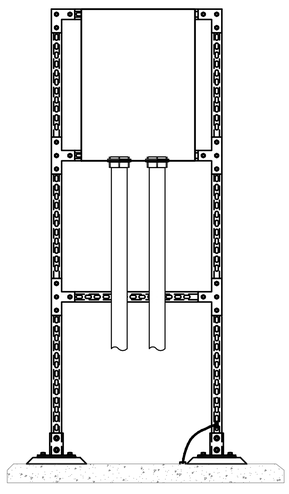

DETAIL C
SCALE: (NTS)

MBROH 20 ENGINEERING
11757 KATY FWY,
SUITE 625
HOUSTON, TX 77077
713-468-2545

SURVEYED BY:
FB NO.

THESE DOCUMENTS ARE FOR INTERIM REVIEW AND ARE NOT INTENDED FOR CONSTRUCTION, BIDDING, OR PERMIT PURPOSES.
HANS POURES
TEXAS P.E. NO. 131630
DATE: 11/5/2026

CITY OF HOUSTON
HOUSTON PUBLIC WORKS

WHITE OAKS WWTP IMPROVEMENTS

ELECTRICAL

STANDARD DETAILS IX

WBS NUMBER	FOR CITY OF HOUSTON USE ONLY
R-000265-0158-3	
DRAWING SCALE	
NONE	
CITY OF HOUSTON PM	
SHAHIDUR RAHMAN, PE	
SHEET NO. 172 OF 189	

E-47

PLOTTED: 05/11/2026
PLOT STYLE: ----
FILE PATH: P:\Projects\0106 - City Of Houston\20031 - White Oak WWTP Phase II\4.0 CAD\4.2 Electrical\E-47 STANDARD DETAILS IX.dwg

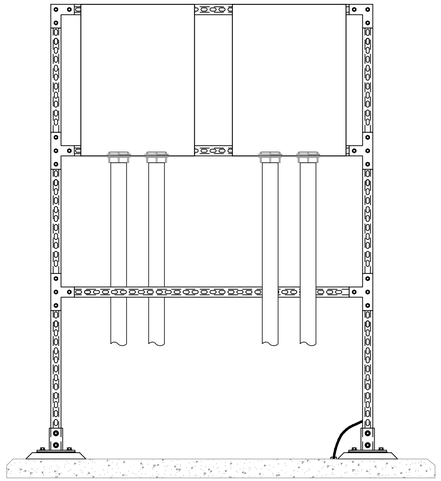

DETAIL A
SCALE: (NTS)
- 1

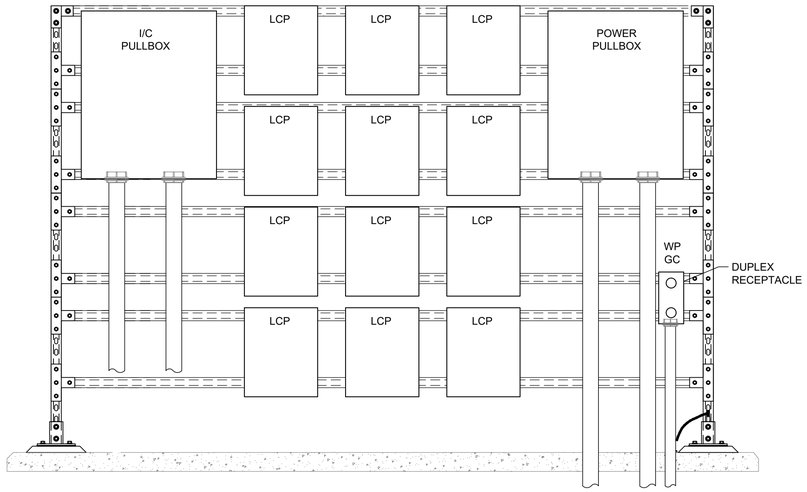

DETAIL B
SCALE: (NTS)
- 1

NOTES BY SYMBOL "#":

1 TOP OF PANEL BOARD NOT TO EXCEED 6' ABOVE FINISH FLOOR OR ABOVE FINISH GRADE

NO.	DATE	REVISION	APP.

MBROH 20 ENGINEERING
11757 KATY FWY,
SUITE 625
HOUSTON, TX 77077
713-468-2545

SURVEYED BY:
FB NO.

THESE DOCUMENTS ARE FOR INTERIM REVIEW AND ARE NOT INTENDED FOR CONSTRUCTION, BIDDING, OR PERMIT PURPOSES.
HANS POURES
TEXAS P.E. NO. 131630
DATE: 11/5/2026

CITY OF HOUSTON
HOUSTON PUBLIC WORKS

WHITE OAKS WWTP IMPROVEMENTS

ELECTRICAL

STANDARD DETAILS X

WBS NUMBER	FOR CITY OF HOUSTON USE ONLY
R-000265-0158-3	
DRAWING SCALE	
NONE	
CITY OF HOUSTON PM	
SHAHIDUR RAHMAN, PE	
SHEET NO. 173 OF 189	

E-48

PLOTTED: 05/11/2026
PLOT STYLE: ----
FILE PATH: P:\Projects\0106 - City Of Houston\20031 - White Oak WWTP Phase II\4.0 CAD\4.2 Electrical\E-48 STANDARD DETAILS X.dwg

PLOTTED: 06/11/2026
PLOT STYLE: ----
FILE PATH: P:\Projects\0106 - City Of Houston\20031 - White Oak WWTP Phase II\4.0 CAD\4.3 I&C\I-01 GENERAL NOTES & LEGEND.dwg

GENERAL INSTRUMENT OR FUNCTION SYMBOLS

	PRIMARY LOCATION NORMALLY ACCESSIBLE TO OPERATOR	FIELD MOUNTED	AUXILIARY LOCATION NORMALLY ACCESSIBLE TO OPERATOR **
DISCRETE INSTRUMENTS	◯	◯	◯
SHARED DISPLAY, SHARED CONTROL	▭	◯	▭
COMPUTER FUNCTION	⬡	⬡	⬡
PROGRAMMABLE LOGIC CONTROL	◇	◇	◇

** NORMALLY INACCESSIBLE OR BEHIND-THE-PANEL DEVICES OR FUNCTIONS MAY BE DEPICTED BY USING THE SAME SYMBOL BUT WITH DASHED HORIZONTAL BARS, i.e.:

BW — THIS SYMBOL REFERS TO THE FILTER BACK WASH LOGIC SEQUENCE AS DESCRIBED IN SPECIFICATIONS SECTION 13300.

- INSTRUMENTS SHARING COMMON HOUSING
- NEW EQUIPMENT
- EXISTING EQUIPMENT
- FUTURE EQUIPMENT

I2 — CONTROL INTERLOCK FUNCTION, SOFTWARE OR HARDWIRED. SEE DESCRIPTION PROVIDED, ELECTRICAL SCHEMATIC, AND/OR SYSTEM SPECIFICATIONS FOR SPECIFIC FUNCTION.
DETAIL NUMBER IF USED

△ INPUT ▽ OUTPUT — DIGITAL SYSTEM I/O INTERFACE. DIRECTION OF TRIANGLE DENOTES WHETHER INPUT OR OUTPUT

▲ INPUT ▼ OUTPUT — ANALOG SYSTEM I/O INTERFACE. DIRECTION OF TRIANGLE DENOTES WHETHER INPUT OR OUTPUT

TYPICAL TAG NUMBERS & DESIGNATION

1234 / C2 — TYPICAL LOOP NUMBER
ADDITIONAL INSTRUMENT IDENTIFICATION SEE FUNCTION SYMBOLS & ABBREVIATIONS
AE *A — WHEN USED, LETTER DISTINGUISHES BETWEEN MULTIPLE, SIMILAR DEVICES IN THE SAME INSTRUMENT LOOP.
WHEN USED, NUMBER DENOTES DEVICES IN IDENTICAL DUPLICATE SYSTEMS.

GENERAL NOTES

1. THIS IS A GENERAL LEGEND SHEET, SOME SYMBOLS AND ABBREVIATIONS MAY NOT APPLY TO THIS SPECIFIC PROJECT.
2. THIS LEGEND APPLIES TO INSTRUMENTATION DIAGRAMS ONLY AND MAY DIFFER FROM LEGENDS FOR OTHER SHEETS.
3. IN GENERAL THIS LEGEND SHEET AND THE INSTRUMENTATION DIAGRAMS ARE BASED ON INSTRUMENT SOCIETY OF AMERICA, STANDARDS FOR PRACTICES FOR INSTRUMENTATION, STANDARD S5.1 SOME MODIFICATIONS, ADDITIONS AND ALTERATIONS HAVE BEEN MADE AS REQUIRED TO ACCOMMODATE THE PROJECT REQUIREMENTS.
4. SOME PROCESS ITEMS, SUCH AS EQUIPMENT ISOLATION VALVES, BYPASS LINES, etc., WHICH ARE NOT CRITICAL FOR AN UNDERSTANDING OF THE INSTRUMENTATION FUNCTIONS ARE NOT SHOWN ON THE INSTRUMENTATION SHEETS.
5. SEE ELECTRICAL SHEETS AND SPECIFICATIONS FOR ADDITIONAL CONTROL AND INTERLOCK REQUIREMENTS FOR EQUIPMENT NOT SHOWN OR NOT PROVIDED BY THE INSTRUMENTATION SUPPLIER.
6. IN THE EVENT OF DISCREPANCY BETWEEN THE PROCESS & INSTRUMENTATION DIAGRAMS AND THE LOOP DIAGRAMS, THE INFORMATION FROM THE LOOP DIAGRAMS SHALL BE USED.

HAND SWITCH ABBREVIATIONS

HOA - HAND/OFF/AUTO
LOC - LOCAL/OFF/COMPUTER
LOR - LOCAL/OFF/REMOTE
LOS - LOCKOUT STOP
OSC - OPEN/STOP/CLOSE
RSL - RAISE/STOP/LOWER
L/C - LOCAL/COMPUTER
L/R - LOCAL/REMOTE
O/C - OPEN/CLOSE
S/S - START/STOP
A/M - AUTO/MANUAL
H/C - HAND/COMPUTER

VALVE ACTUATOR SYMBOLS

AUTOMATIC POSITIONER
VALVE OR GATE ACTUATOR *
WITH DEFINED AS FOLLOWS:

P: AIR CYLINDER
S: SOLENOID
P/O:AIR/OIL CYLINDER
M: ELECTRIC MOTOR
H: HYDRAULIC CYLINDER
EH: ELECTROHYDRAULIC
Z: POSITIONER

FOR PRESSURE RELIEF OR SAFETY VALVES ONLY

OR NO SYMBOL — MANUALLY (HAND) OPERATED

PROCESS DEVICE SYMBOLS

- DIAPHRAGM SEAL
- ANNULAR TYPE DIAPHRAGM SEAL
- BUBBLER SYSTEM
- PRIMARY ELEMENT VENTURI TUBE
- PRIMARY ELEMENT MAGNETIC FLOWMETER
- PRIMARY ELEMENT INSERTION MAGNETIC FLOWMETER
- PRIMARY ELEMENT ULTRASONIC FLOWMETER
- PRIMARY ELEMENT PARTIAL FLUME OR TRAPEZOIDAL FLUME
- PRIMARY ELEMENT ORIFICE PLATE
- PRIMARY ELEMENT WEIR FLOWMETER
- PRIMARY ELEMENT TURBINE OR PROPELLER TYPE METER
- PRIMARY ELEMENT PILOT TUBE
- PRIMARY ELEMENT ROTAMETER
- PRIMARY ELEMENT ULTRASONIC LEVEL TRANSDUCER
- PRIMARY ELEMENT RADAR LEVEL TRANSDUCER
- FLOAT SWITCH
- DRAIN
- MANUAL VALVE OPERATOR
- CHEMICAL INJECTION POINT
- M — MOTOR - MAY BE ELECTRIC, HYDRAULIC OR PNEUMATIC ARROW DENOTES VARIABLE SPEED
- MASS FLOWMETER
- AIR BLOWER
- TFS — TEMPERATURE FLOW SWITCH
- AIR DIFFUSERS
- LOBE PUMP
- PROPORTIONING PUMP
- DISCHARGING PUMP

- REGULATED SIDE PRESSURE REGULATING VALVE SELF CONTAINED
- DIAPHRAGM VALVE
- BALL VALVE
- VALVE: GLOBE OR OTHER IN-LINE TYPE NOT OTHERWISE IDENTIFIED
- BUTTERFLY VALVE
- CHECK VALVE WITH FLOW DIRECTION AS INDICATED
- PLUG VALVE
- AIR RELEASE VALVE
- S — SOLENOID ACTUATED VALVE
- FLOW CONTROL GATE OR GATE VALVE
- CENTRIFUGAL BLOWER
- CENTRIFUGAL PUMP
- M — DIAPHRAGM PUMP AND MOTOR
- PROGRESSIVE CAVITY PUMP
- SUBMERSIBLE PUMP
- VERTICAL PUMP
- PD BLOWER
- AERATION BLOWER
- MIXER OR FLOCCULATOR
- BEACON LIGHT
- FLOW THERMAL
- RADAR LIQUID LEVEL WITH STILLING WELL
- PRESSURE SWITCH
- FLO DAR
- AIR FILTER

LINE SYMBOLS

- MAJOR PROCESS PIPING, FLOW CHANNEL OR DATA HIGHWAY WITH FLOW OR SIGNAL DIRECTION AS SHOWN.
- MINOR PROCESS PIPING WITH FLOW DIRECTION AS SHOWN
- MISCELLANEOUS PIPING WITH FLOW DIRECTION AS SHOWN
- FUTURE PIPING
- EXISTING PIPING (SHOWN LIGHTENED)
- ELECTRIC OR ELECTRONIC SIGNAL WITH SIGNAL DIRECTION AS SHOWN
- SOFTWARE SIGNAL LINK (RS485)
- HYDRAULIC SIGNAL
- PNEUMATIC SIGNAL
- CAPILLARY TUBE OR FILLED SYSTEM SIGNAL
- ELECTROMAGNETIC OR SONIC SIGNAL
- A — I-1 — PROCESS OR SIGNAL LINE CONTINUED AT / FROM ANOTHER LOCATION (MATCH LETTERS)
- CHEMICAL INJECTION POINT TO ANOTHER LOCATION
- NETWORK SIGNAL (CAT 6)
- COPPER WIRE CONNECTION
- POWER WIRES
- FO — FIBER OPTIC CABLE

GENERAL ABBREVIATIONS

AFD	ADJUSTABLE FREQUENCY DRIVE
AI	ANALOG INPUT
AO	ANALOG OUTPUT
ATC	AUTOMATIC TRANSFER CONTROLER
ATS	AUTOMATIC TRANSFER SWITCH
AS	AIR SUPPLY
COND	CONDUCTIVITY
COMP	COMPUTER
CP	CONTROL PANEL
CRC	CONTROL ROOM CONSOLE
CR	CHLORINE RESIDUAL
CTU	CENTRAL TELEMETRY UNIT DISTRIBUTED
DCU	CONTROL UNIT
DI	DIGITAL OR DISCRETE INPUT
DO	DISSOLVED OXYGEN OR DIGITAL OUTPUT
DPU	DISTRIBUTIVE PROCESSING UNIT
EBWL	EMERGENCY BOTTOM WATER LEVEL
ES	ELECTRIC SUPPLY
ETWL	EMERGENCY TOP WATER LEVEL
FC	FAIL CLOSED
FLP	FAIL LAST POSITION
FO	FAIL OPEN
FOPP	FIBER OPTIC PATCH PANEL
HMI	HUMAN MACHINE INTERFACE
IO	INPUT OUTPUT
ISS	INSTRUMENT SYSTEM SUPPLIER
LPC	LOCAL CONTROL PANEL
LPU	LOCAL PROCESSING UNIT
MC	MOTOR CONTROLLER
MPU	MOTOR PROTECTION UNIT
NC	NORMALLY CLOSED
NIM	NETWORK INTERFACE MODULE
NO	NORMALLY OPEN
MCP	MANUFACTURE CONTROL PANEL
MMI	MAN MACHINE INTERFACE
OIT	OPERATOR INTERFACE TERMINAL
pH	HYDROGEN ION CONCENTRATION
OL	OVERLOAD
OWS	OPERATOR WORKSTATION
PLC	PROGRAMMABLE LOGIC CONTROLLER
POLM	POLYMER
RBC	REMOTE BASE CONTROLLER
RIO	REMOTE INPUT OUTPUT
RTU	REMOTE TERMINAL UNIT
RVSS	REDUCED VOLTAGE SOFT STARTER
TURB	TURBIDITY
UPS	UNINTERRUPTIBLE POWER SUPPLY
VIB	VIBRATION
VSD	VARIABLE SPEED DRIVE

FUNCTION SYMBOLS AND ABBREVIATIONS

|<	PROPORTIONAL GAIN OR ATTENUATE (INPUT:OUTPUT)
- |<	REVERSE PROPORTIONAL GAIN OR ATTENUATE (INPUT:OUTPUT)
Σ	SUMMING
$\Sigma/_n$	AVERAGING
△	SUBTRACTING
√‾	EXTRACT SQUARE ROOT
:	DIVIDE
X	MULTIPLY
S	INTEGRATE
+	BIAS POSITIVE
-	BIAS NEGATIVE
F (x)	NONLINEAR OR UNSPECIFIED FUNCTION
>	HIGH SELECT
<	LOW SELECT
⊦	HIGH LIMIT
⊣	LOW LIMIT
/	SIGNAL TRANSDUCER OR CONVERTER (INPUT/OUTPUT) DEFINED AS FOLLOWS:

* E - VOLTAGE
I - CURRENT
P - PNEUMATIC
PD - PULSE DURATION
H - HYDRAULIC
O - ELECTROMAGNETIC, SONIC
R - RESISTANCE (ELECTRIC)

MEANINGS OF IDENTIFICATION LETTERS

THIS TABLE APPLIES ONLY TO THE FUNCTIONAL IDENTIFICATION OF INSTRUMENTS

	FIRST LETTER		SUCCEEDING LETTERS		
	MEASURED OR INITIATING VARIABLE	MODIFIER	READOUT OR PASSIVE FUNCTION	OUTPUT FUNCTION	MODIFIER
A	ANALYSIS		ALARM		
B	BURNER, COMBUSTION				
C	CONDUCTIVITY			CONTROL	
D	DENSITY (MASS) OR SPECIFIC GRAVITY	DIFFERENTIAL			
E	VOLTAGE (EMF)		PRIMARY ELEMENT		
F	FLOW RATE	RATIO (FRACTION)			
G	USER'S CHOICE		GLASS VIEWING DEVICE		
H	HAND				HIGH OR OPEN
I	CURRENT (ELECTRICAL)		INDICATE		
J	POWER	SCAN			
K	TIME OR TIME SCHEDULE	TIME RATE OF CHANGE		CONTROL STATION	
L	LEVEL		LIGHT (PILOT)		LOW OR CLOSED
M	MOTION	MOMENTARY			MIDDLE OR INTERMEDIATE
N	TORQUE		USER'S CHOICE		USER'S CHOICE
O	USER'S CHOICE		ORIFICE (RESTRICTION)		
P	PRESSURE OR VACUUM		POINT (TEST CONNECTION)		
Q	QUANTITY	INTEGRATE OR TOTALIZE			
R	RADIATION		RECORD		
S	SPEED OR FREQUENCY	SAFETY		SWITCH	
T	TEMPERATURE			TRANSMIT	
U	MULTIVARIABLE		MULTIFUNCTION	MULTIFUNCTION	MULTIFUNCTION
V	VIBRATION			VALVE, DAMPER OR LOUVER	
W	WEIGHT OR FORCE		WELL		UNCLASSIFIED
X	UNCLASSIFIED	X AXIS	UNCLASSIFIED	UNCLASSIFIED	UNCLASSIFIED
Y	EVENT, STATE OR PRESENCE	Y AXIS		RELAY, COMPUTE, CONVERT	
Z	POSITION, DIMENSION	Z AXIS		DRIVE, ACTUATE OR UNCLASSIFIED CONTROL ELEMENT	

FCP - FILTER CONTROL PANEL
FCS - FILTER CONTROL STATION
HMI - HUMAN MACHINE INTERFACE
LCS - LOCAL CONTROL STATION
OWS - LIMIT SWITCH - VALVE POSITION OPEN
RIO - REMOTE INPUT/OUTPUT

LOOPS LEGEND

FC	FLOW SETPOINT
FI	FLOW INDICATION
LI	LEVEL INDICATION
MC	MOTOR COMMAND (START/STOP)
MD	RUNNING FORWARD INDICATION
MF	MOTOR FAILURE
MH	MOISTURE HIGH
MN	MOTOR RUNNING STATUS
MP	STOPPED STATUS
MPC	STOP COMMAND
MR	RUNNING REVERSE INDICATION
PDI	PRESSURE DIFFERENTIAL INDICATION
PI	PRESSURE INDICATION
SC	SPEED COMMAND
SI	SPEED INDICATION
TSH	HIGH TEMP. STATUS
YF	FAILURE INDICATION
YA	ALARM INDICATION
YN	REMOTE STATUS
YQ	OVER TORQUE STATUS
Z I	POSITION INDICATION
ZC	POSITION SET POINT
ZCC	CLOSE COMMAND
ZOC	OPEN COMMAND
ZNC	OPEN / CLOSE COMMAND
ZPC	POSITION STOP COMMAND
ZS	DOOR LIMIT SWITCH POSITION STATUS
ZSC	CLOSED STATUS
ZSO	OPEN STATUS

NO.	DATE	REVISION	APP.

MBROH 20 ENGINEERING
11757 KATY FWY,
SUITE 625
HOUSTON, TX 77077
713-468-2545

SURVEYED BY:
FB NO.

THESE DOCUMENTS ARE FOR INTERIM REVIEW AND ARE NOT INTENDED FOR CONSTRUCTION, BIDDING, OR PERMIT PURPOSES.
HANS POURES
TEXAS P.E. NO. 131630
DATE: 11/6/2026

CITY OF HOUSTON
HOUSTON PUBLIC WORKS

WHITE OAKS WWTP IMPROVEMENTS

INSTRUMENTATION
GENERAL NOTES & LEGEND

WBS NUMBER	FOR CITY OF HOUSTON USE ONLY
R-000265-0158-3	
DRAWING SCALE	
NONE	
CITY OF HOUSTON PM	
SHAHIDUR RAHMAN, PE	

PLOTTED: 06/11/2026
PLOT STYLE: ----
FILE PATH: P:\Projects\0106 - City Of Houston\20031 - White Oak WWTP Phase II\4.0 CAD\4.3 I&C\I-02 EXISTING SYSTEM ARCHITECTURE.dwg

NO.	DATE	REVISION	APP.

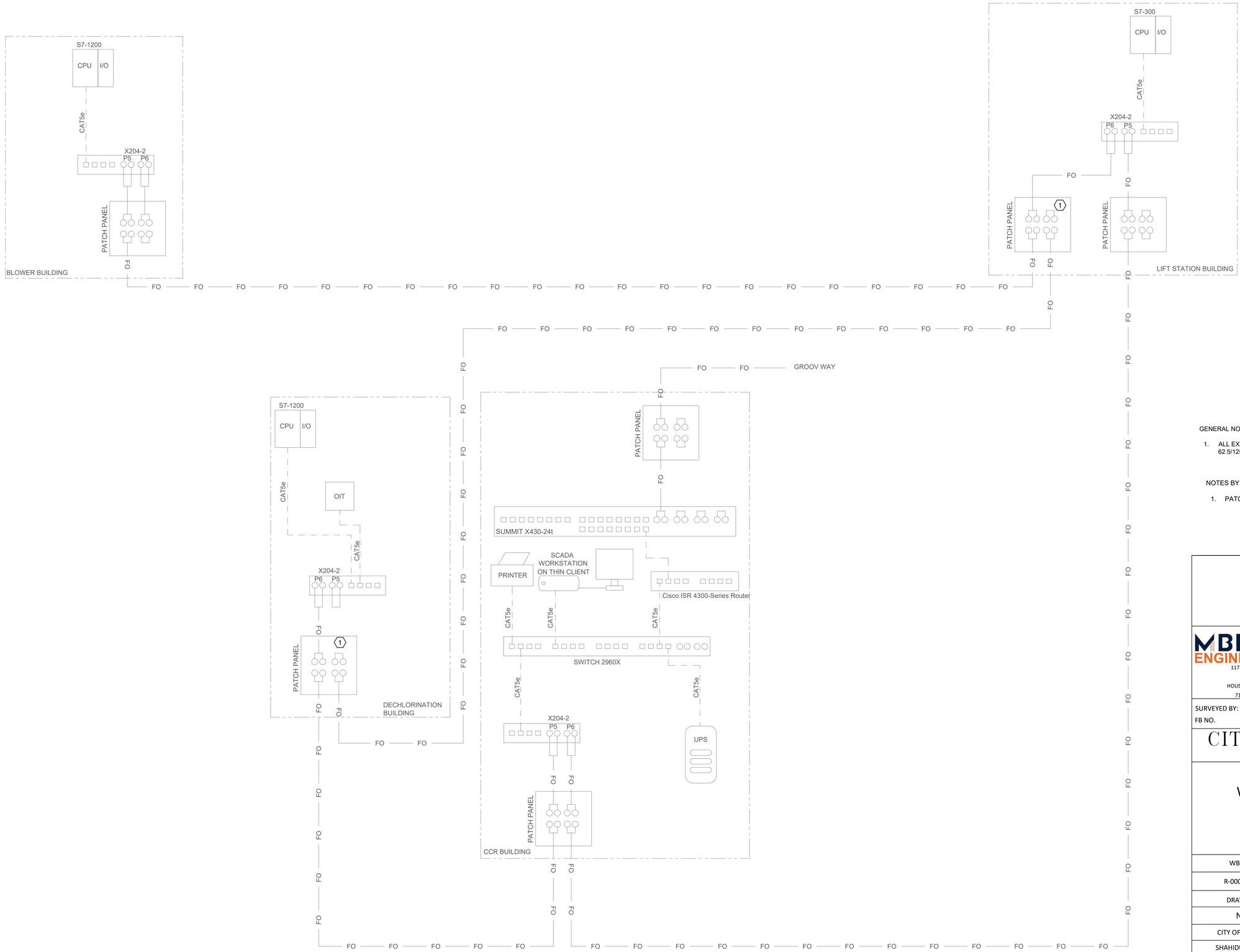

GENERAL NOTES:-

1. ALL EXISTING FIBER OPTIC CABLES ARE MULTIMODE 62.5/125 µM.

NOTES BY SYMBOL "#"

1. PATCH PANEL CABLE NOT CONNECTED TO SWITCH

MBROH ENGINEERING 20
11757 KATY FWY,
SUITE 625
HOUSTON, TX 77077
713-468-2545

SURVEYED BY:
FB NO.

THESE DOCUMENTS ARE FOR INTERIM REVIEW AND ARE NOT INTENDED FOR CONSTRUCTION, BIDDING, OR PERMIT PURPOSES.
HANS POURES
TEXAS P.E. NO. 131630
DATE: 11/5/2026

CITY OF HOUSTON
HOUSTON PUBLIC WORKS

WHITE OAKS WWTP IMPROVEMENTS

INSTRUMENTATION
EXISTING SYSTEM ARCHITECTURE

WBS NUMBER	FOR CITY OF HOUSTON USE ONLY
R-000265-0158-3	
DRAWING SCALE	
NONE	
CITY OF HOUSTON PM	
SHAHIDUR RAHMAN, PE	
SHEET NO. 175 OF 189	

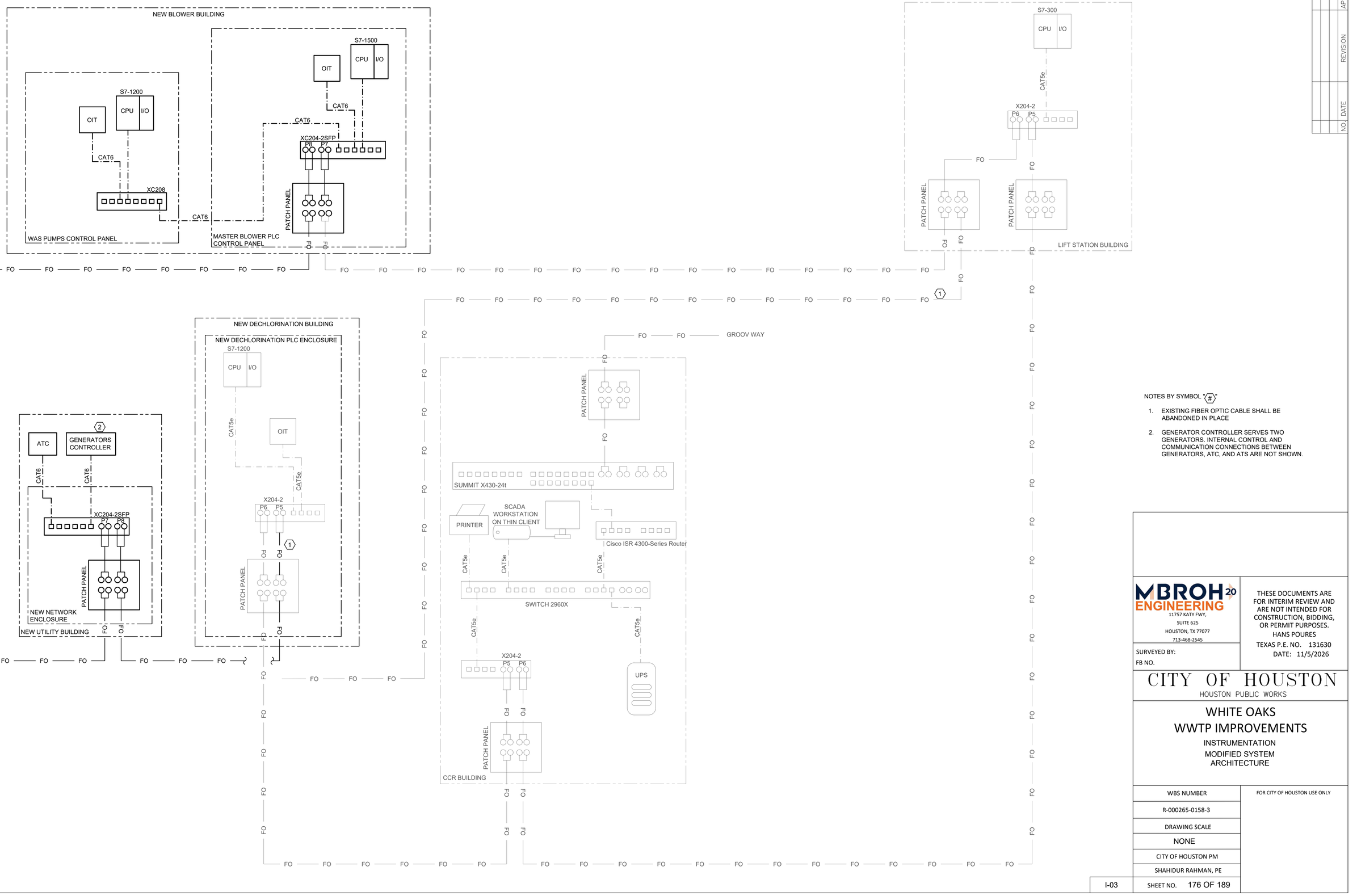

NOTES BY SYMBOL "⟨#⟩"

1. EXISTING FIBER OPTIC CABLE SHALL BE ABANDONED IN PLACE
2. GENERATOR CONTROLLER SERVES TWO GENERATORS. INTERNAL CONTROL AND COMMUNICATION CONNECTIONS BETWEEN GENERATORS, ATC, AND ATS ARE NOT SHOWN.

NO.	DATE	REVISION	APP.

MBROH ENGINEERING 20
11757 KATY FWY,
SUITE 625
HOUSTON, TX 77077
713-468-2545

SURVEYED BY:
FB NO.

THESE DOCUMENTS ARE FOR INTERIM REVIEW AND ARE NOT INTENDED FOR CONSTRUCTION, BIDDING, OR PERMIT PURPOSES.
HANS POURES
TEXAS P.E. NO. 131630
DATE: 11/5/2026

CITY OF HOUSTON
HOUSTON PUBLIC WORKS

WHITE OAKS WWTP IMPROVEMENTS

INSTRUMENTATION
MODIFIED SYSTEM ARCHITECTURE

WBS NUMBER	FOR CITY OF HOUSTON USE ONLY
R-000265-0158-3	
DRAWING SCALE	
NONE	
CITY OF HOUSTON PM	
SHAHIDUR RAHMAN, PE	

I-03 SHEET NO. 176 OF 189

PLOTTED: 06/11/2026
PLOT STYLE: ----
FILE PATH: P:\Projects\0106 - City Of Houston\20031 - White Oak WWTP Phase II\4.0 CAD\4.3 I&C\I-03 MODIFIED SYSTEM ARCHITECTURE.dwg

PLOTTED: 06/11/2026

PLOT STYLE: ----

FILE PATH: P:\Projects\0106 - City Of Houston\20031 - White Oak WWTP Phase II\4.0 CAD\4.3 I&C\I-04 CHEMICAL STORAGE AND DECHLORINATION BUILDING.dwg

NO.	DATE	REVISION	APP.

HMI

TANK 1 LEVEL INDICATION — LI 8001
TANK 2 LEVEL INDICATION — LI 8002
TANK 3 LEVEL INDICATION — LI 8003
TANK 4 LEVEL INDICATION — LI 8004

P-1 (1)
FAIL — MF 8001
RUNNING — MN 8001
START/STOP — HS 8001
SPEED COMMAND — SC 8001
FLOW — FI 8001

P-3 (1)
FAIL — MF 8003
RUNNING — MN 8003
START/STOP — HS 8003
SPEED COMMAND — SC 8003
FLOW — FI 8003

PRE CHLORINE ANALYZER — AI 8001
POST CHLORINE ANALYZER — AI 8002
MIX CHLORINE ANALYZER — AI 8003

EFFLUENT FLOW — FI 8005
RUNNING — MN 8005
START/STOP — HS 8005

LPC

1 2 3 4 5 6 7 (2) 8 9 10 11 11 12 12 13 13 14 15 16

AIT 8001 AIT 8002 AIT 8003

FIELD

FROM AERATION BASINS

2"-NHS-PVC-2

2"-PVC-IT

1

LI 8001
LT 8001
LE 8001
INSECT SCREEN
2"-NHS-PVC-2
4"-NHS-PVC-2

2

LI 8002
LT 8002
LE 8002
INSECT SCREEN
4"-NHS-PVC-2
24"

SIGHT LEVEL GAUGE (TYP)
LG 8001

SODIUM HYPOCHLORITE STORAGE TANK TK-8001

3"-NHS-PVC-2
3'-NHS-PVC-2
m

SODIUM HYPOCHLORITE STORAGE TANK TK-8002
MANWAY (TYP)
24"
LG 8002

2"-NHS-PVC-2
4"
TO DRAIN

FROM AERATION BASINS

2"-NHS-PVC-2

2"-PVC-IT

3

LI 8003
LT 8003
LE 8003
INSECT SCREEN
2"-NHS-PVC-2
4"-NHS-PVC-2

4

LI 8004
LT 8004
LE 8004
INSECT SCREEN
4"-NHS-PVC-2
24"

SIGHT LEVEL GAUGE (TYP)
LG 8001

SODIUM BISULFITE STORAGE TANK TK-8003

3"-NHS-PVC-2
3'-NHS-PVC-2
m

SODIUM BISULFITE STORAGE TANK TK-8004
MANWAY (TYP)
24"
LG 8002

2"-NHS-PVC-2
4"
TO DRAIN

DECHLORINATION BUILDING

2"-PVC

5 6
H/O/A — HS 8001
SIC 8001 — SPEED CMD
(1)

1/2"-PVC 3/8" PR
PCV 8001
1"-PVC 3/8" 120V AC 3/8" 3/4"-PVC
(NaOCL) METER PUMP P-1

1/2"-PVC 3/8" PR
PCV 8002
1"-PVC 3/8" (1) 120V AC 3/8" 3/4"-PVC
(NaOCL) METER PUMP P-2

3/4"-PVC BYPASS

8 9
H/O/A — HS 8003
SIC 8003 — SPEED CMD
(1)

1/2"-PVC 3/8" PR
PCV 8003
1"-PVC 3/8" 120V AC 3/8" 3/4"-PVC
($NaHSO_3$) METER PUMP P-3

1/2"-PVC 3/8" PR
PCV 8004
1"-PVC 3/8" (1) 120V AC 3/8" 3/4"-PVC
($NaHSO_3$) METER PUMP P-4

3/4"-PVC BYPASS

7
FIT 8001
FE 8001
M

10
FIT 8003
FE 8003
M

15 16
FAIL — MF 8005
RUNNING — MN 8005
H/O/A — HS 8005

14
FIT 8005
FE 8005
M

M

TO WHITE OAK BAYOU

NOTES BY SYMBOL: "(#)"

1. TYPICAL FOR P-1, P-2, P-3, AND P-4.
2. NOT WIRED IN THE EXISTING SYSTEM

MBROH ENGINEERING 20
11757 KATY FWY,
SUITE 625
HOUSTON, TX 77077
713-468-2545

SURVEYED BY:
FB NO.

THESE DOCUMENTS ARE FOR INTERIM REVIEW AND ARE NOT INTENDED FOR CONSTRUCTION, BIDDING, OR PERMIT PURPOSES.
HANS POURES
TEXAS P.E. NO. 131630
DATE: 10/19/2026

CITY OF HOUSTON
HOUSTON PUBLIC WORKS

WHITE OAKS WWTP IMPROVEMENTS

INSTRUMENTATION
CHEMICAL STORAGE AND DECHLORINATION BUILDING

WBS NUMBER	FOR CITY OF HOUSTON USE ONLY
R-000265-0158-3	
DRAWING SCALE	
NONE	
CITY OF HOUSTON PM	
SHAHIDUR RAHMAN, PE	
I-04	SHEET NO. 177 OF 189

PLOTTED: 06/11/2026
PLOT STYLE: ----
FILE PATH: P:\Projects\0106 - City Of Houston\20031 - White Oak WWTP Phase II\4.0 CAD\4.3 I&C\I-05 EMERGENCY GENERATOR I.dwg

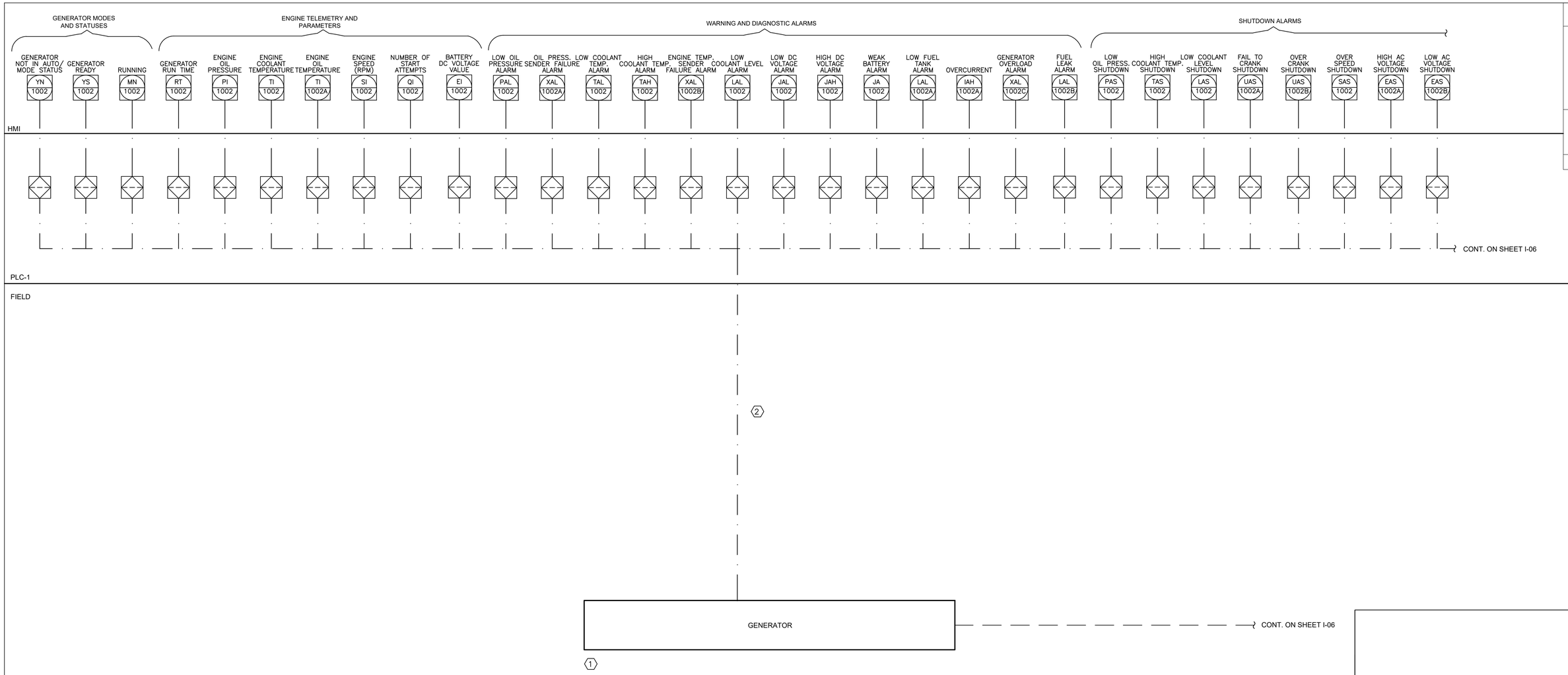

NOTES BY SYMBOL "⬡":

1. GENERATOR VENDOR SHALL SUPPLY A MODBUS TCP/IP CARD TO COMMUNICATE WITH PLC-1.
2. MODBUS TCP/IP PROTOCAL

NO.	DATE	REVISION	APP.

MBROH ENGINEERING
11757 KATY FWY,
SUITE 625
HOUSTON, TX 77077
713-468-2545

SURVEYED BY:
FB NO.

THESE DOCUMENTS ARE FOR INTERIM REVIEW AND ARE NOT INTENDED FOR CONSTRUCTION, BIDDING, OR PERMIT PURPOSES.
HANS POURES
TEXAS P.E. NO. 131630
DATE: 11/5/2026

CITY OF HOUSTON
HOUSTON PUBLIC WORKS

WHITE OAKS WWTP IMPROVEMENTS

INSTRUMENTATION

EMERGENCY GENERATOR I

WBS NUMBER	FOR CITY OF HOUSTON USE ONLY
R-000265-0158-3	
DRAWING SCALE	
NONE	
CITY OF HOUSTON PM	
SHAHIDUR RAHMAN, PE	

PLOTTED: 06/11/2026
PLOT STYLE: ----
FILE PATH: P:\Projects\0106 - City Of Houston\20031 - White Oak WWTP Phase II\4.0 CAD\4.3 I&C\I-06 EMERGENCY GENERATOR II.dwg

NO.	DATE	REVISION	APP.

HMI

PLC-1

UNDER FREQUENCY SHUTDOWN	OVER CURRENT SHUTDOWN	SHORT CIRCUIT SHUTDOWN	E–STOP	ON UTILITY POWER	ON GENERATOR POWER	NORMAL SOURCE (UTILITY) AVAILABLE	EMERGENCY SOURCE (UTILITY) AVAILABLE	ATS NOT IN AUTO	ATS FAIL TO TRANSFER COMMON ALARM	ATS COMMUNICATION FAILURE	UTILITY PHASE VOLTAGE	GENERATOR PHASE VOLTAGE	POWER FREQUENCY (HZ)	ATS TRANSFER COUNTER
FAS 1002	IAS 1002	XAS 1002	YAS 1002	JN 1003	JF 1003	EN 1003	EE 1003	YN 1003	YF 1003	ZA 1003	EI 1003A	EI 1003B	FI 1003	QI 1003
1	2	3	4	5	6	7	8	9	10	11				

CONT. FROM SHEET I-05

UPS BATTERY LOW	UPS FAIL	UPS ON BATTERY	INPUT AC POWER LOSS	UPS OVERLOAD	BYPAS ACTIVE	REPLACE BATTERY/ TEST FAIL	UPS COMMUNICATION FAILURE	UPS INPUT/ OUTPUT AC VOLTAGE	UPS DC BATTERY VOLTAGE	BATTERY RUNTIME REMAINING (MINUTES)
JA 1002A	JF 1002	JN 1002	EN 1002	IAH 1002B	YS 1002	JAH 1002A	ZA 1002	EI 1002A	EI 1002B	QI 1002A

UPS

FIELD

1 2 3 4 5 6 7 8 9 10 11

AUTOMATIC TRANSFER SWITCH CONTROLLER (ATC)

⬡1 ⬡2

CONT. FROM SHEET I-05

NOTES BY SYMBOL "⬡":

1. THE START/STOP SIGNAL COMES FROM THE ATS TO THE GENERATOR.
2. THE GENERATOR READY SIGNAL GOES TO THE ATS.

MBROH 20 ENGINEERING
11757 KATY FWY,
SUITE 625
HOUSTON, TX 77077
713-468-2545

SURVEYED BY:
FB NO.

THESE DOCUMENTS ARE FOR INTERIM REVIEW AND ARE NOT INTENDED FOR CONSTRUCTION, BIDDING, OR PERMIT PURPOSES.
HANS POURES
TEXAS P.E. NO. 131630
DATE: 11/5/2026

CITY OF HOUSTON
HOUSTON PUBLIC WORKS

WHITE OAKS WWTP IMPROVEMENTS

INSTRUMENTATION

EMERGENCY GENERATOR II

WBS NUMBER	FOR CITY OF HOUSTON USE ONLY
R-000265-0158-3	
DRAWING SCALE	
NONE	
CITY OF HOUSTON PM	
SHAHIDUR RAHMAN, PE	

PLOTTED: 06/11/2026
PLOT STYLE: ----
FILE PATH: P:\Projects\0106 - City Of Houston\20031 - White Oak WWTP Phase II\4.0 CAD\4.3 I&C\I-07 AERATION BLOWERS P&ID.dwg

NO.	DATE	REVISION	APP.

BL-3001 (1)

SCADA

IN REMOTE YL 3001 | COMMON FAULT MF 3001 | MOTOR RUNNING MN 3001 | DISCH. PRESS. PI 3001 | FLOW IND. FI 3001 | INL. VLV POS. ZI 3001 | INLET TEMP. TI 3001C | DISCH. TEMP. TI 3001D | MCC-1 ROOM HIGH TEMP TIAH 3007 | HEADER PRESS. PI 3006 | HEADER FLOW FI 3006

BL-MASTER-PLC

IN REMOTE YL 3001 | START CMD (3) HS 3001 | COMMON FAULT MF 3001 | MOTOR RUNNING MN 3001 | FLOW SETPOINT FC 3001A | DISCH. PRESS. PI 3001 | FLOW IND. FI 3001 | INL. VLV POS. ZI 3001A | INLET TEMP. TI 3001C | DISCH. TEMP. TI 3001D | TIAH 3007 | PI 3006 | FI 3006

OIT | PLC — 120VAC

1 2 3 4 5 6 7 8 9 10 11 12 13

(WITHIN RVSS - BL-3001) (1) — 480VAC

TAH 3001AB BEARING TEMP | VAH 3001 HIGH VIB. | TAH 3001 MOTOR HIGH TEMP. | MF 3001A COMMON FAULT | HS 3001E RUN COMMAND | MN 3001A RUNNING

11 — 100°F TIT 3007 MCC-1 ROOM TEMP. TRANSMITTER

MCC -1

FIELD

GENERAL NOTES

VENDOR SHALL COORDINATE WITH PLANT PLC PROGRAMMER FOR PEER-TO-PEER MEMORY MAPPING ADDRESSES.

(#) KEY NOTES

1. TYPICAL FOR BL-3002, BL-3003, BL-3004 AND BL-3005.
2. SUPPLIED BY THE MANUFACTURER.
3. START/STOP NOT PERMITTED FROM SCADA
4. FCV-3001 THROUGH FCV-3005 ARE PART OF THE BLOWER PACKAGE. ACTUATOR POWER AND CONTROL SHALL BE COORDINATED WITH THE BLOWER MANUFACTURER.

(1) (2)

LCP-BLR3001

7 FI 3001 FLOW IND. | 5 FC 3001A FLOW SETPOINT | 8 ZI 3001A POS. | 9 ZC 3001A POS. SP | TI 3001C INL. TEMP. | TAH 3001A BEARING H TEMP. | VAH 3001 HIGH VIB. | 3 TAH 3001 MOTOR H TEMP. | MF 3001 COMMON FAULT | 10 TAH 3001B BEARING H TEMP. | 6 TI 3001D DISCH. TEMP. | 1 PI 3001 DISCH. PRESS. | 2 HS 3001A L/O/R | HS 3001B START PB | HS 3001C STOP PB | 4 HS 3001D E-STOP | MN 3001 RUNNING

OIT | PLC — 120VAC

(4) FCV-3001 ACTUATOR

ZSO 3001 OPEN STATUS | ZSC 3001 CLOSED STATUS | ZI 3001 POS. | ZCO 3001 OPEN CMD | ZCC 3001 CLOSE CMD

TIT 3001A | VIT 3001A | TE 3001A | VE 3001A | VIT 3001C | VE 3001C | TSH 3001 | VIT 3001B | VE 3001B | TIT 3001B | TE 3001B | TIT 3001C | TE 3001C | TIT 3001D | TE 3001D | PDIT 3001 | PIT 3001 | MOT-3001 (M)

AMBIENT AIR — FILTER — FLOW CONTROL VALVE FCV-3001 — AERATION BLOWER NO.1 BL-3001

FUTURE BLOWER (PHASE II) (1) (2)

TIT 3005A | VIT 3005A | TE 3005A | VE 3005A | VIT 3005C | VE 3005C | TIT 3005C | TE 3005C | TSH 3005 | VIT 3005B | VE 3005B | TIT 3005B | TE 3005B | TIT 3005D | TE 3005D | PDIT 3005 | PIT 3005 | MOT-3005 (M)

AMBIENT AIR — FILTER — FLOW CONTROL VALVE FCV-3005 — AERATION BLOWER NO.5 BL-3005

(1) (2)

TIT 3004A | VIT 3004A | TE 3004A | VE 3004A | VIT 3004C | VE 3004C | TSH 3004 | VIT 3004B | VE 3004B | TIT 3004B | TE 3004B | TIT 3004C | TE 3004C | TIT 3004D | TE 3004D | PDIT 3004 | (2) | PIT 3004 | MOT-3004 (M)

AMBIENT AIR — FILTER — FLOW CONTROL VALVE FCV-3004 — AERATION BLOWER NO.4 BL-3004

(1) (2)

TIT 3003A | VIT 3003A | TE 3003A | VE 3003A | VIT 3003C | VE 3003C | TSH 3003 | VIT 3003B | VE 3003B | TIT 3003B | TE 3003B | TIT 3003C | TE 3003C | TIT 3003D | TE 3003D | PDIT 3003 | (2) | PIT 3003 | MOT-3003 (M)

AMBIENT AIR — FILTER — FLOW CONTROL VALVE FCV-3003 — AERATION BLOWER NO.3 BL-3003

(1) (2)

TIT 3002A | VIT 3002A | TE 3002A | VE 3002A | VIT 3002C | VE 3002C | TSH 3002 | VIT 3002B | VE 3002B | TIT 3002B | TE 3002B | TIT 3002C | TE 3002C | TIT 3002D | TE 3002D | PDIT 3002 | (2) | PIT 3002 | MOT-3002 (M)

AMBIENT AIR — FILTER — FLOW CONTROL VALVE FCV-3002 — AERATION BLOWER NO.2 BL-3002

12 PIT 3006 | 13 FIT 3006 — 120V

FE 3006 — TO PLANT AIR HEADER XX-X-XX

MBROH ENGINEERING 20
11757 KATY FWY, SUITE 625
HOUSTON, TX 77077
713-468-2545

SURVEYED BY:
FB NO.

THESE DOCUMENTS ARE FOR INTERIM REVIEW AND ARE NOT INTENDED FOR CONSTRUCTION, BIDDING, OR PERMIT PURPOSES.
HANS POURES
TEXAS P.E. NO. 131630
DATE: 11/5/2026

CITY OF HOUSTON
HOUSTON PUBLIC WORKS

WHITE OAKS WWTP IMPROVEMENTS

INSTRUMENTATION
AERATION BLOWERS
P&ID

WBS NUMBER	FOR CITY OF HOUSTON USE ONLY
R-000265-0158-3	
DRAWING SCALE	
NONE	
CITY OF HOUSTON PM	
SHAHIDUR RAHMAN, PE	
I-07	SHEET NO. 180 OF 189

PLOTTED: 06/11/2026
PLOT STYLE: ----
FILE PATH: P:\Projects\0106 - City Of Houston\20031 - White Oak WWTP Phase II\4.0 CAD\4.3 I&C\I-08 WAS PUMP STATION P&ID.dwg

NO.	DATE	REVISION	APP.

TYPICAL FOR PMP-6001 (1)

HMI

START/STOP HS 6001B | RUN TIME KI 6001 | COMMON FAULT UA 6001 | IN REMOTE YL 6001 | LEAK MAH 6001 | RUNNING MN 6001 | TEMP HIGH TAH 6001 | FLOW AL. LOW FAL 6001 | PRESS. AL. HIGH PAH 6001

TSS ANALYZER AIT 6001 | SUBMERSIBLE TSS ANALYZER AIT 6002 | FLOW FI 6001

WAS-MASTER-PLC

1 2 3 4 5 6 7 8 9 10 11

6001-FVNR MOTOR STARTER (1)

HS 6001A START | HS 6001B STOP | HS 6001C RESET | HS 8001D H/O/A | UA 6001 COMMON FAULT | YL 6001 IN REMOTE | MAH 6001 LEAK | MN 6001 RUNNING | TAH 6001 TEMP HIGH

480VAC

MCC

FIELD

LCP-6001 (2)

HS 6001E E-STOP | HS 6001F L/O/R | HS 6001G START | HS 6001H STOP

PI 6001 | MSH 6001 | TSH 6001 | M | MOT-6001 | PMP-6001 | FSL 6001 | PSH 6001 | PI 6001

10 AIT 6002 SUBMERSIBLE TSS ANALYZER

FROM AERATION BASIN WAS HEADER XX-X-XX — 10"-WAS-

PI 6002 | TSH 6002 (1) | M | MOT-6002 | PMP-6002 | FSL 6002 | PSH 6002 | PI 6002

9 AIT 6001 | 11 FIT 6001 120V | FE 6001 M | 8"-WAS- | TO NORTHWEST WWTP XX-X-XX

WAS PUMPS

KEY NOTES

(1) TYPICAL SIGNALS AND PANELS FOR PMP-6001, AND PMP-6002.

(2) IF L/O/R SELECTOR IN LOCAL, PRESS LC-START/STOP PUSH BUTTON TO RUN OR STOP PUMP. IF L/O/R SELECTOR IN REMOTE AND H/O/A SELECTOR IN HAND , PRESS STARTER START/STOP PUSH BUTTON TO RUN & STOP PUMP. IF L/O/R IN REMOTE AND H/O/A IN AUTO, USE HMI START/STOP SOFT PUSH BUTTON TO RUN & STOP PUMP.

MBROH ENGINEERING 20
11757 KATY FWY,
SUITE 625
HOUSTON, TX 77077
713-468-2545

SURVEYED BY:
FB NO.

THESE DOCUMENTS ARE FOR INTERIM REVIEW AND ARE NOT INTENDED FOR CONSTRUCTION, BIDDING, OR PERMIT PURPOSES.
HANS POURES
TEXAS P.E. NO. 131630
DATE: 11/5/2026

CITY OF HOUSTON
HOUSTON PUBLIC WORKS

WHITE OAKS WWTP IMPROVEMENTS

INSTRUMENTATION
WAS PUMP STATION
P&ID

WBS NUMBER	FOR CITY OF HOUSTON USE ONLY
R-000265-0158-3	
DRAWING SCALE	
NONE	
CITY OF HOUSTON PM	
SHAHIDUR RAHMAN, PE	

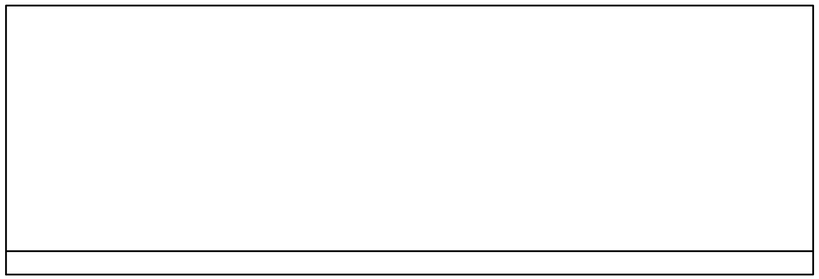

TOP-VIEW

NOTES BY SYMBOL "⬡":

DECHLORINATION PLC PANEL BOM:

ITEM	QTY.	DESCRIPTION	PART NO.	MANUFACTURER
1	1	NEW 36" X 36" X 12" SS WALLMOUNT ENCLOSURE - WM363612N4	8017602	RITTAL
2	2	NEW QUARTER TURN THUMB LATCH, SS	WMQTPLS6	RITTAL
3	1	NEW WALLMOUNT BRACKET SET, SS	WMSMB6	RITTAL
4	1	EXISTING TP900 COMFORT HMI PANEL	6AV2-124-0JC01-0AX0	SIEMENS

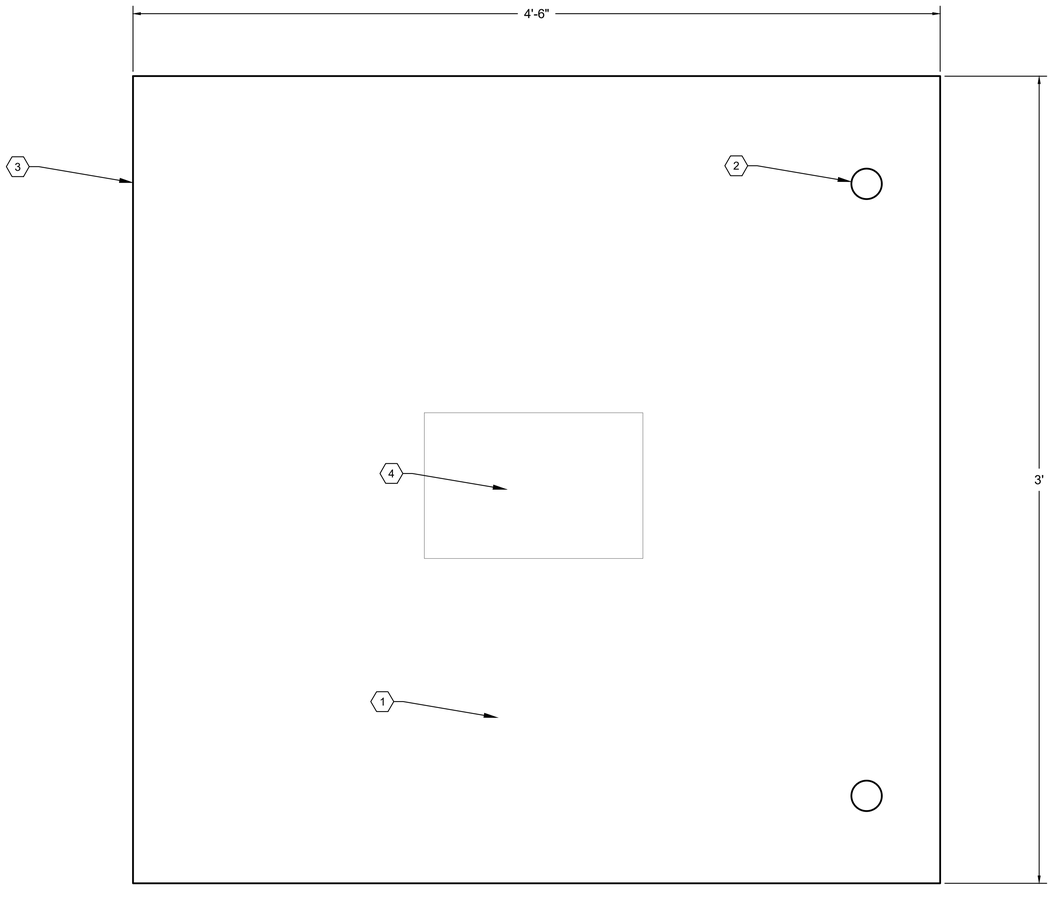

FRONT VIEW

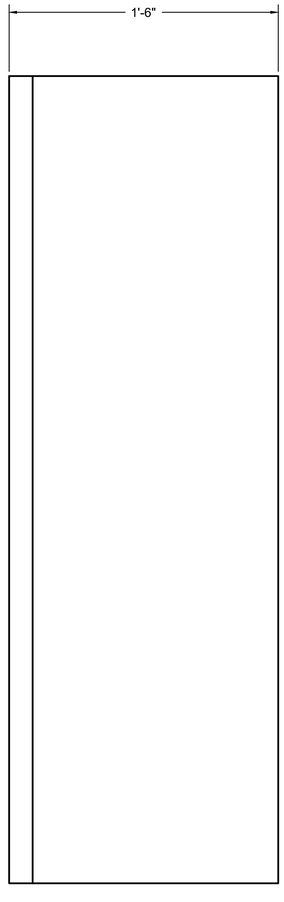

SIDE VIEW

EXISTING DECHLORINATION PLC PANEL ENCLOSURE

DETAIL A
SCALE: NTS -

NO.	DATE	REVISION	APP.

MBROH ENGINEERING
11757 KATY FWY,
SUITE 625
HOUSTON, TX 77077
713-468-2545

SURVEYED BY:

FB NO.

THESE DOCUMENTS ARE FOR INTERIM REVIEW AND ARE NOT INTENDED FOR CONSTRUCTION, BIDDING, OR PERMIT PURPOSES.

HANS POURES

TEXAS P.E. NO. 131630

DATE: 11/6/2026

CITY OF HOUSTON
HOUSTON PUBLIC WORKS

WHITE OAKS WWTP IMPROVEMENTS

INSTRUMENTATION

EXISTING DECHLORINATION PLC PANEL ENCLOSURE

WBS NUMBER	FOR CITY OF HOUSTON USE ONLY
R-000265-0158-3	
DRAWING SCALE	
NONE	
CITY OF HOUSTON PM	
SHAHIDUR RAHMAN, PE	
SHEET NO. 182 OF 189	

I-09

PLOTTED: 06/11/2026

PLOT STYLE: ----

FILE PATH: P:\Projects\0106 - City Of Houston\20031 - White Oak WWTP Phase II\4.0 CAD\4.3 I&C\I-09 DECHLORINATION PLC PANEL ENCLOSURE.dwg

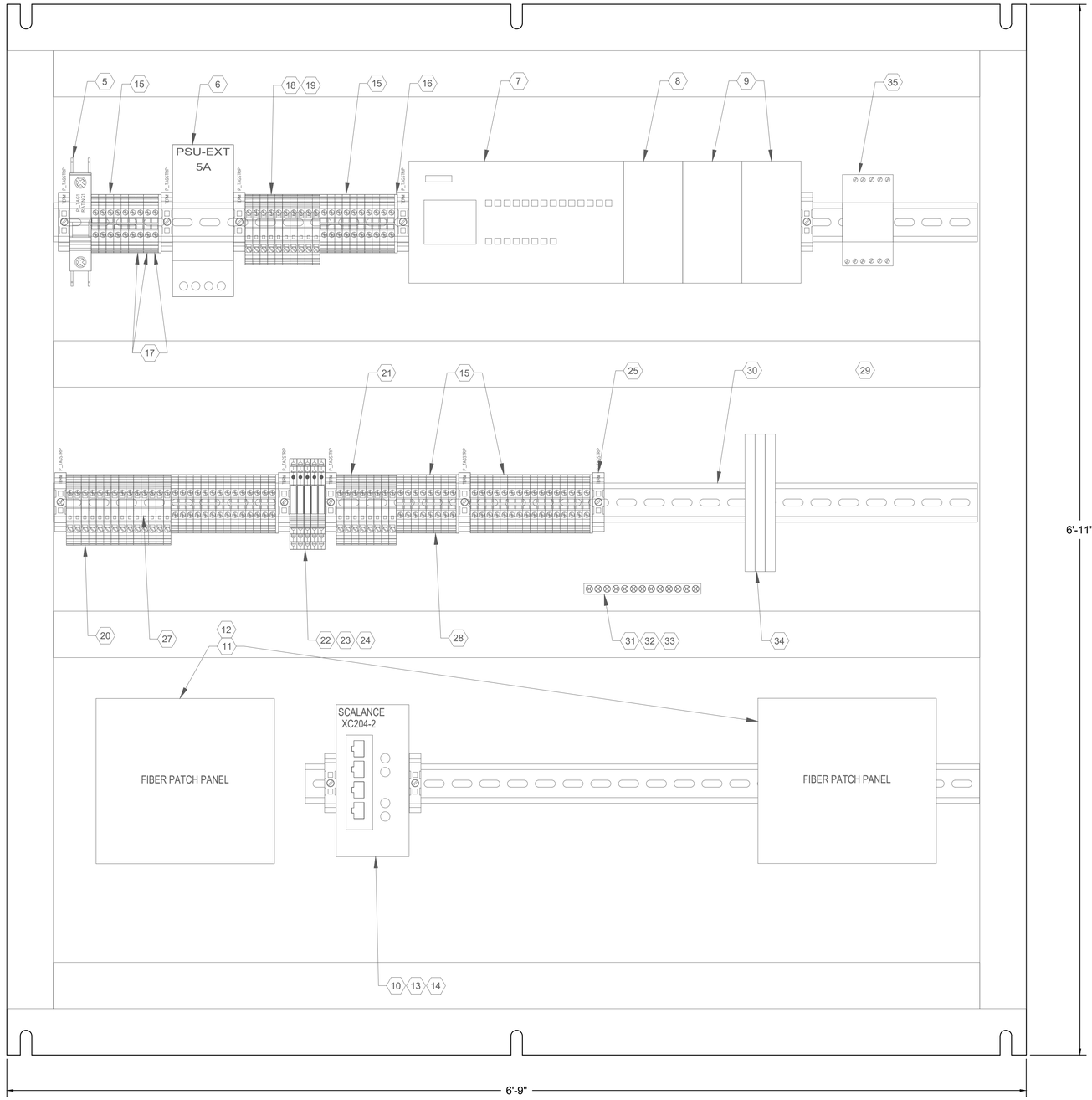

EXISTING EXISTING DECHLORINATION PLC PANEL LAYOUT

DETAIL B
SCALE: NTS -

NOTES BY SYMBOL "⬡":

DECHLORINATION PLC PANEL BOM:

ITEM	QTY.	DESCRIPTION	PART NO.	MANUFACTURER
NEW:				
1	1	36" X 36" X 12" SS WALLMOUNT ENCLOSURE - WM363612N4	8017602	RITTAL
2	2	QUARTER TURN THUMB LATCH, SS	WMQTPLS6	RITTAL
3	1	WALLMOUNT BRACKET SET, SS	WMSMB6	RITTAL
EXISTING:				
4	1	TP900 COMFORT HMI PANEL	6AV2-124-0JC01-0AX0	SIEMENS
5	1	MINIATURE CIRCUIT BREAKER 1-POLE 5A	5SJ4111-7HG40	SIEMENS
6	1	POWER SUPPLY, 24VDC OUT, 5A	6EP1333-2BA20	SIEMENS
7	1	CPU 1214C, DC POWER, 14 DC DI, 10 RO	6ES7-214-1HG40-0XB0	SIEMENS
8	1	SM 1231, 8 ANALOG INPUT MODULE	6ES7-231-4HF32-0XB0	SIEMENS
9	2	SM 1232, 4 ANALOG OUTPUT MODULE	6ES7-232-4HD32-0XB0	SIEMENS
10	1	X204-2 IND ETHERNET SWITCH, 4 RJ45, 2 FO-ST	6GK5-204-2BB10-2AA3	SIEMENS
11	2	SINGLE-PANEL FIBER OPTIC PATCH PANEL	SHP-01P	CORNING
12	1	FIBER OPTIC SIX PACK, MULTIMODE ST	CCH-CP06-15T	CORNING
13	2	ETHERNET CABLE, RJ45, 3-FT	CBL-CAT5-003	AWC
14	2	FIBER OPTIC CABLE, MULTIMODE, ST, 3-FT	CBL-2STST-003	AWC
15	52	FEED-THROUGH TERMINAL BLOCK - UT 4	3044102	PHOENIX CONTACT
16	5	END COVER FOR UT 4 - D-UT 2,5/10	3047028	PHOENIX CONTACT
17	3	GROUND MODULAR TERMINAL BLOCK - UT 4-PE	3044128	PHOENIX CONTACT
18	35	FUSE MODULAR TERMINAL BLOCK - UT 4-HESILED24 (5X20)	3046090	PHOENIX CONTACT
19	10	2.5A FUSE (5X20) FOR 24VDC	FUSE-2.5A	LITTLE FUSE
20	14	0.25A FUSE (5X20) FOR TBDI	FUSE-0.25A	LITTLE FUSE
21	8	0.063A FUSE (5X20) FOR TBAI	FUSE-0.063A	LITTLE FUSE
22	5	PLC RELAY 24VDC - PLC-RSC- 24DC/ 1/ACT - (DQ)	2966210	PHOENIX CONTACT
23	1	PLC RELAY JUMPER BRIDGE, BLUE - FBST 500-PLC BU	2966692	PHOENIX CONTACT
24	1	PLC RELAY JUMPER BRIDGE, RED - FBST 500-PLC RD	2966786	PHOENIX CONTACT
25	12	END BLOCK	0800886	PHOENIX CONTACT
26	6	TERMINAL BLOCK MARKER, KLM-A	1004348	PHOENIX CONTACT
27	3	BRIDGE BAR: 10-POSITION, RED	3030271	PHOENIX CONTACT
28	10	TB MARKERS FOR UT4 STYLE TBS	0828736	PHOENIX CONTACT
29	18'	1-1/2" X 3" WIREWAY (SOLD IN 6' INCREMENTS)	T1-1530G	IBOCO
30	2	DIN RAIL (SOLD IN 2 METER INCREMENTS)	0801733	PHOENIX CONTACT
31	1	GROUND BAR 3MM X 10 MM LENGTH: 1000 MM	402174	SIEMENS
32	8	GROUND BAR CONNECTION TERMINAL	404017	SIEMENS
33	2	GROUND BAR SUPPORT BRACKET	404428	SIEMENS
34	3	MINI MCR-2-UNI-UI-2UI - INPUT SIGNAL CONDITIONER	2905026	PHOENIX CONTACT
35	1	INDUSTRAL RELAY DC24V		COMAT RELECO

NO.	DATE	REVISION	APP.

MBROH 20 ENGINEERING
11757 KATY FWY,
SUITE 625
HOUSTON, TX 77077
713-468-2545

SURVEYED BY:
FB NO.

THESE DOCUMENTS ARE FOR INTERIM REVIEW AND ARE NOT INTENDED FOR CONSTRUCTION, BIDDING, OR PERMIT PURPOSES.
HANS POURES
TEXAS P.E. NO. 131630
DATE: 11/6/2026

CITY OF HOUSTON
HOUSTON PUBLIC WORKS

WHITE OAKS WWTP IMPROVEMENTS

INSTRUMENTATION
EXISTING DECHLORINATION PLC PANEL LAYOUT

WBS NUMBER	FOR CITY OF HOUSTON USE ONLY
R-000265-0158-3	
DRAWING SCALE	
NONE	
CITY OF HOUSTON PM	
SHAHIDUR RAHMAN, PE	
SHEET NO. 183 OF 189	

I-10

PLOTTED: 06/11/2026
PLOT STYLE: ----
FILE PATH: P:\Projects\0106 - City Of Houston\20031 - White Oak WWTP Phase II\4.0 CAD\4.3 I&C\I-10 EXISTING DECHLORINATION PLC PANEL LAYOUT.dwg

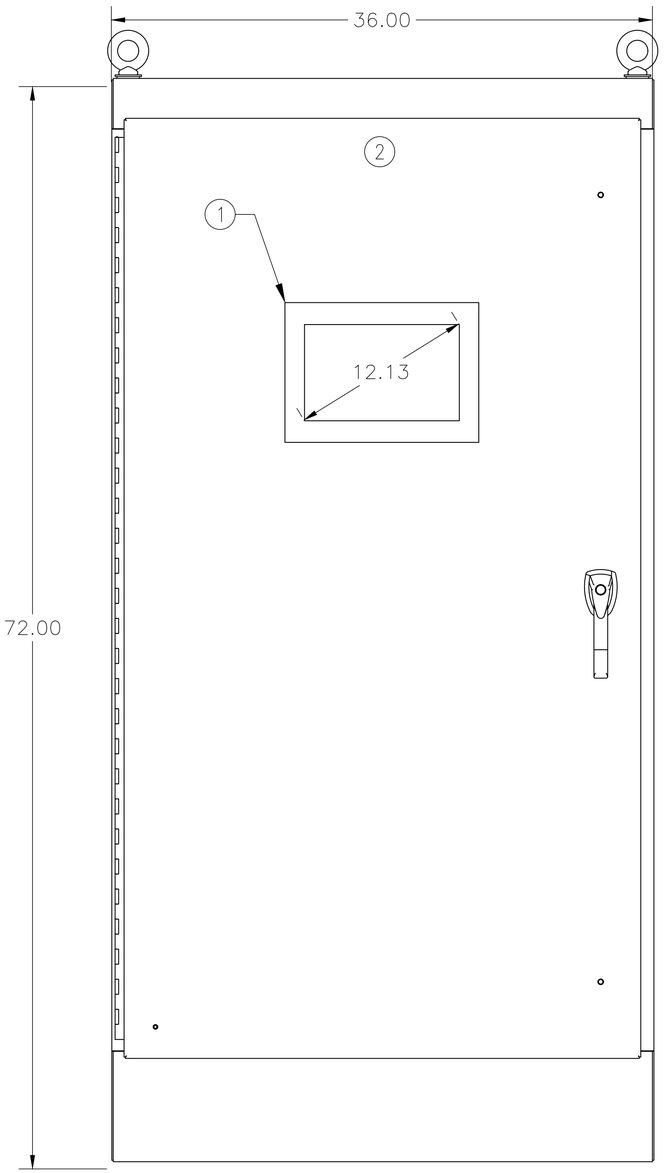

WAS PUMP PLC PANEL ENCLOSURE

DETAIL A
SCALE: NTS -

NO.	DATE	REVISION	APP.

NOTES BY SYMBOL "⬡":

NOTES:

1. SIMATIC HMI MTP1200 UNIFIED COMFORT PANEL (6AV2128-3MB06-0AX112) OR VENDOR APPROVED EQUAL
2. BASIS OF DESIGN: HAMMOND HN4FS723624S16, SUBJECT TO ENGINEER APPROVAL AS AN EQUAL, OR ENGINEER-APPROVED EQUAL.

CONTRACTOR SHALL FURNISH AND INSTALL A 72" H × 36" W × 24" D, NEMA 4X, TYPE 316 STAINLESS STEEL, FREE-STANDING CONTROL PANEL ENCLOSURE WITH FRONT ACCESS ONLY AND A FACTORY-INSTALLED, KEY-LOCKING THREE-POINT LATCHING MECHANISM. ENCLOSURE SHALL COMPLY WITH SECTION 40 67 00 – PROCESS CONTROL PANELS AND HARDWARE, INCLUDING ALL APPLICABLE CONSTRUCTION, DOOR HARDWARE, MOUNTING, BASE, AND ANCHORAGE REQUIREMENTS. ELEVATED FLOOR STANDS SHALL NOT BE PROVIDED UNLESS REQUIRED BY THE CONTRACT DOCUMENTS OR APPROVED BY THE ENGINEER. CONTRACTOR SHALL SUBMIT ENCLOSURE SHOP DRAWINGS AND PRODUCT DATA FOR ENGINEER REVIEW AND APPROVAL PRIOR TO PROCUREMENT.

MBROH 20 ENGINEERING
11757 KATY FWY,
SUITE 625
HOUSTON, TX 77077
713-468-2545

SURVEYED BY:
FB NO.

THESE DOCUMENTS ARE FOR INTERIM REVIEW AND ARE NOT INTENDED FOR CONSTRUCTION, BIDDING, OR PERMIT PURPOSES.
HANS POURES
TEXAS P.E. NO. 131630
DATE: 11/6/2026

CITY OF HOUSTON
HOUSTON PUBLIC WORKS

WHITE OAKS WWTP IMPROVEMENTS

INSTRUMENTATION
WAS PUMP PLC
PANEL ENCLOSURE

WBS NUMBER	FOR CITY OF HOUSTON USE ONLY
R-000265-0158-3	
DRAWING SCALE	
NONE	
CITY OF HOUSTON PM	
SHAHIDUR RAHMAN, PE	

I-11 SHEET NO. 184 OF 189

PLOTTED: 06/11/2026
PLOT STYLE: ----
FILE PATH: P:\Projects\0106 – City Of Houston\20031 – White Oak WWTP Phase II\4.0 CAD\4.3 I&C\I-11 WAS PUMP PLC PANEL ENCLOSURE.dwg

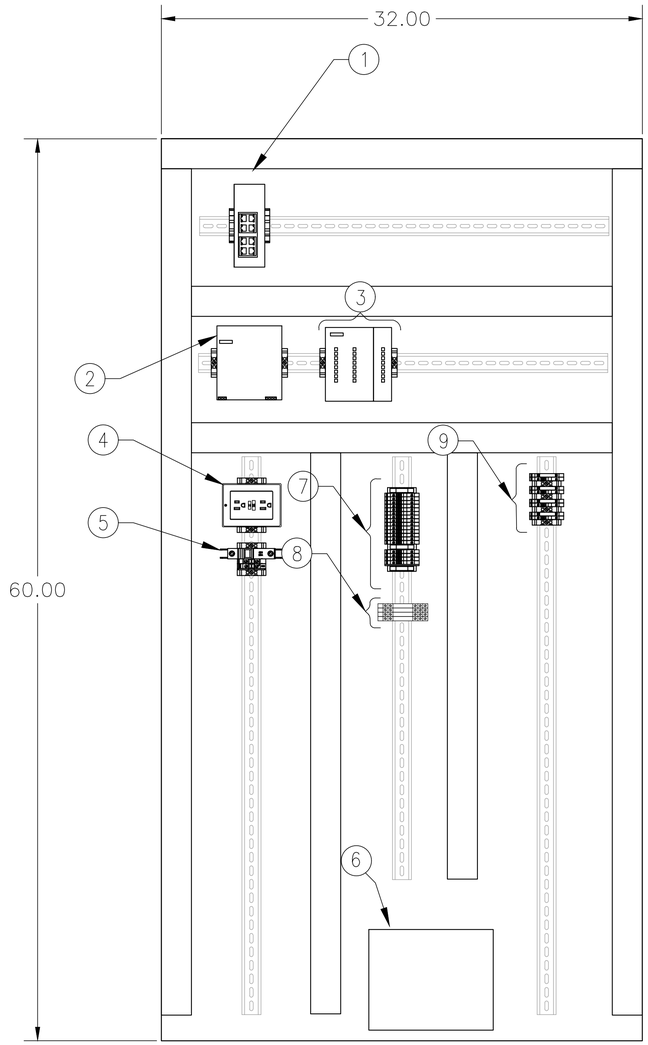

WAS PUMP PLC PANEL LAYOUT

DETAIL A
SCALE: NTS -

NOTES:

1. 8-PORT SWITCH (SCALANCE XC208)
2. EXTERNAL POWER SUPPLY 10A (SIEMENS 6EP1334-2AA01)
3. SIMATIC S7-1200 G2 CPU 1214C, DC/DC/DC, 24 VDC SUPPLY, 14 DI, 10 TRANSISTOR DO (6ES7214-1AH50-0XB0)

   I/O MODULES:
   1 X DI - SB 1221, 8 DI × 24 VDC, SIGNAL BOARD (6ES7221-3BF50-0XB0) - INSTALLED IN THE CPU HOUSING

   1 X AI - SM 1231, 8 AI × 14-BIT, V/I: ±10/±5/±2.5 V, 0-20/4-20 MA (6ES7231-4HF50-0XB0)

4. GFCI
5. MAIN CIRCUIT BREAKER
6. UPS: PHOENIX CONTACT TRIO-UPS-2G/1AC/1AC/120V/750VA (2905908), 750 VA / 600 W, 120 VAC INPUT/OUTPUT, WITH INTEGRATED BATTERY, OR APPROVED EQUAL.

   CONTRACTOR SHALL VERIFY UPS LOADING, BATTERY RUNTIME, AND COMPLIANCE WITH SECTION 13335. PROVIDE 15 MINUTES OF BACKUP AT 125% OF CALCULATED LOAD AND 30 MINUTES AT HALF-LOAD. SUBMIT ALL PROPOSED DEVIATIONS FOR ENGINEER APPROVAL PRIOR TO PROCUREMENT
7. DIGITAL INPUTS TERMINAL STRIP
8. DIGITAL OUTPUT RELAYS TERMINAL STRIP
9. ANALOG INPUT TERMINAL STRIP

NO.	DATE	REVISION	APP.

MBROH ENGINEERING
11757 KATY FWY,
SUITE 625
HOUSTON, TX 77077
713-468-2545

SURVEYED BY:
FB NO.

THESE DOCUMENTS ARE FOR INTERIM REVIEW AND ARE NOT INTENDED FOR CONSTRUCTION, BIDDING, OR PERMIT PURPOSES.
HANS POURES
TEXAS P.E. NO. 131630
DATE: 11/6/2026

CITY OF HOUSTON
HOUSTON PUBLIC WORKS

WHITE OAKS WWTP IMPROVEMENTS

INSTRUMENTATION
WAS PUMP PLC
PANEL LAYOUT

WBS NUMBER	FOR CITY OF HOUSTON USE ONLY
R-000265-0158-3	
DRAWING SCALE	
NONE	
CITY OF HOUSTON PM	
SHAHIDUR RAHMAN, PE	

I-12 SHEET NO. 185 OF 189

PLOTTED: 06/11/2026
PLOT STYLE: ----
FILE PATH: P:\Projects\0106 - City Of Houston\20031 - White Oak WWTP Phase II\4.0 CAD\4.3 I&C\I-12 WAS PUMP PLC PANEL LAYOUT.dwg

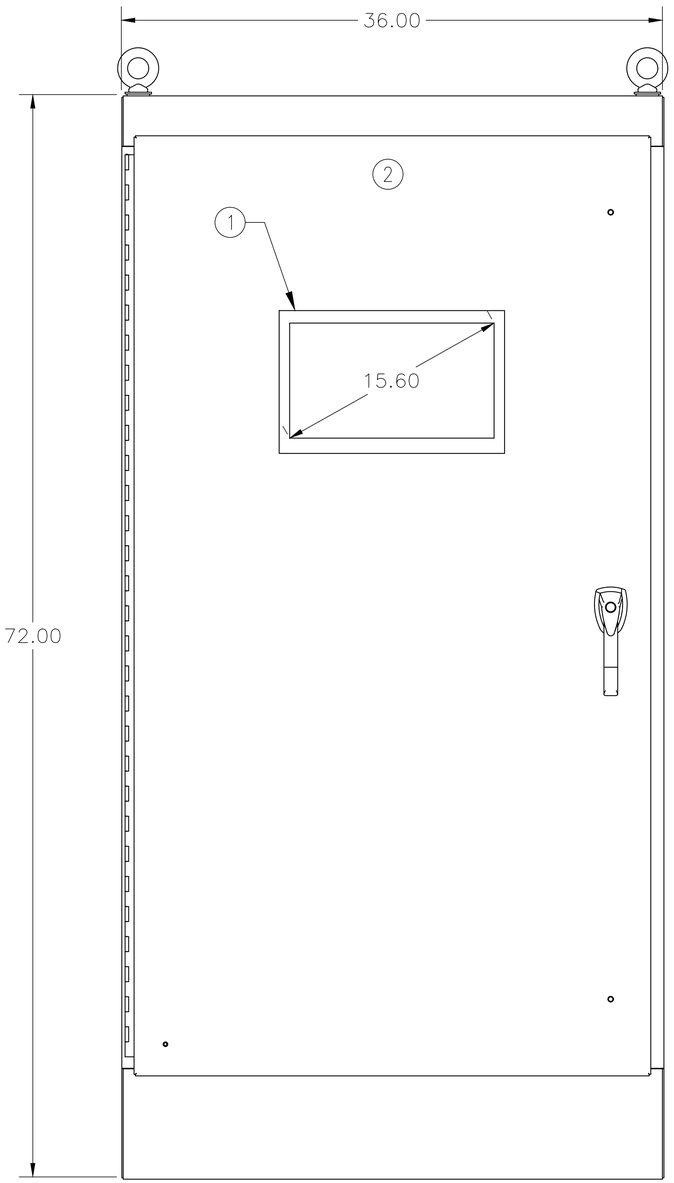

BLOWER MASTER PLC PANEL ENCLOSURE

DETAIL A
SCALE: NTS -

NOTES:

1. SIEMENS SIMATIC HMI MTP1500 UNIFIED COMFORT PANEL (6AV2128-3QB06-0AX1)
2. BASIS OF DESIGN: HAMMOND HN4FS723624S16, SUBJECT TO ENGINEER APPROVAL AS AN EQUAL, OR ENGINEER-APPROVED EQUAL.

   CONTRACTOR SHALL FURNISH AND INSTALL A 72" H × 36" W × 24" D, NEMA 4X, TYPE 316 STAINLESS STEEL, FREE-STANDING CONTROL PANEL ENCLOSURE WITH FRONT ACCESS ONLY AND A FACTORY-INSTALLED, KEY-LOCKING THREE-POINT LATCHING MECHANISM. ENCLOSURE SHALL COMPLY WITH SECTION 40 67 00 – PROCESS CONTROL PANELS AND HARDWARE, INCLUDING ALL APPLICABLE CONSTRUCTION, DOOR HARDWARE, MOUNTING, BASE, AND ANCHORAGE REQUIREMENTS. ELEVATED FLOOR STANDS SHALL NOT BE PROVIDED UNLESS REQUIRED BY THE CONTRACT DOCUMENTS OR APPROVED BY THE ENGINEER. CONTRACTOR SHALL SUBMIT ENCLOSURE SHOP DRAWINGS AND PRODUCT DATA FOR ENGINEER REVIEW AND APPROVAL PRIOR TO PROCUREMENT.

NO.	DATE	REVISION	APP.

MBROH ENGINEERING 20
11757 KATY FWY,
SUITE 625
HOUSTON, TX 77077
713-468-2545

SURVEYED BY:
FB NO.

THESE DOCUMENTS ARE FOR INTERIM REVIEW AND ARE NOT INTENDED FOR CONSTRUCTION, BIDDING, OR PERMIT PURPOSES.
HANS POURES
TEXAS P.E. NO. 131630
DATE: 11/6/2026

CITY OF HOUSTON
HOUSTON PUBLIC WORKS

WHITE OAKS WWTP IMPROVEMENTS

INSTRUMENTATION
BLOWER MASTER PLC PANEL ENCLOSURE

WBS NUMBER	FOR CITY OF HOUSTON USE ONLY
R-000265-0158-3	
DRAWING SCALE	
NONE	
CITY OF HOUSTON PM	
SHAHIDUR RAHMAN, PE	

PLOTTED: 06/11/2026
PLOT STYLE: ----
FILE PATH: P:\Projects\0106 - City Of Houston\20031 - White Oak WWTP Phase II\4.0 CAD\4.3 I&C\I-13 BLOWER MASTER PLC PANEL ENCLOSURE.dwg

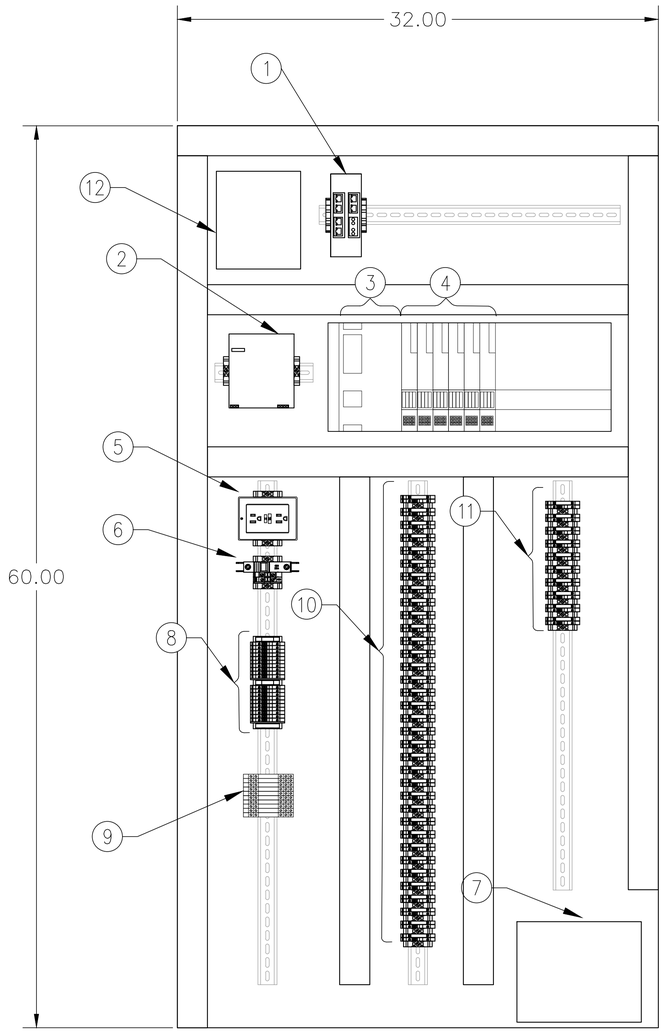

BLOWER MASTER PLC PANEL LAYOUT

DETAIL A
SCALE: NTS -

NOTES:

1. FO SWITCH SCALANCE XC206-2 (6GK5206-2GS00-2AC2)
   SFP992-1 MULTIMODE SFP TRANSCEIVER (PROPER FOR 62.5/125 UM MULTIMODE FIBER CABLE) (6GK5992-1AL00-8AA0)
2. EXTERNAL POWER SUPPLY 10A (SIEMENS 6EP1334-2AA01)
3. SIEMENS S7-1500 SERIES PLC (6ES7515-2AN03-0AB0)
   MEMORY CARD 12MB (6ES7954-8LE04-0AA0)
4. I/O MODULES
   3 AI 16×I BA, 16-BIT (6ES7531-7MH00-0AB0)
   1 AO 8×U/I HS, 16-BIT (6ES7532-5HF00-0AB0)
   1 DI 32×24 VDC BA (6ES7521-1BL10-0AA0)
   1 DO 8×24 VDC /2A HF, TRANSISTOR (6ES7522-1BL00-0AB0)
5. GFCI
6. MAIN CIRCUIT BREAKER
7. UPS: PHOENIX CONTACT TRIO-UPS-2G/1AC/1AC/120V/750VA (2905908), 750 VA / 600 W, 120 VAC INPUT/OUTPUT, WITH INTEGRATED BATTERY, OR APPROVED EQUAL.

   CONTRACTOR SHALL VERIFY UPS LOADING, BATTERY RUNTIME, AND COMPLIANCE WITH SECTION 13335. PROVIDE 15 MINUTES OF BACKUP AT 125% OF CALCULATED LOAD AND 30 MINUTES AT HALF-LOAD. SUBMIT ALL PROPOSED DEVIATIONS FOR ENGINEER APPROVAL PRIOR TO PROCUREMENT.
8. DIGITAL INPUTS TERMINAL STRIP
9. DIGITAL OUTPUT RELAYS TERMINAL STRIP
10. ANALOG INPUTS TERMINAL STRIP
11. ANALOG OUTPUTS TERMINAL STRIP
12. SINGLE-PANEL FIBER OPTIC PATCH PANEL (SHP-01P)

NO.	DATE	REVISION	APP.

MBROH 20 ENGINEERING
11757 KATY FWY,
SUITE 625
HOUSTON, TX 77077
713-468-2545

SURVEYED BY:
FB NO.

THESE DOCUMENTS ARE FOR INTERIM REVIEW AND ARE NOT INTENDED FOR CONSTRUCTION, BIDDING, OR PERMIT PURPOSES.
HANS POURES
TEXAS P.E. NO. 131630
DATE: 11/6/2026

CITY OF HOUSTON
HOUSTON PUBLIC WORKS

WHITE OAKS WWTP IMPROVEMENTS

INSTRUMENTATION
BLOWER MASTER PLC
PANEL LAYOUT

WBS NUMBER	FOR CITY OF HOUSTON USE ONLY
R-000265-0158-3	
DRAWING SCALE	
NONE	
CITY OF HOUSTON PM	
SHAHIDUR RAHMAN, PE	
I-14	SHEET NO. 187 OF 189

PLOTTED: 06/11/2026
PLOT STYLE: ----
FILE PATH: P:\Projects\0106 - City Of Houston\20031 - White Oak WWTP Phase II\4.0 CAD\4.3 I&C\I-14 BLOWER MASTER PLC PANEL LAYOUT.dwg

PLOTTED: 06/11/2026
PLOT STYLE: ----
FILE PATH: P:\Projects\0106 - City Of Houston\20031 - White Oak WWTP Phase II\4.0 CAD\4.3 I&C\I-15 INSTALLATION DETAILS I.dwg

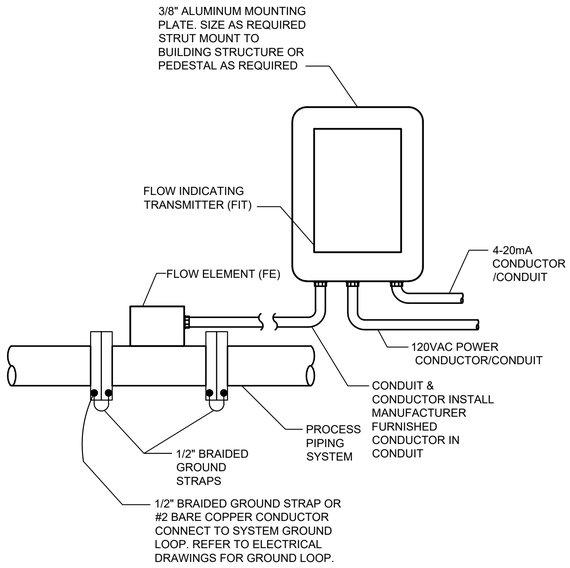

MAG FLOWMETER MOUNTING

DETAIL 1 / SCALE: NTS -

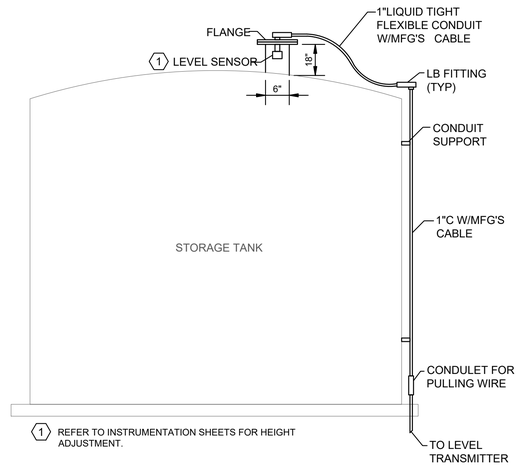

LEVEL PRIMARY ELEMENT MOUNTING

DETAIL 2 / SCALE: NTS -

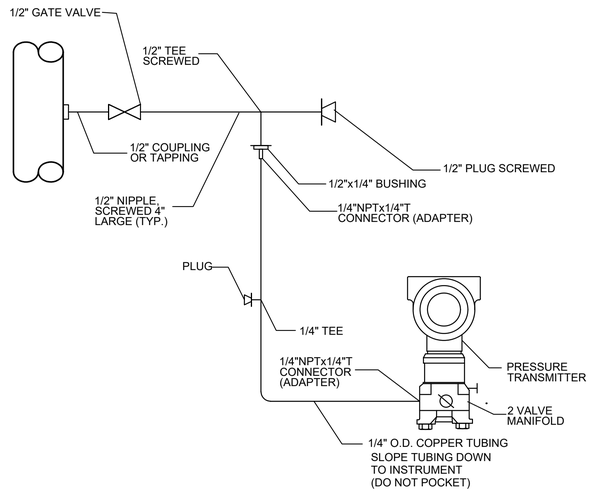

PRESSURE INDICATION TRANSMITTER

DETAIL 3 / SCALE: NTS -

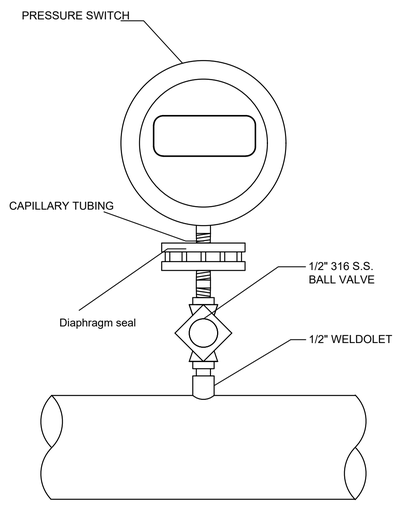

PRESSURE SWITCH WITH DIAPHRAGM SEAL

DETAIL 4 / SCALE: NTS -

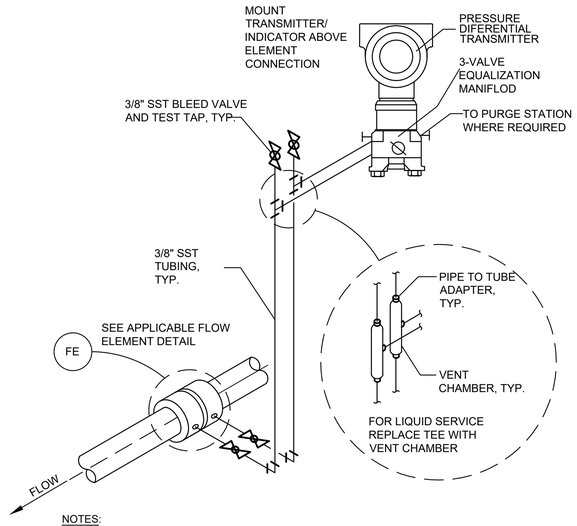

NOTES:

1. FOR LIQUID SERVICE, SLOPE ALL LINES UPWARD TOWARD VENT CHAMBER.
2. ALL LINES SHALL HAVE A CONTINUOUS SLOPE OF 1/4" PER FOOT MIN. (1" PER FOOT PREFERRED).

PRESSURE DIFFERENTIAL TRANSMITTER

DETAIL 5 / SCALE: NTS -

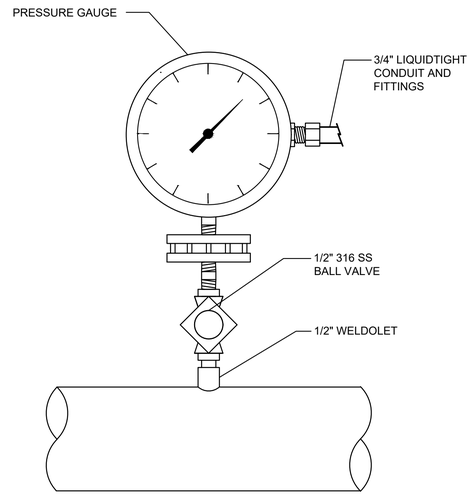

PRESSURE GAUGE WITH DIAPHRAGM SEAL

DETAIL 6 / SCALE: NTS -

NO.	DATE	REVISION	APP.

MBROH ENGINEERING 20
11757 KATY FWY,
SUITE 625
HOUSTON, TX 77077
713-468-2545

SURVEYED BY:
FB NO.

THESE DOCUMENTS ARE FOR INTERIM REVIEW AND ARE NOT INTENDED FOR CONSTRUCTION, BIDDING, OR PERMIT PURPOSES.
HANS POURES
TEXAS P.E. NO. 131630
DATE: 10/1/2026

CITY OF HOUSTON
HOUSTON PUBLIC WORKS

WHITE OAKS WWTP IMPROVEMENTS

INSTRUMENTATION INSTALLATION DETAILS I

WBS NUMBER	FOR CITY OF HOUSTON USE ONLY
R-000265-0158-3	
DRAWING SCALE	
NONE	
CITY OF HOUSTON PM	
SHAHIDUR RAHMAN, PE	

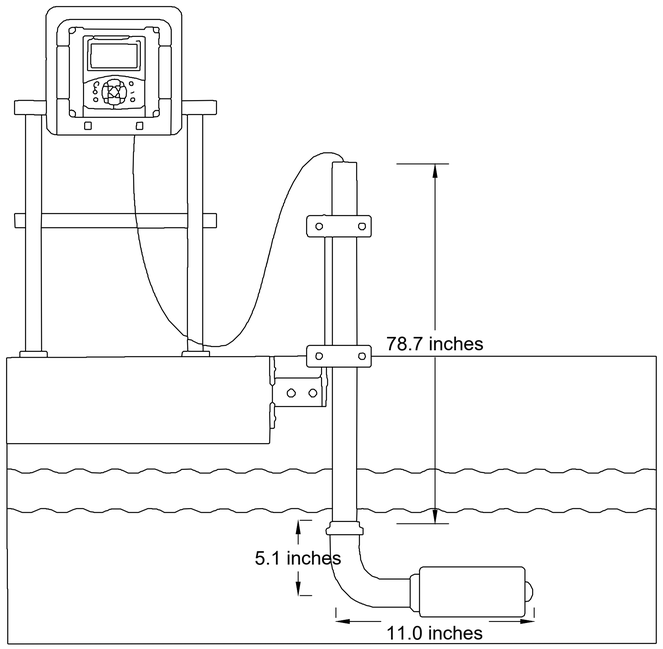

TSS ANALYZER SENSOR FOR INMERSION INSTALLATION

DETAIL 7 / - SCALE: NTS

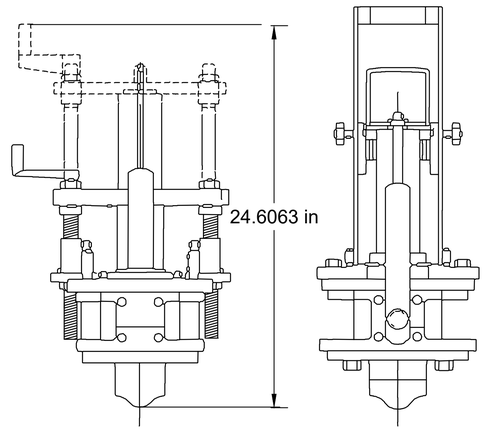

TSS ANALYZER SENSOR FOR INLINE INSTALLATION

DETAIL 8 / - SCALE: NTS

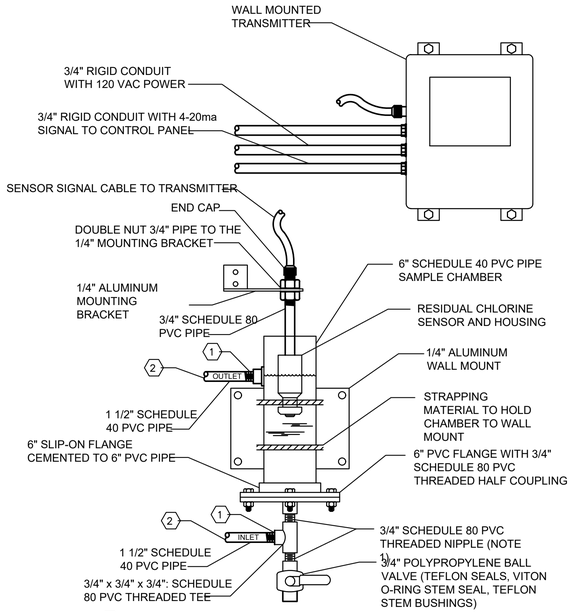

NOTES BY SYMBOL ⬡ ":

1. ALL THREADED CONNECTIONS SHOULD BE WRAPPED WITH TEFLON TAPE.
2. THE FLOW CHAMBER SHOULD NOT SUPPORT THE INLET AND OUTLET PIPING. PROVIDE REQUIRED ELBOWS AND MOUNTING BRACKETS TO MOUNT THE PIPE ON THE WALL.

CHLORINE ANALYZER SENSOR INSTALLATION

DETAIL 9 / - SCALE: NTS

NO.	DATE	REVISION	APP.

MBROH ENGINEERING 20
11757 KATY FWY,
SUITE 625
HOUSTON, TX 77077
713-468-2545

SURVEYED BY:

FB NO.

THESE DOCUMENTS ARE FOR INTERIM REVIEW AND ARE NOT INTENDED FOR CONSTRUCTION, BIDDING, OR PERMIT PURPOSES.

HANS POURES

TEXAS P.E. NO. 131630

DATE: 10/1/2026

CITY OF HOUSTON
HOUSTON PUBLIC WORKS

WHITE OAKS WWTP IMPROVEMENTS

INSTRUMENTATION INSTALLATION DETAILS II

WBS NUMBER	FOR CITY OF HOUSTON USE ONLY
R-000265-0158-3	
DRAWING SCALE	
NONE	
CITY OF HOUSTON PM	
SHAHIDUR RAHMAN, PE	

I-16 SHEET NO. 189 OF 189

PLOTTED: 06/11/2026
PLOT STYLE: ----
FILE PATH: P:\Projects\0106 - City Of Houston\20031 - White Oak WWTP Phase II\4.0 CAD\4.3 I&C\I-16 INSTALLATION DETAILS II.dwg